Model	Year	MG	SG	Illustration	Restrictions	Update	10:44	06.04.2005	PORSCHE PET PORSCHE
924	79	0	01	1-00		187			

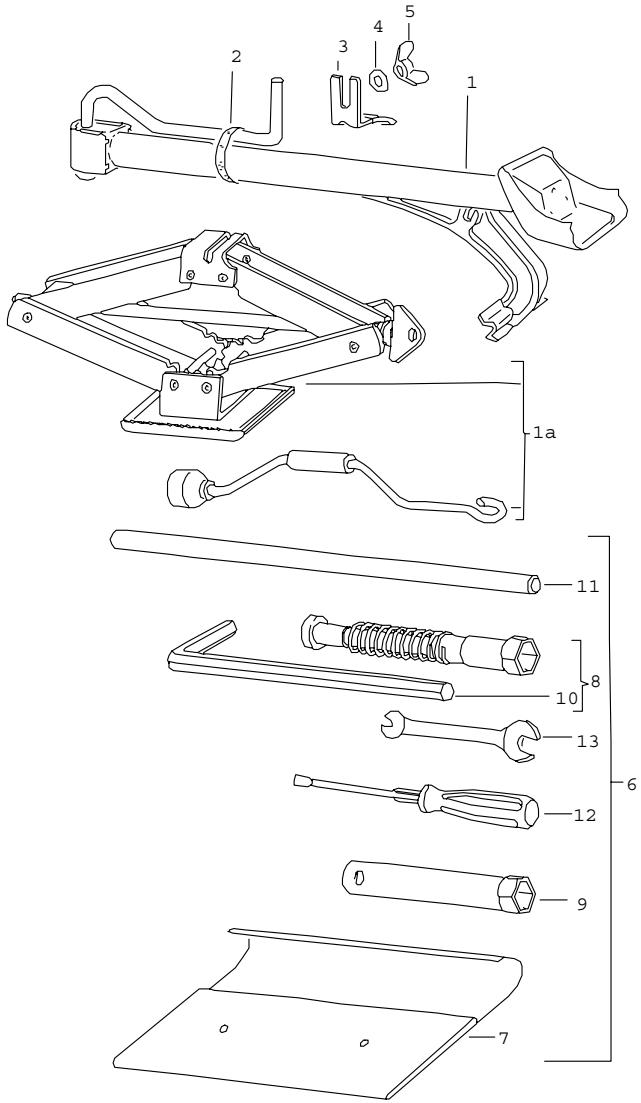

Pos	Part Number	Name	Remarks	Qty	Model
		accessories			
1	477 011 033	scissors type jack F >>92481 05899		1	
2	E 803 011 245	ring		1	
3	E 477 813 555	support		1	
4	E N 011 696 1	washer		1	
5	E N 011 175 1	winged nut M 8		1	
1A	477 011 033	scissors type jack F 92481 05900>>		1	
-	944 721 027 05	tool bag with contents comprising:		1	
		tool bag		1	
-	477 012 233	spark plug wrench		1	
		rim wrench		1	
		operating rod for rim wrench		1	
		double-end spanner 10 X 13		1	
		handle		1	
		insert for cross-recess screw and slotted screw		1	
		universal pliers		1	
-	928 361 311 00	hook for cover wheel nut		1	
		- -- E N D -- -			

Model	Year	MG	SG	Illustration	Restrictions	Update		
924	79	0	01	1-05		187	10:44	06.04.2005

Pos	Part Number	Name	Remarks	Qty	Model
		stickers			
-	477 000 257 C	sticker tyre pressure 165 - HR 14	-77	1	924
-	E 477 000 257 F	sticker tyre pressure 165 - HR 14	78	1	924
-	E 477 000 177	sticker tyre pressure 165 - HR 14	-78	1	924 (AUS)
-	477 000 257 G	sticker tyre pressure 185/70 - HR 14		1	924
-	E 477 000 179	sticker tyre pressure 185/70 - HR 14	-78	1	924 (AUS)
-	477 000 179 A	sticker tyre pressure 185/70 - HR 14	79	1	924 (AUS)
-	937 701 127 00	sticker tyre pressure 185/70 - VR 15		1	TURBO
-	911 701 137 01	sticker emergency wheel		1	
-	477 000 269	sticker bleeding		1	924
-	477 000 269 A	sticker bleeding		1	924 (F)
-	477 000 269 C	sticker bleeding		1	TURBO
-	477 000 269 B	sticker bleeding		1	TURBO (F)
-	411 000 263 A	sticker octane number		1	
-	477 000 285	sticker TSZ ignition switch unit		1	
-	477 000 255 A	sticker ignition point		1	TURBO
-	477 000 275 F	sticker engine specifications	-78	1	924 (S)
-	477 000 275 F	sticker engine specifications	79	1	924 (S)

Model	Year	MG	SG	Illustration	Restrictions	Update		
924	79	0	01	1-05		187	10:44	06.04.2005

Pos	Part Number	Name	Remarks	Qty	Model
-	E 477 000 279	sticker engine specifications		1	924 (AUS)
-	477 000 275 D	sticker		1	TURBO (S)
		- -- E N D -- -			

Model	Year	MG	SG	Illustration	Restrictions	Update		
924	79	0	02	2-00		187	10:45	06.04.2005

Pos	Part Number	Name	Remarks	Qty	Model
		accessories			
-	477 253 191 B	ornamental exhaust pipe round black		1	924
-	E 477 698 153 A	installation set widening of track 15 MM for rear axle only together with alloy wheel 4- hole		1	924
-	477 601 103 C	spacer ring 15 MM		2	
-	914 361 315 01	wheel bolt		8	
-	999 571 045 02	rim wrench		1	
-	E 477 698 154	installation set widening of track 28 MM for rear axle only together with alloy wheel 4- hole		1	924
-	477 601 093	spacer ring 28 MM		2	
-	999 182 003 36	wheel nut		8	
-	999 571 045 02	rim wrench		1	
-	904 341 671 00	wheel bolt		8	924
-	E 477 821 805	mud flap 1 set		1	
-	477 821 161 A	mud flap	/L	1	
-	477 821 162 A	mud flap	/R	1	
-	N 010 264 4	hexagon-head bolt M 5 X 20		6	
-	N 011 692 3	washer		6	
-	N 012 005 3	lock ring B 5		6	
-	N 011 005 14	hexagon nut M 5		6	
		snow chains			

Model	Year	MG	SG	Illustration	Restrictions	Update		
924	79	0	02	2-00		187	10:45	06.04.2005

Pos	Part Number	Name	Remarks	Qty	Model
-	911 361 909 00	snow chains 1 set for 185/70 HR 14 vertical seat adjustment		1	
-	911 521 493 00	spacer		X	
-	900 067 089 02	pan-head screw M 6 X 25 for 13 MM elevation		X	
-	N 014 749 2	pan-head screw M 6 X 40 for 26 MM elevation		X	
-	E 477 091 025	ski rack bracket 1 set comprising:		1	
-	E 477 091 011	ski rack		1	
-	E 477 091 027	bracket with installation parts		1	
-	E 477 091 029	rubber holder		1	
-	E 477 091 025 A	ski rack lockable		1	
-	477 091 035	roof rack surfboard support trailer coupling		1	
-	E 477 800 805 D	trailer coupling installation set not for (USA),(CDN)		1	
-	E 477 800 805 E	trailer coupling installation set not for (USA),(CDN)		1	M 058
-	928 006 901 00	sticker drawbar load not for (USA),(CDN)		1	924
-	111 919 209 A	indicator light		1	
-	900 631 129 90	bulb		1	
-	431 953 231	relay		1	

Model	Year	MG	SG	Illustration	Restrictions	Update		
924	79	0	02	2-00		187	10:45	06.04.2005

Pos	Part Number	Name	Remarks	Qty	Model
-	477 863 539	luggage net		1	
-	E 477 905 245	installation set subsequent installation TSZ ignition control unit comprising:		1	924
-	E 477 971 074	harness		1	
-	046 905 351	switch unit		1	
-	900 028 007 02	spring washer		1	
-	900 143 046 02	tapping screw BZ 4,8 X 16		1	
-	046 905 105	ignition coil		1	
-	N 012 226 5	spring washer		1	
-	900 076 010 02	hexagon nut		1	
-	311 971 901	protection cap		1	
-	E 046 905 109	series resistor 0,4 OHM		1	
-	E 046 905 109 A	series resistor 0,6 OHM		1	
-	E N 014 121 2	oval-head screw M 6 X 4		1	
-	N 012 004 2	lock ring		1	
-	477 000 285	sticker TSZ ignition control unit		1	
-	477 905 206	distributor		1	
-	E 477 971 333	single line		1	
		- -- E N D -- -			

Model	Year	MG	SG	Illustration	Restrictions	Update		
924	79	0	03	3-00		187	10:45	06.04.2005

Pos	Part Number	Name	Remarks	Qty	Model
		radio accessories			
-	477 035 903	set installation parts for radio with antenna manual comprising:		1	
-	477 035 503 A	antenna		1	
-	E 059 035 267 A	condenser for ignition coil		1	
-	477 905 209 A	screening ring		1	
-	944 645 451 00	loudspeaker rear right		1	
-	E 477 035 411 C	loudspeaker rear left and front		2	
-	477 035 999	gasket loudspeaker rear		2	
-	N 013 962 2	tapping screw B 3,9 X 16		X	
-	999 507 071 00	speed nut B 3,9 X 11,6		X	
-	900 151 028 02	washer		X	
-	477 035 375	bush		X	
-	E 477 035 440 A	cable for loudspeaker rear right		1	
-	E 477 035 441	cable for loudspeaker rear left and front		1	
-	477 035 905	set installation parts for radio with automatic antenna comprising:		1	

Model	Year	MG	SG	Illustration	Restrictions	Update		
924	79	0	03	3-00		187	10:45	06.04.2005

Pos	Part Number	Name	Remarks	Qty	Model
-	> 944 645 911 00	automatic antenna		1	
-	111 971 511	line distributor		1	
-	E 059 035 267 A	condenser for ignition coil		1	
-	477 905 209 A	screening ring		1	
-	944 645 451 00	loudspeaker rear right		1	
-	E 477 035 411 C	loudspeaker rear left and front		2	
-	477 035 999	gasket loudspeaker rear		2	
-	N 013 962 2	tapping screw B 3,9 X 16		12	
-	999 507 071 00	speed nut B 3,9 X 11,6		X	
-	900 151 028 02	washer		X	
-	477 035 375	bush		1	
-	E 477 035 440 A	cable for loudspeaker rear right		1	
-	E 477 035 441	cable for loudspeaker rear left and front		1	
-	477 035 513	antenna rod for automatic antenna		1	
		- -- E N D -- -			

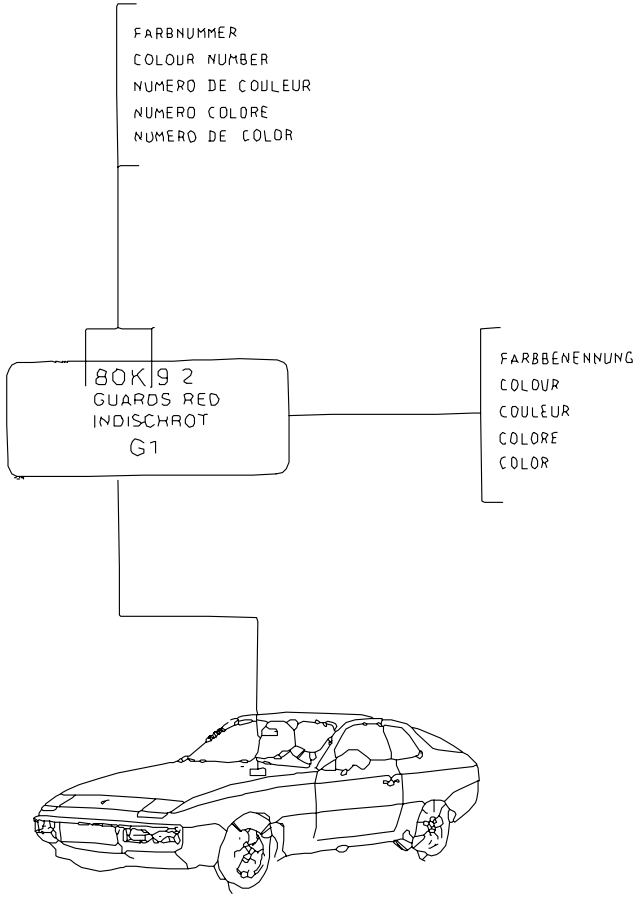

Pos	Part Number	Name	Remarks	Qty	Model
		lacquers basic materials			
-	911 096 050 00	polyester filler 1 KG GLASSIT-NON FERRO		X	
-	911 096 051 00	hardener 30 GR GLASSIT red		X	
-	911 096 052 00	primer filler 1 LTR GLASSOFIX		X	
-	911 096 053 00	hardener 500 ML GLASSOFIX		X	
-	911 096 054 00	primer filler 1 LTR GLASSODUR		X	
-	911 096 055 00	hardener 500 ML GLASSODUR		X	
-	911 096 056 00	wash primer GLASSOFIX 2K		X	
-	911 096 057 00	hardener 1 LTR GLASSOFIX		X	
-	911 096 058 00	polyurethane plastic putty		X	
-	911 096 059 00	hardener 1 KG		X	
-	911 096 060 00	thinner 1 LTR		X	
-	911 096 061 00	hardener 500 ML		X	
-	911 096 062 00	additional lacquer 1 LTR		X	
-	911 096 063 00	underbody protection 1 KG		X	
-	E L 016 006	nitro-cellulose thinner 2,5 L		X	
-	E 000 043 001 00	tin SN 90 % CA 200 G		X	

Pos	Part Number	Name	Remarks	Qty	Model
		final acrylic lacquer 1 L			
-	ALN 769 041	paint black		X	L 041
-	E ALN 769 62Y	signal green		X	L 62Y
-	ALN 769 31B	scarlet		X	L 31B
-	ALN 769 91Z	atlas white		X	L 91Z
-	ALN 769 87Z	maroon		X	L 87Z
-	ALN 769 10A	rally yellow		X	L 10A
-	E ALN 769 63Z	SPANISCHGRUEN		X	L 63Z
-	ALN 769 90A	polar white		X	L 90A
-	ALN 769 32A	brocade red		X	L 32A
-	ALN 769 93Z	white		X	L 93Z
-	ALN 769 30C	malaga red		X	L 30C
-	911 095 942 60	bitter chocolate		X	L 86A
	408				
-	ALN 769 90E	ALPINWEISS 78		X	L 90E
-	ALN 769 E1M	mexico beige		X	L E1M
-	ALN 769 M3A	guards red		X	L M3A
-	ALN 769 M9V	mocha black		X	L M9V
-	ALN 769 M7A	flieder		X	L M7A
		acrylic lacquer metallic 1 L			
-	LKL 098 Y00	ATLANTICBLAU		X	98Y
-	LKL 097 Y00	TIZIANBRAUN		X	97Y
-	E LKL 096 N00	peppermint ice		X	96N
-	LKL 097 A00	diamond silver metallic		X	97A
-	LKL 095 E00	reseda green		X	95E
-	LKL 095 F00	copper		X	95F
-	E LKL 096 Y00	malachite		X	96Y

Pos	Part Number	Name	Remarks	Qty	Model
-	LKL 099 F00	bahama blue		X	99F
-	LKL 099 Y00	COLIBRIGRUEN		X	99Y
-	LKL 094 K00	pearl		X	94K
-	LKL 0Y7 V00	dolomite grey		X	Y7V
-	LKL 0A3 V00	indiana red		X	A3V
-	LKL 0M5 V00	petrol blue		X	M5V
-	LKL 0M5 Y00	minerva blue		X	M5Y
-	911 096 064 00	clear lacquer GLASSODUR		X	
		paint touch-up applicator			
-	E L 004 101	black		X	L 041
-	E L 062 Y01	signal green		X	L 62Y
-	E L 031 B01	scarlet		X	L 31B
-	E L 091 Z01	atlas white		X	L 91Z
-	E L 087 Z01	maroon		X	L 87Z
-	E L 010 A01	rally yellow		X	L 10A
-	E L 063 Z01	SPANISCHGRUEN		X	L 63Z
-	E L 090 A01	polar white		X	L 90A
-	E L 093 Z01	white		X	L 93Z
-	L 090 E01	ALPINWEISS 78		X	L 90E
-	E L 0E1 M01	mexico beige		X	L E1M
-	L 0M3 A01	paint		X	L M3A
-	L 0M9 V01	mocha black		X	L M9V
-	L 0M7 A01	flieder		X	L M7A
		paint touch-up applicator set comprising: paint touch-up applicator top-coat paint paint touch-up applicator clear lacquer			
-	E L 098 Y01	ATLANTICBLAU		X	98Y
-	E L 097 Y01	TIZIANBRAUN		X	97Y

Pos	Part Number	Name	Remarks	Qty	Model	Pos	Part Number	Name	Remarks	Qty	Model
-	E L 096 N01	peppermint ice		X	96N						
-	L 097 A01	DIAMANTSILBER		X	97A						
-	L 095 E01	reseda green		X	95E						
-	L 095 F01	copper		X	95F						
-	E L 096 Y02	paint		X	96Y						
-	L 099 F01	bahama blue		X	99F						
-	L 099 Y01	COLIBRIGRUEN		X	99Y						
-	E L 094 K01	pearl		X	94K						
-	L 0Y7 V01	dolomite grey		X	Y7V						
-	L 0A3 V01	indiana red		X	A3V						
-	L 0M5 V01	petrol blue		X	M5V						
-	L 0M5 Y01	minerva blue		X	M5Y						
		- -- E N D -- -									

Model	Year	MG	SG	Illustration	Restrictions	Update		
924	79	0	05	5-00		187	10:45	06.04.2005

Pos	Part Number	Name	Remarks	Qty	Model
		securing liquid sealing compound preservative agent			
		securing liquid			
-	928 101 921 00	loctite -270- 10 CCM high strength		X	
-	000 043 012 00	loctite -221- 10 CCM low strength		X	
		sealing compound			
-	000 043 010 00	loctite -574- 50 CCM		X	
-	000 043 011 00	loctite -638- 10 CCM for balance shaft		X	
-	E 000 043 013 00	loctite adhesive remover -80646- spraying can		X	
-	E AMV 176 000 05	adhesive sealing compound 310 CCM		1	
		loctite for pasting metal glass ceramics thermoset plastic adhesive set comprising:		X	
-	000 043 051 00	adhesive loctite -317- 50 CCM		X	
-	000 043 202 65	loctite AKTIVATOR NF 736 180 CCM		X	
-	000 043 019 01	sealing compound SILASTIK 730 RTV 90 CCM		X	
-	000 043 004 00	mounting paste optimoly ht 1 90-g tube		X	

Model	Year	MG	SG	Illustration	Restrictions	Update		
924	79	0	05	5-00		187	10:45	06.04.2005

Pos	Part Number	Name	Remarks	Qty	Model
-	000 043 020 00	optimoly mounting paste OPTIMOLY - TA 1 tube 100 g silver		X	
-	000 043 110 01	grease OPTITEMP PU35 1 TUBE 100 G		X	
-	000 043 204 21	grease for lock cylinder spraying can preservative agent		X	
-	E 999 571 062 00	care kit comprising: suitcase		1	
-	E 999 901 013 40	liquid preservative		1	
-	999 901 014 41	cleaning agents		1	
-	E 999 901 015 40	polisher		1	
-	E 999 901 016 40	tar remover		1	
-	E 999 901 017 40	dashboard cleaner		1	
-	E 999 901 018 40	paint polish		1	
-	999 901 019 41	insect remover		1	
-	E 999 901 020 40	spot remover		1	
-	999 901 021 40	polishing cotton		1	
-	E 999 901 022 40	polishing cloth		1	
-	000 044 000 02	preservative agent 250 ML		X	
-	999 901 017 41	window cleaner summer 250 ML		X	
-	E 999 901 033 40	window cleaner winter 1000 ML		X	
-	E 999 901 036 40	car shampoo refilling bottle 1000 ML		X	
-	999 917 803 00	window cleaner spray bottle 250 ML		X	
-	928 628 931 00	silicone remover 1000 ML		X	

Model	Year	MG	SG	Illustration	Restrictions	Update		
924	79	0	05	5-00		187	10:45	06.04.2005

Pos	Part Number	Name	Remarks	Qty	Model
-	E 999 901 030 40	rim cleaner spray bottle 500 ML		X	
-	999 901 031 40	rim cleaner refilling bottle 1000 ML		X	
		- -- E N D -- -			

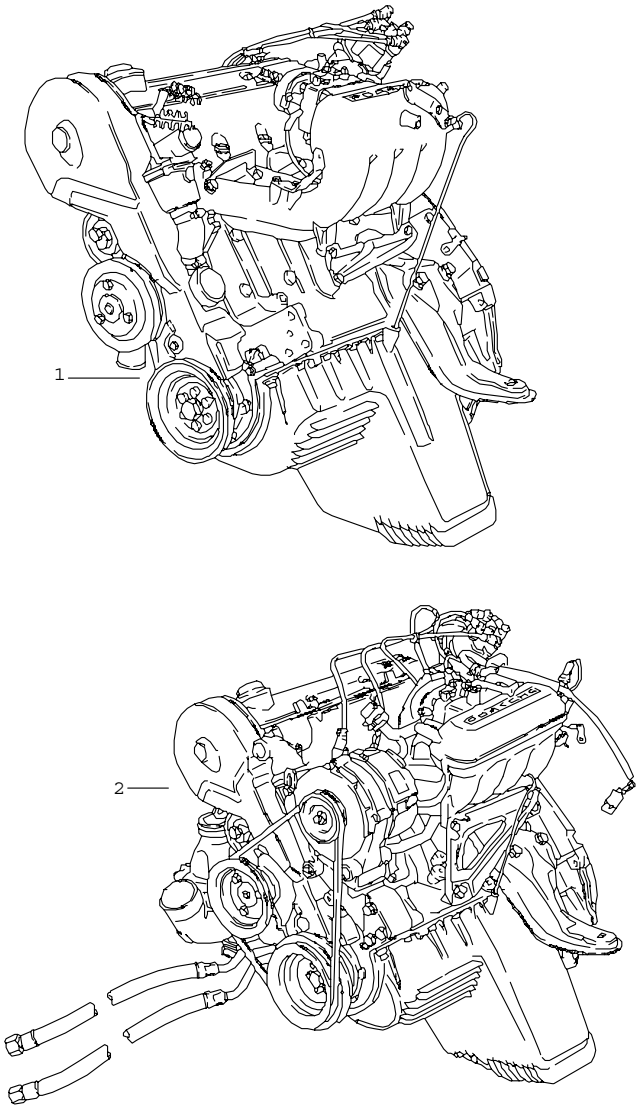

Pos	Part Number	Name	Remarks	Qty	Model
		replacement engine			
1	E 047 100 015 F	replacement engine 92 KW (125 DIN-PS) for M62 use also: 056.129.777	/LL	1	924 XK
1	047 100 015 G	replacement engine 92 KW (125 DIN-PS) M >> XK 04 9526 for M62 use also: 056.129.777	/LL	1	924 XK AUT.
1	047 100 015 R	replacement engine 92 KW (125 DIN-PS) for M 479 use also: 047.131.013.A	/RL	1	924 XJ
1	047 100 015 S	replacement engine 92 KW (125 DIN-PS)	/RL	1	924 XJ AUT.
	001	M >> XJ 00 6058			
2	> 931 100 201 00	replacement engine 125 KW (170 DIN-PS)	/LL	1	TURBO M31.01
		- -- E N D -- -			

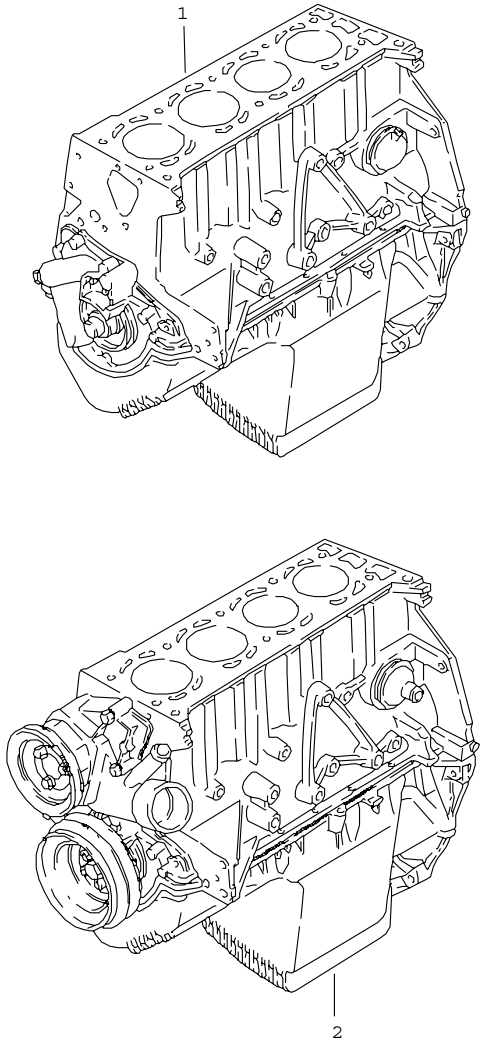

Pos	Part Number	Name	Remarks	Qty	Model
		short engine with crankshaft piston oil pump			
1	047 100 103 F	short engine 92 KW (125 DIN-PS) use also: 052.103.129.A 047.103.635 047.115.611.A with crankshaft piston oil pump water pump		1	924 XJ XK
2	> 047 100 031	short engine 125 KW (170 DIN-PS) use also: 047.103.635 047.115.611.A	79	1	TURBO M31.01
		- -- E N D -- -			

Model	Year	MG	SG	Illustration	Restrictions	Update				
924	79	1	01	101-10		187	10:46	06.04.2005	PORSCHE	PET	PORSCHE

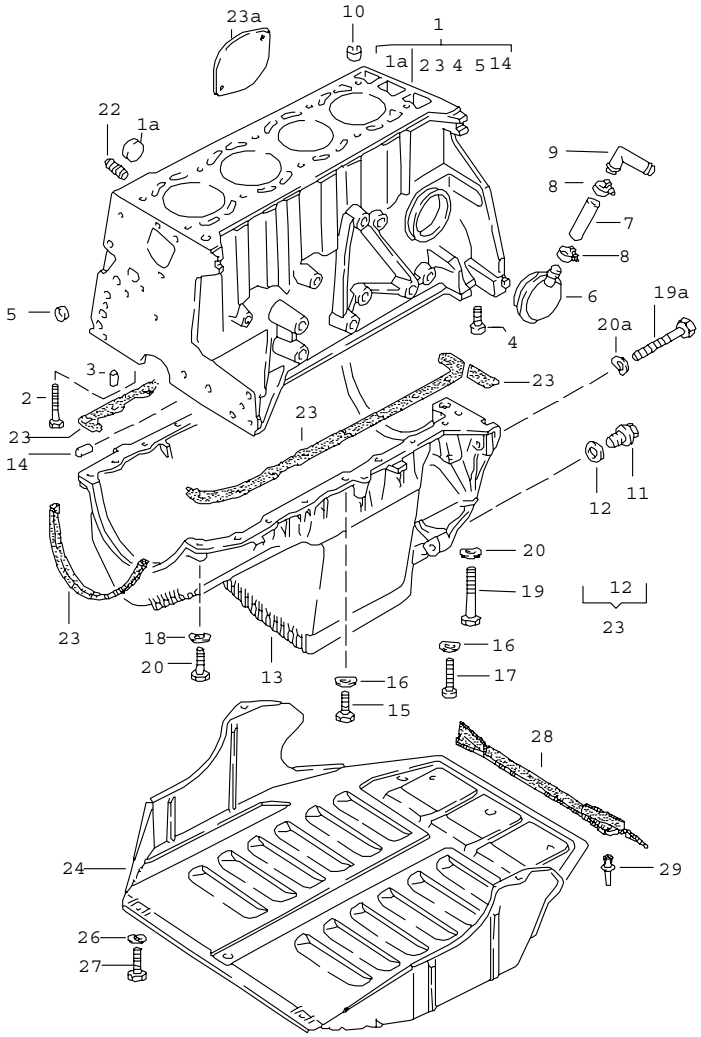

Pos	Part Number	Name	Remarks	Qty	Model
		cylinder block with pistons oil pan protective plate f. engine			
1	> 047 103 101 E	cylinder block with pistons use also: until M >> XK 00 3213 046.105.021.A 046.105.501 046.105.561 046.105.591		1	XJ XK
1	> 047 103 101 D	cylinder block with pistons		1	M31.01
1A	059 103 113	cover		5	
2	E N 010 488 3	hexagon-head bolt M 12 X 85		10	
3	999 012 034 00	straight pin 8 H 6 X 12		10	
4	N 014 724 3	pan-head screw M 10 X 20		2	
5	N 011 903 3	cover 16		2	
(5)	N 011 907 4	cover 14		1	
6	052 103 129 A	bleeder		1	924
(6)	931 107 063 00	bleeder		1	TURBO
-	N 020 343 1	hose		*	
7	-	18 X 2,5		1	
8	999 512 346 00	hose clamp LC 16-25		2	
9	047 103 227	elbow		1	
10	046 103 139	tensioning sleeve		2	
11	059 103 193	screw plug M 26 X 1,5		1	
(11)	N 902 889 01	screw plug M 14 X 1,5		1	

Pos	Part Number	Name	Remarks	Qty	Model
12	* N 043 854 1	sealing ring C 26 X 32		1	
(12)	900 123 007 30	sealing ring A 14 X 18		1	
13	047 103 603 A	oil pan use also: 047.103.635 047.115.611.A 047.115.641 047.115.645		1	924
13	047 103 603 B	oil pan use also: 047.103.635 047.115.611.A 931.107.154.00 047.115.645		1	TURBO
14	E N 043 207 2	straight pin 8 H 8 X 14		2	
15	N 014 703 2	pan-head screw M 6 X 18		13	
16	N 012 226 5	spring washer		13	
17	N 014 722 2	pan-head screw M 6 X 60		2	
18	N 014 725 2	pan-head screw M 8 X 25		2	
19	N 100 113 01	pan-head screw M 8 X 140		1	
(19)	N 044 724 2	pan-head screw M 8 X 70		1	
19A	N 010 479 2	hexagon-head bolt M 10 X 88		2	
(19A)	N 010 490 3	hexagon-head bolt M 12 X 55		1	
(19A)	N 010 467 1	hexagon-head bolt M 12 X 45		4	
20	N 012 241 11	spring washer		4	
20A	900 028 032 02	spring washer		3	
(20A)	900 028 014 02	spring washer		4	
22	059 115 721	union		1	924
23	* 060 198 041 A	set of seals for oil sump		1	
23A	931 101 131 00	cover protective plate f. engine		1	TURBO
24	477 407 583 C	protective plate		1	
25	N 015 433 1	speed nut	-78	2	924
26	900 151 029 02	washer	-78	6	924
(26)	900 151 003 02	washer	79	6	
27	N 013 976 1	tapping screw 6,3 X 13	-78	6	924
(27)	N 010 215 13	hexagon-head bolt M 6 X 15	79	6	
28	477 407 587	protection cover		1	TURBO
29	N 038 549 1	expansion rivet A 8 X 12		2	TURBO
		- -- E N D -- -			

Model	Year	MG	SG	Illustration	Restrictions	Update				
924	79	1	02	102-00		187	10:46	06.04.2005	PORSCHE	PET	PORSCHE

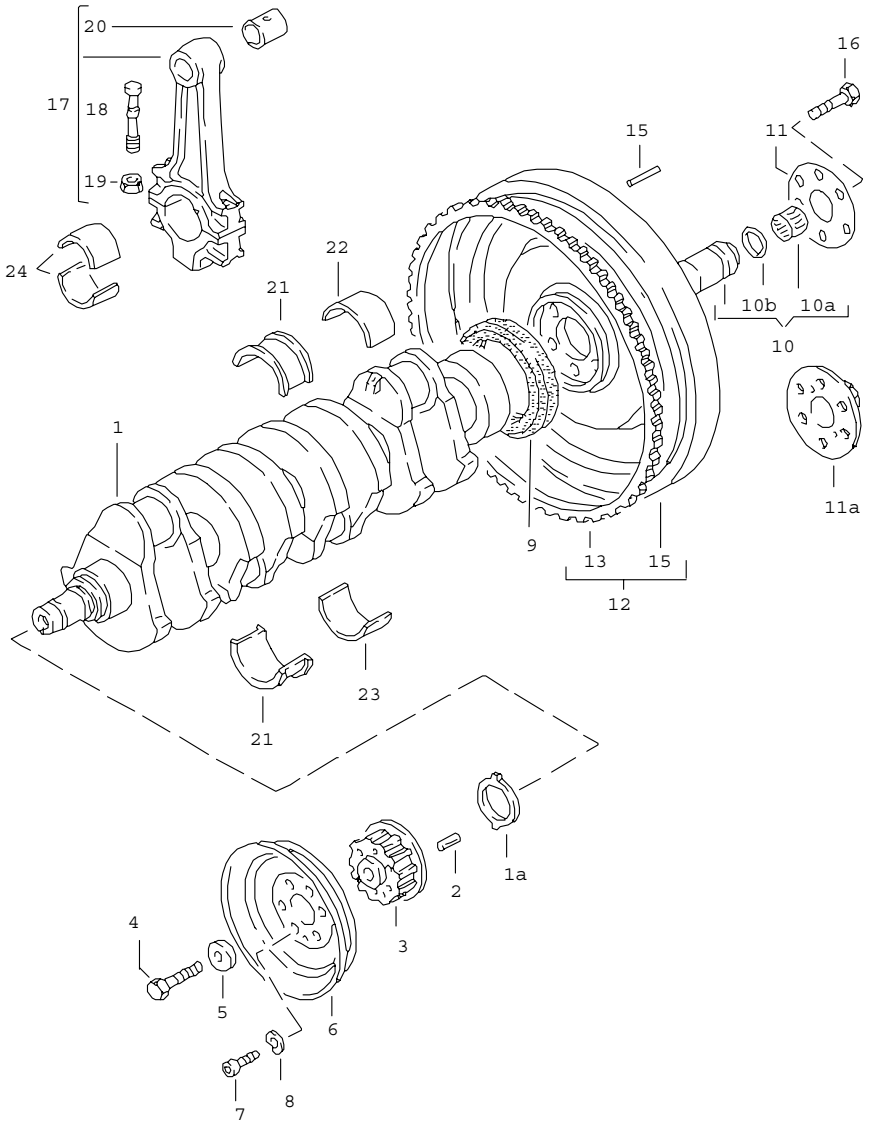

Pos	Part Number	Name	Remarks	Qty	Model
		crankshaft connecting rod			
1	048 105 021	crankshaft M >> XK 00 3213		1	XK XF XH
1	> 046 105 021 A	crankshaft		1	
1A	046 105 177	driver		1	
2	N 023 255 1	tensioning sleeve 4 X 12		1	
3	048 105 209	toothed belt pulley		1	
4	N 900 074 01	hexagon-head bolt M 16 X 1,5 X 50		1	
5	048 105 235	washer		1	
6	048 105 255 A	v-belt pulley simple v-belt	/LL	1	924
(6)	046 105 255 B	v-belt pulley simple v-belt	/RL	1	924
(6)	046 105 255 F	v-belt pulley double v-belt		1	924
(6)	477 105 255	v-belt pulley triple v-belt		1	
7	N 014 725 2	pan-head screw M 8 X 25		6	
8	N 012 241 11	spring washer B 8		6	
9	* 059 103 051 D	sealing ring		1	
10	047 105 169 A	sleeve with needle-roller bearing		1	924
(10)	931 102 111 00	deep-groove ball bearing		1	TURBO
10A	047 105 313	needle-roller bearing		1	924
10B	047 105 311	shaft seal 15 X 21 X 5/7		1	924
11	046 105 175	washer		1	
11A	047 105 179	stop	AUT.	1	924

Pos	Part Number	Name	Remarks	Qty	Model
12	E 046 105 269 A	flywheel M >> XK 00 3213		1	XK XF XH
(12)	046 105 269 B	flywheel		1	XJ XK
(12)	931 102 205 05	flywheel		1	TURBO
13	059 105 275	starter ring 10 MM M >> XK 00 3213		1	924
(13)	046 105 275 A	starter ring 8 MM		1	924
15	N 013 210 1	straight pin 6 M 6 X 16		3	924
16	N 040 110 1	hexagon-head bolt M 12 X 1,5 X 22		6	924
16	E 900 083 021 08	hexagon-head bolt M 12 X 1,5 X 20		6	TURBO
		connecting rod			
17	* 046 198 401	connecting rod 1 set		1	
18	E 059 105 425 A	connecting rod bolt		8	
19	* 059 105 427 A	hexagon nut		8	
20	E 059 105 431	connecting rod bush		4	
		crankshaft bearing $ 60 MM M >> XK 00 3213			924
21	* 059 105 501	crankshaft bearing thrust bearing upper		1	
21	* 059 105 507	crankshaft bearing thrust bearing upper undersize 0,25 mm		X	
21	E 059 105 513	crankshaft bearing thrust bearing upper undersize 0,50 mm		X	
21	E 059 105 519	crankshaft bearing thrust bearing upper undersize 0,75 mm		X	
21	* 059 105 531	crankshaft bearing thrust bearing lower		X	
21	* 059 105 537	crankshaft bearing thrust bearing lower undersize 0,25 mm		X	
21	E 059 105 543	crankshaft bearing thrust bearing lower undersize 0,50 mm		X	
21	E 059 105 549	crankshaft bearing thrust bearing lower undersize 0,75 mm		X	
22	E 059 105 561	crankshaft bearing upper numbers 1,2,4,5		4	
22	* 059 105 567	crankshaft bearing upper numbers 1,2,4,5 undersize 0,25 mm		X	
22	E 059 105 573	crankshaft bearing upper numbers 1,2,4,5 undersize 0,50 mm		X	
22	E 059 105 579	crankshaft bearing upper numbers 1,2,4,5 undersize 0,75 mm		X	
23	E 059 105 591	crankshaft bearing lower numbers 1,2,4,5		4	
23	* 059 105 597	crankshaft bearing lower numbers 1,2,4,5 undersize 0,25 mm		X	
23	E 059 105 603	crankshaft bearing lower numbers 1,2,4,5 undersize 0,50 mm		X	
23	E 059 105 609	crankshaft bearing lower numbers 1,2,4,5 undersize 0,75 mm		X	

Pos	Part Number	Name	Remarks	Qty	Model
		crankshaft bearing 64 MM $			
21	* 046 105 501	crankshaft bearing thrust bearing		2	
21	* 046 105 507	crankshaft bearing thrust bearing undersize 0,25 mm		X	
21	* 046 105 513	crankshaft bearing thrust bearing undersize 0,50 mm		X	
21	* 046 105 519	crankshaft bearing thrust bearing undersize 0,75 mm		X	
22	* 046 105 561	crankshaft bearing upper numbers 1,2,4,5		4	
22	* 046 105 567	crankshaft bearing upper numbers 1,2,4,5 undersize 0,25 mm		X	
22	* 046 105 573	crankshaft bearing upper numbers 1,2,4,5 undersize 0,50 mm		X	
22	* 046 105 579	crankshaft bearing upper numbers 1,2,4,5 undersize 0,75 mm		X	
23	* 046 105 591	crankshaft bearing lower numbers 1,2,4,5		4	
23	E 046 105 597	crankshaft bearing lower numbers 1,2,4,5 undersize 0,25 mm		X	
23	* 046 105 603	crankshaft bearing lower numbers 1,2,4,5 undersize 0,50 mm		X	
23	* 046 105 609	crankshaft bearing lower numbers 1,2,4,5 undersize 0,75 mm		X	
		connecting-rod bearing			
24	E 046 105 701	connecting-rod bearing		8	
24	E 046 105 707	connecting-rod bearing undersize 0,25 mm		X	
24	E 046 105 713	connecting-rod bearing undersize 0,50 mm		X	
24	* 046 105 719	connecting-rod bearing undersize 0,75 mm		X	
		- -- E N D -- -			

Model	Year	MG	SG	Illustration	Restrictions	Update			
924	79	1	02	102-05		187	10:47	06.04.2005	PORSCHE PET PORSCHE

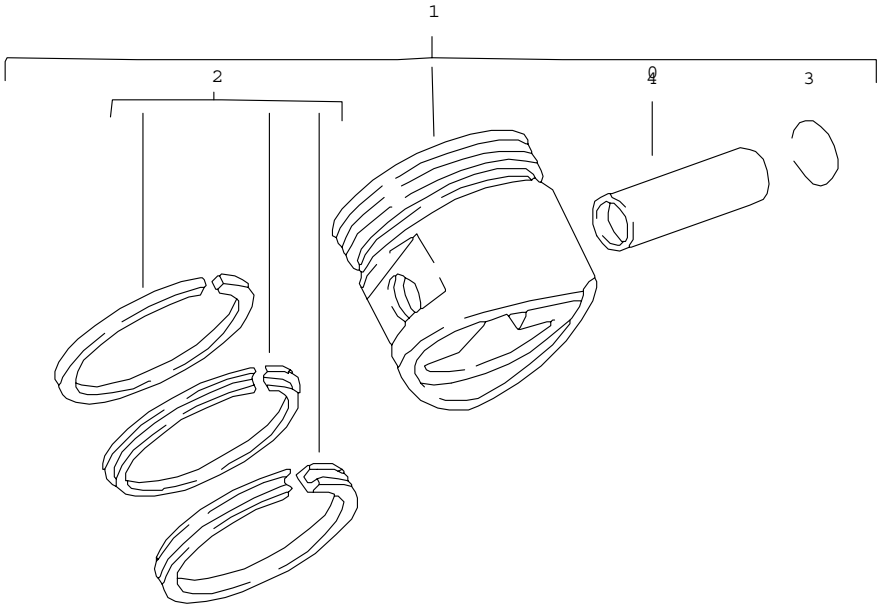

Pos	Part Number	Name	Remarks	Qty	Model
		piston piston rings			
1	047 107 065 F	piston		4	XJ XK
	001	86,48 MM			
	002	86,49 MM			
	003	86,50 MM			
1	047 107 071 F	piston oversize 86,75 MM		4	XJ XK
1	E 047 107 081 F	piston oversize 87,00 MM		4	XJ XK
1	047 107 091 F	piston oversize 87,50 MM		4	XJ XK
1	931 103 045 02	piston 86,50 MAHLE size 1		4	M31.01
1	E 931 103 045 12	piston 86,50 MAHLE size 2		4	M31.01
1	E 931 103 045 22	piston 86,50 MAHLE size 3		4	M31.01
1	E 931 103 045 51	piston 86,75 MAHLE size 1		4	M31.01
1	931 103 045 52	piston 86,75 MAHLE size 2		4	M31.01
1	E 931 103 045 53	piston 86,75 MAHLE size 3		4	M31.01
1	931 103 045 61	piston 87,00 MAHLE size 1		4	M31.01
1	E 931 103 045 62	piston 87,00 MAHLE size 2		4	M31.01
1	E 931 103 045 63	piston 87,00 MAHLE size 3		4	M31.01

Pos	Part Number	Name	Remarks	Qty	Model
2	* 060 198 151	set of piston rings 86,5 for 1 piston		4	924
2	* 060 198 153	set of piston rings 86,75 for 1 piston		4	924
2	* 060 198 155	set of piston rings 87,00 for 1 piston		4	924
2	* 931 103 901 00	set of piston rings 86,50 for 1 piston		4	M31.01
2	* 931 103 901 25	set of piston rings 86,75 for 1 piston		4	M31.01
2	* 931 103 901 50	set of piston rings 87,00 for 1 piston		4	M31.01
2	E 931 103 901 75	set of piston rings 87,50 for 1 piston		4	M31.01/02
3	N 012 277 1	snap ring		8	
4	E 046 107 411	piston pin		4	924
4	E 931 103 407 00	piston pin		4	TURBO
		- -- E N D -- -			

Model	Year	MG	SG	Illustration	Restrictions	Update				
924	79	1	03	103-00		187	10:47	06.04.2005	PORSCHE	PET	PORSCHE

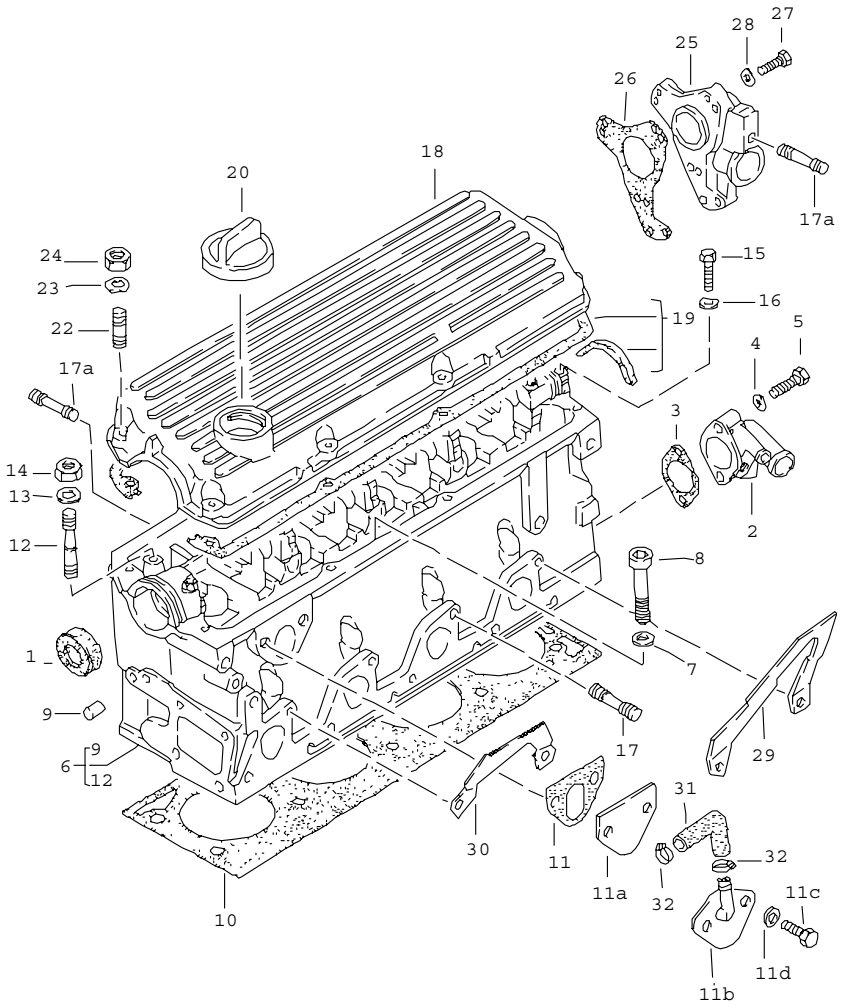

Pos	Part Number	Name	Remarks	Qty	Model
		cylinder head			
1	* 068 103 085 A	sealing ring		1	
2	047 103 093 B	flange		1	
3	* 052 121 091 A	gasket		1	
4	N 012 226 5	spring washer		2	
5	N 010 221 3	hexagon-head bolt M 6 X 35		2	924
5	900 074 151 02	hexagon-head bolt M 6 X 38		1	M31.01
6	> 047 103 353 C	cylinder head		1	XJ XK
6	931 104 901 03	cylinder head use also: 047.103.113.A 059.127.311.A		1	M31.01
7	059 103 377 A	washer		10	M31.01
7	059 103 377 A	washer		10	924
8	N 014 731 2	pan-head screw M 12 X 115		10	
8	A 068 103 384 A	pan-head screw		10	924
8	068 103 384 A	pan-head screw M 12 X 115 only together with 047.103.383		10	924
9	056 103 379	plug		1	
10	* 931 104 337 06	cylinder head gasket		1	924
10	* 931 104 337 06	cylinder head gasket		1	M31.01
11	* 059 127 311 A	gasket		1	924
11A	047 103 113 A	cover		1	924
12	056 103 397	stud M 8 X 56		10	
13	900 031 001 02	washer		10	
14	N 011 008 8	hexagon nut		10	
15	N 010 221 3	hexagon-head bolt M 6 X 35		2	
16	N 012 226 5	spring washer		2	

Pos	Part Number	Name	Remarks	Qty	Model
17	N 044 411 5	stud M 8 X 30		4	924
17	999 062 010 02	stud M 8 X 35		2	M31.01
17	999 062 044 02	stud M 8 X 30		2	M31.01
17A	N 044 411 5	stud M 8 X 30		8	924
17A	999 062 238 02	stud M 8 X 25		8	M31.01
18	047 103 475	cylinder head cover		1	
19	* 060 198 025 A	set of seals		1	
20	047 103 485	cover		1	
22	N 044 462 2	stud M 6 X 25		8	
23	N 012 226 5	spring washer		8	
24	900 076 010 02	hexagon nut		8	
25	E 048 905 215 A	housing for distributor driving mechanism		1	
26	* 048 905 341 B	gasket		1	
27	N 010 218 6	hexagon-head bolt 6 X 25		3	924
(27)	N 010 220 3	hexagon-head bolt M 6 X 30		1	M31.01
28	N 012 226 5	spring washer		3	
29	046 103 391	engine lifting bracket	/V	1	
30	046 103 392	engine lifting bracket	/H	1	
		- -- E N D -- -			

Pos	Part Number	Name	Remarks	Qty	Model

Model	Year	MG	SG	Illustration	Restrictions	Update				
924	79	1	03	103-05		187	10:47	06.04.2005	PORSCHE	PET	PORSCHE

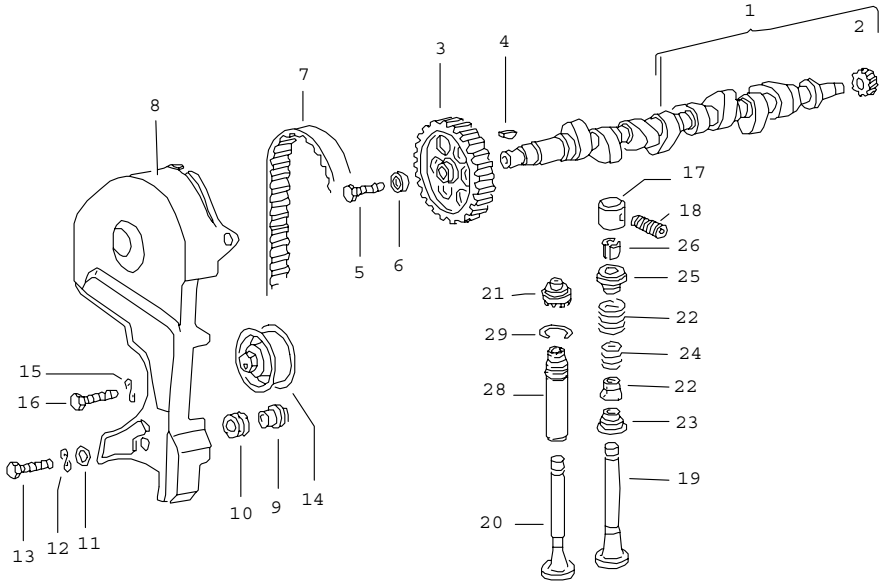

Pos	Part Number	Name	Remarks	Qty	Model
		camshaft valves			
1	046 109 021	camshaft		1	
2	048 109 109	drive wheel f.ignition distributor		1	
3	049 109 111 C	gear wheel		1	
4	N 012 708 2	woodruff key		1	
5	N 010 137 1	hexagon-head bolt M 12 X 1,5 X 35		1	
6	056 109 143	washer		1	
7	056 109 119 A	toothed belt		1	
8	E 048 109 123	cover for toothed belt		1	XK XE XG
8	047 109 121	cover for toothed belt		1	XJ XF XH
8	931 105 051 00	cover for toothed belt		1	M31.01
9	056 109 135	bearing sleeve		3	
10	056 129 669 B	grommet		3	
11	N 011 612 3	washer		3	
12	N 012 226 5	spring washer		3	
13	N 010 218 6	hexagon-head bolt M 6 X 25		3	
14	056 109 243 D	tensioning roller		1	
15	N 012 231 1	spring washer		1	
16	N 010 455 3	screw M 10 X 55		1	
17	046 109 311	cam follower		8	
18	046 109 453 C	adjusting screw		8	
18	046 109 453 D	adjusting screw 1 noctch		X	
18	046 109 453 E	adjusting screw 2 notches		X	
18	046 109 453 F	adjusting screw 3 notches		X	
18	046 109 453 G	adjusting screw 4 notches		X	

Pos	Part Number	Name	Remarks	Qty	Model
19	046 109 601 A	intake valve		4	XK XJ XE XG
19	931 105 401 02	intake valve		4	M31.01
20	046 109 611 A	exhaust valve		4	924
20	931 105 406 02	exhaust valve		4	M31.01
21	046 109 617	roto cap clockwise rotation		4	924
21	046 109 617	roto cap clockwise rotation		8	TURBO
22	E 046 109 623	valve spring outer		8	
23	046 109 629	concave washer lower intake valve		4	924
24	046 109 633	valve spring inner		8	
25	059 109 641 A	concave washer upper		8	
26	059 109 651	collet		16	
27	* 046 109 675 A	valve stem seal		8	
28	046 103 415 A	valve guide exhaust standard dimension 14,04 MM without groove		4	924
28	046 103 419 A	valve guide exhaust 1st oversize one groove 14,24 MM		4	924
28	931 104 324 04	valve guide exhaust 1st oversize one groove 14,08		4	TURBO
28	046 103 423 A	valve guide exhaust 2nd oversize two grooves 14,44 MM		4	924
28	931 104 324 05	valve guide exhaust 2nd oversize two grooves 14,11 MM		4	TURBO
28	048 103 415 A	valve guide intake standard dimension without groove 14,04 MM only together with 046.109.629		4	924
28	048 103 419 A	valve guide intake 1st oversize one groove 14,24 MM only together with 046.109.629		4	924
28	931 104 323 04	valve guide intake 1st oversize one groove 14,08 MM		4	TURBO
28	048 103 423 A	valve guide intake 2nd oversize two grooves 14,44 MM only together with 046.109.629		4	924
28	931 104 323 05	valve guide intake 2nd oversize two grooves 14,11 MM		4	TURBO
29	N 012 460 1	snap ring		8	
		- -- E N D -- -			

Model	Year	MG	SG	Illustration	Restrictions	Update			
924	79	1	04	104-00		187	10:47	06.04.2005	PORSCHE PET PORSCHE

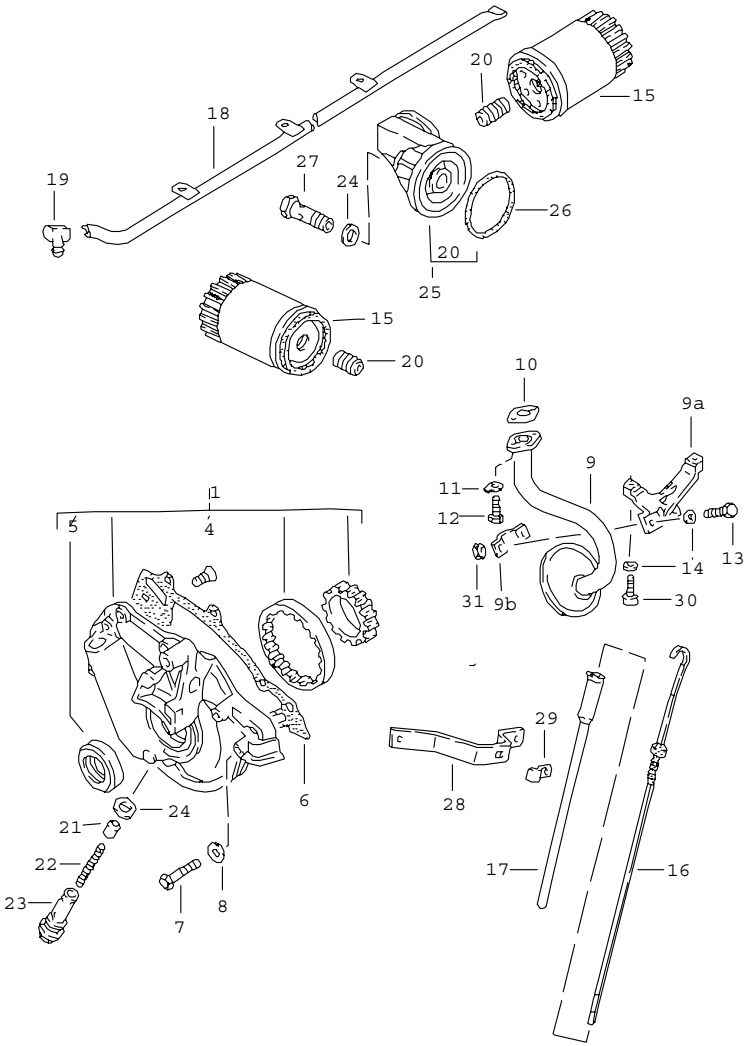

Pos	Part Number	Name	Remarks	Qty	Model
		engine lubrication			924
1	E 046 115 105 A	oil pump		1	
4	E N 033 178 1	countersunk-head screw M 6 X 15		6	
5	E 048 115 147	sealing ring 35 X 54 X 10		1	
6	* 046 115 189 A	gasket		1	
7	N 010 339 3	hexagon-head bolt M 6 X 40		5	
7	N 010 347 3	hexagon-head bolt M 6 X 35		1	
8	900 031 011 02	washer 6,4		6	
9	047 115 251 B	intake pipe use also: 047.115.267.C 047.115.285		1	
9A	047 115 267 C	retaining bracket		1	
9B	047 115 285	clip		1	
10	* 048 115 257	gasket		1	
11	048 115 259	tab washer		1	
12	N 900 572 01	hexagon socket head bolt M 6 X 15		2	
13	N 010 210 7	hexagon-head bolt M 6 X 10		1	
14	N 012 226 5	spring washer		1	
15	931 107 701 00	oil filter		1	
16	047 115 611	oil level dipstick with guide tube 210 MM		1	
16	047 115 611 A	oil level dipstick without guide tube 392 MM		1	
-	059 115 625	sealing ring		1	
17	E 047 103 635	guide tube		1	

Pos	Part Number	Name	Remarks	Qty	Model
18	047 115 701	oil splash tube		1	
19	E 052 115 707	adapter		1	
20	059 115 721	union		1	
21	056 115 411 A	piston		1	
22	068 115 421	spring		1	
23	046 115 419	housing relief valve		1	
24	N 043 815 2	sealing ring A 20 X 24		2	
25	046 115 573 A	bracket for oil filter	/RL	1	
26	046 115 581	o-ring 62 X 3	/RL	1	
27	E 046 115 579 A	banjo bolt	/RL	1	
28	E 047 115 641	support		1	
29	047 115 645	clip		1	
30	900 067 011 02	pan-head screw M 6 X 20		2	
31	900 076 010 02	hexagon nut		2	
		- -- E N D -- -			

Pos	Part Number	Name	Remarks	Qty	Model

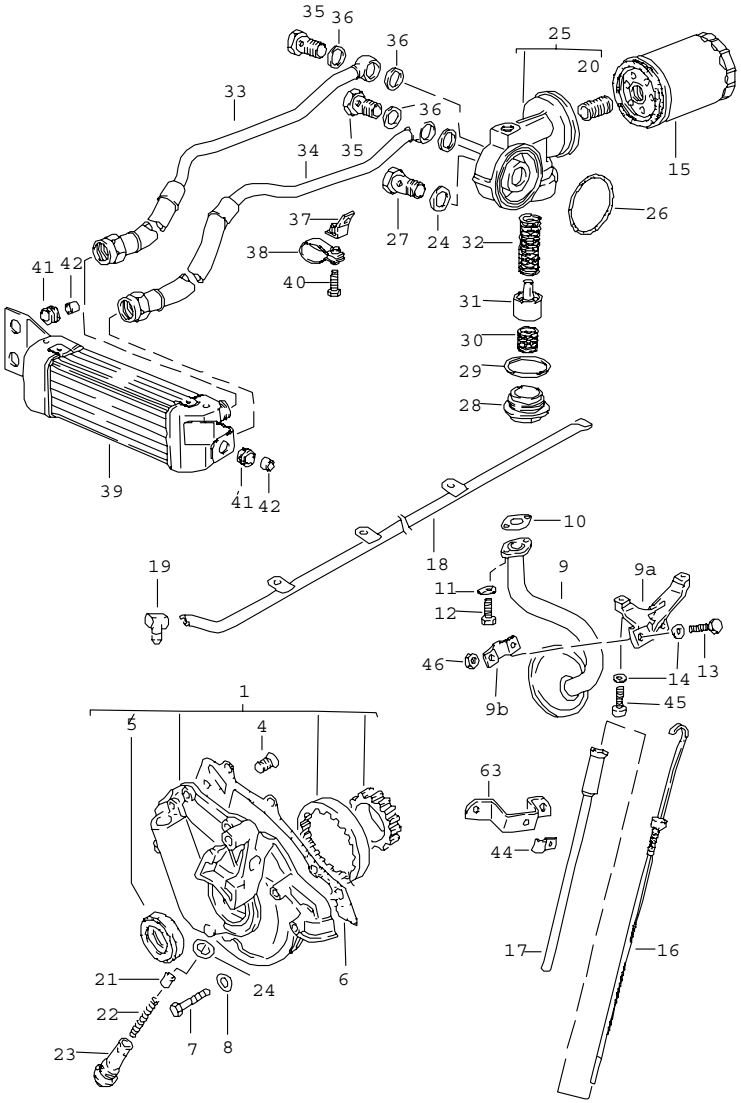

Pos	Part Number	Name	Remarks	Qty	Model
		engine lubrication engine oil cooler			TURBO
1	E 046 115 105 A	oil pump		1	
4	E N 033 178 1	countersunk-head screw M 6 X 15		6	
5	E 048 115 147	sealing ring 35 X 54 X 10		1	
6	* 046 115 189 A	gasket		1	
7	N 010 339 3	hexagon-head bolt M 6 X 40		5	
7	N 010 347 3	hexagon-head bolt M 6 X 35		1	
8	900 031 011 02	washer		6	
9	047 115 251 B	intake pipe use also: 047.115.267.C 047.115.285		1	
9A	047 115 267 C	retaining bracket		1	
9B	047 115 285	clip		1	
10	* 048 115 257	gasket		1	
11	048 115 259	tab washer		1	
12	N 900 572 01	hexagon socket head bolt M 6 X 15		2	
13	N 010 210 7	hexagon-head bolt M 6 X 10		1	
14	N 012 226 5	spring washer		1	
15	931 107 701 00	oil filter		1	
16	047 115 611	oil level dipstick		1	
16	047 115 611 A	oil level dipstick		1	
-	059 115 625	sealing ring		1	
17	E 047 103 635	guide tube		1	
18	047 115 701	oil splash tube		1	
19	E 052 115 707	adapter		1	
20	059 115 721	union		1	

Pos	Part Number	Name	Remarks	Qty	Model
21	056 115 411 A	piston		1	
22	068 115 421	spring		1	
23	046 115 419	housing relief valve		1	
24	N 043 815 2	sealing ring A 20 X 24		2	
25	931 107 151 00	bracket for oil filter		1	
26	999 701 621 40	o-ring		1	
27	E 046 115 579 A	banjo bolt		1	
28	931 107 152 00	screw plug		1	
29	900 123 098 70	sealing ring A 42 X 49		1	
30	928 107 173 00	spring		1	
31	928 107 172 02	regulator insert		1	
32	928 107 171 01	spring		1	
33	931 107 127 11	oil pipe oil cooler engine		1	
34	931 107 129 11	oil pipe engine oil cooler		1	
35	999 134 023 02	banjo bolt		2	
36	900 123 106 30	sealing ring A 18 X 24		4	
37	931 107 125 01	retaining bracket		1	
38	999 511 066 02	clamp		2	
39	E 931 207 051 01	engine oil cooler		1	
40	900 378 030 09	hexagon-head bolt M 6 X 20		1	
41	056 129 669 B	grommet		3	
42	052 109 135	spacer sleeve		3	
43	E 931 107 154 00	support		1	
44	047 115 645	clip		1	
45	900 067 011 02	pan-head screw M 6 X 20		2	
46	900 076 010 02	hexagon nut		2	

- -- E N D -- -

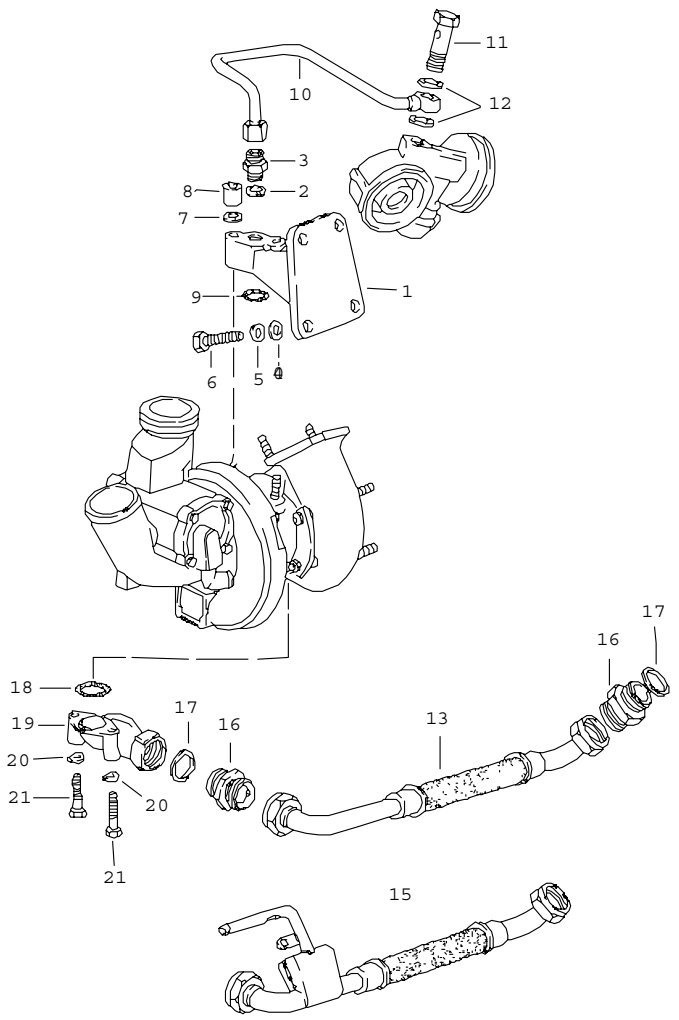

Pos	Part Number	Name	Remarks	Qty	Model
		engine lubrication turbocharger			TURBO
1	931 123 124 03	bracket		1	
2	900 123 008 30	sealing ring A 14 X 20		1	
3	N 020 702 1	screw socket		1	
4	900 025 007 02	washer		4	
5	N 012 241 8	spring washer		4	
6	900 075 083 02	hexagon-head bolt M 8 X 25		4	
7	900 031 001 02	washer		2	
8	999 085 001 02	socket head nut		2	
9	999 707 043 40	o-ring 17 X 3		1	
10	931 107 109 05	oil pipe		1	
11	N 021 074 1	banjo bolt		1	
12	900 123 008 30	sealing ring		2	
13	931 107 108 03	oil pipe		1	
15	931 107 108 08	oil pipe		X	
16	900 915 008 02	connection piece		2	
17	900 123 084 30	sealing ring A 26 X 31		2	
18	900 174 045 40	sealing ring 25 X 3,15		1	
19	931 107 111 02	bracket		1	
20	N 012 241 8	spring washer		2	
21	900 074 134 02	hexagon-head bolt M 8 X 45		2	
		- -- E N D -- -			

Model	Year	MG	SG	Illustration	Restrictions	Update	10:48	06.04.2005	PORSCHE PET PORSCHE
924	79	1	05	105-00		187			

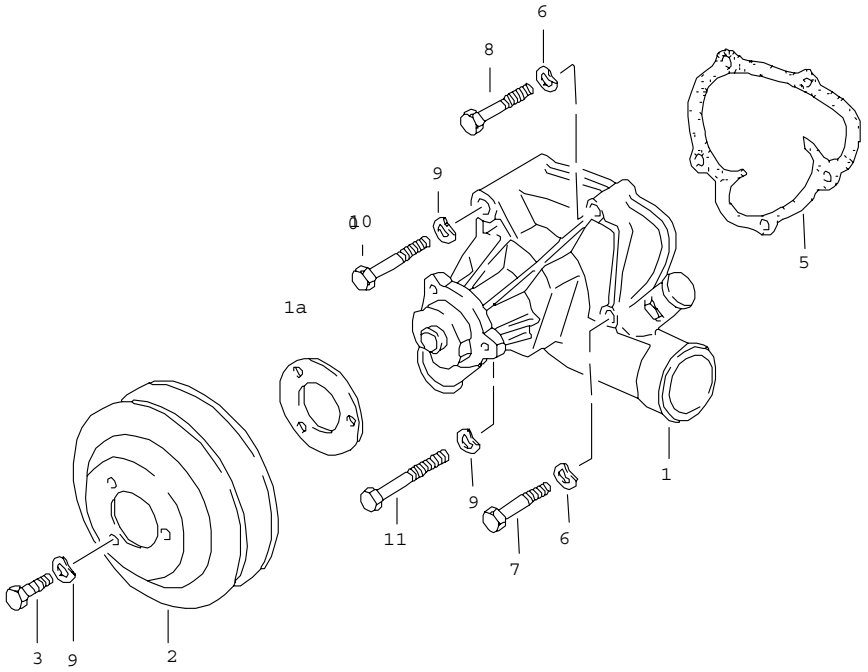

Pos	Part Number	Name	Remarks	Qty	Model
		water pump			
1	E 060 121 011	water pump		1	
1A	046 121 185	spacer		1	
2	059 121 031	v-belt pulley		1	
3	N 010 237 6	hexagon-head bolt M 8 X 12	/LL	3	924
(3)	900 075 087 02	hexagon-head bolt M 8 X 16		3	
5	* 046 121 041 A	gasket		1	
6	N 012 226 5	spring washer		3	
7	N 010 348 4	hexagon-head bolt M 6 X 45		2	
8	N 010 221 3	hexagon-head bolt M 6 X 35		1	
9	N 012 229 3	spring washer		5	
10	N 010 361 4	hexagon-head bolt M 8 X 65		1	
11	N 010 373 2	hexagon-head bolt M 8 X 72		1	
		- -- E N D -- -			

Model	Year	MG	SG	Illustration	Restrictions	Update			
924	79	1	05	105-05		187	10:48	06.04.2005	PORSCHE PET PORSCHE

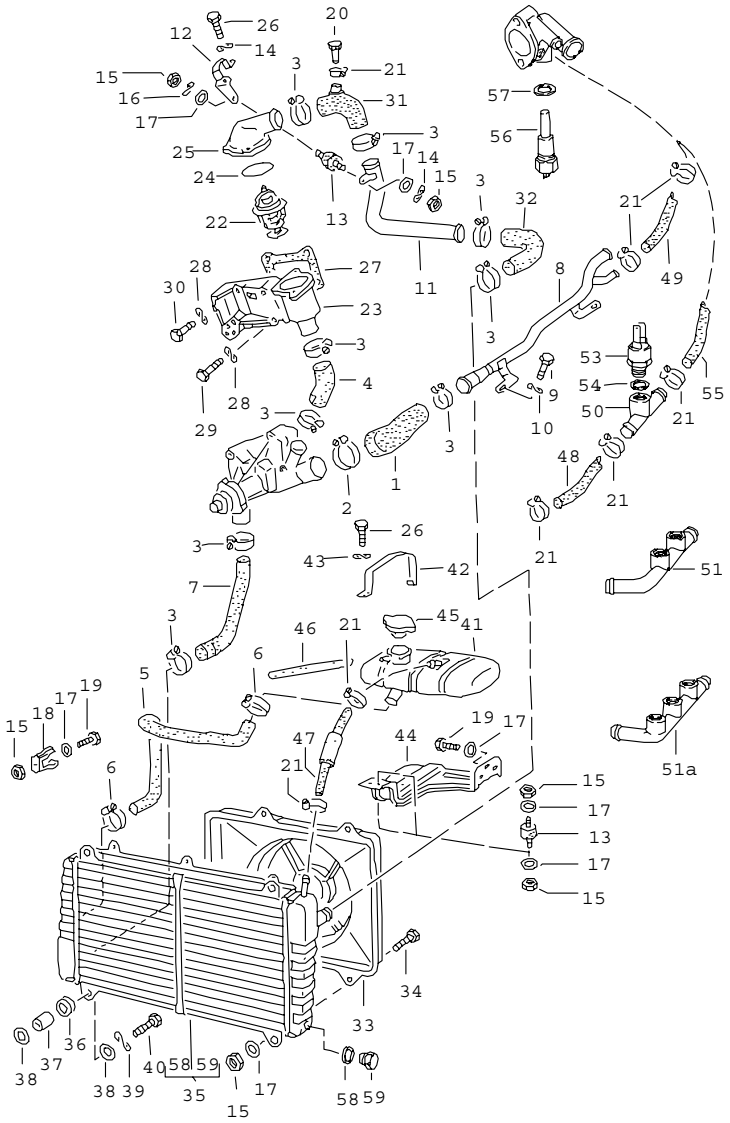

Pos	Part Number	Name	Remarks	Qty	Model
		water cooled			924
1	046 121 051	water hose		1	
2	999 512 348 02	hose clamp 40-60		1	
3	N 024 516 3	hose clamp 30-45		9	
4	046 121 053	water hose		1	
5	047 121 060	water hose		1	
6	999 512 252 02	hose clamp 23-35		2	
7	046 121 061	water hose		1	
8	047 121 073	water tube		1	
9	900 075 087 02	hexagon-head bolt M 8 X 16		1	
10	900 027 015 02	lock ring		1	
11	E 047 121 073 A	water tube		1	
12	047 121 094	support		1	
13	999 703 239 00	bonded rubber buffer		3	
14	N 012 226 5	spring washer		3	
15	900 076 010 02	hexagon nut		11	
16	N 012 226 5	spring washer		1	
17	N 011 524 7	washer		14	
18	E 046 121 095 A	hose clamp		2	
19	N 010 215 13	hexagon-head bolt M 6 X 15		5	
20	046 121 099	plug		1	
21	999 512 554 00	hose clamp 12-20		5	
22	E 059 121 113 B	thermostat 83 degree c		1	
22	059 121 113 A	thermostat 87 degree c		1	
23	048 121 117	housing		1	

Pos	Part Number	Name	Remarks	Qty	Model
24	* 038 121 119 B	sealing ring		1	
25	059 121 121	cover		1	
26	N 010 217 9	hexagon-head bolt M 6 X 20		3	
27	* 048 121 127 A	gasket		1	
28	N 012 229 3	spring washer		4	
29	N 010 335 5	hexagon-head bolt M 8 X 35		2	
30	900 075 029 09	hexagon-head bolt M 8 X 25		2	
31	E 047 121 175	hose elbow		1	
32	931 106 157 00	hose elbow		1	
33	477 121 207 C	fan cowl		1	
(33)	477 121 207 E	fan cowl for air conditioner		1	
34	N 010 210 7	hexagon-head bolt M 6 X 12		4	
35	477 121 251 A	radiator		1	
36	056 129 669 B	grommet		4	
37	052 109 135	spacer sleeve		4	
38	N 011 612 3	washer		8	
39	N 012 226 5	spring washer		4	
40	N 010 218 6	hexagon-head bolt M 6 X 25		4	
41	028 121 405 A	expansion tank		1	
42	028 121 409	restraining strap		1	
43	E N 012 036 5	lock ring		1	
44	477 121 413 B	bracket		1	
45	028 121 453	cover		1	
-	N 020 281 1	hose		*	
46	-	7 X 2,5 MM		1	
47	477 121 105	water hose		1	
49	810 819 371 G	water hose		1	
50	056 121 167	connecting piece		1	
53	047 131 851 D	temperature switch		1	
54	N 013 808 3	sealing ring A 10 X 16		1	
55	047 121 621 A	water hose		1	
56	043 906 163 A	temperature time switch		1	
57	900 123 007 30	sealing ring A 14 X 18		1	
58	900 123 050 20	sealing ring A 8 X 11,5		1	
59	N 016 158 1	screw plug AM 8 X 1		1	

- -- E N D -- -

Model	Year	MG	SG	Illustration	Restrictions	Update				
924	79	1	05	105-10		187	10:49	06.04.2005	PORSCHE	PET	PORSCHE

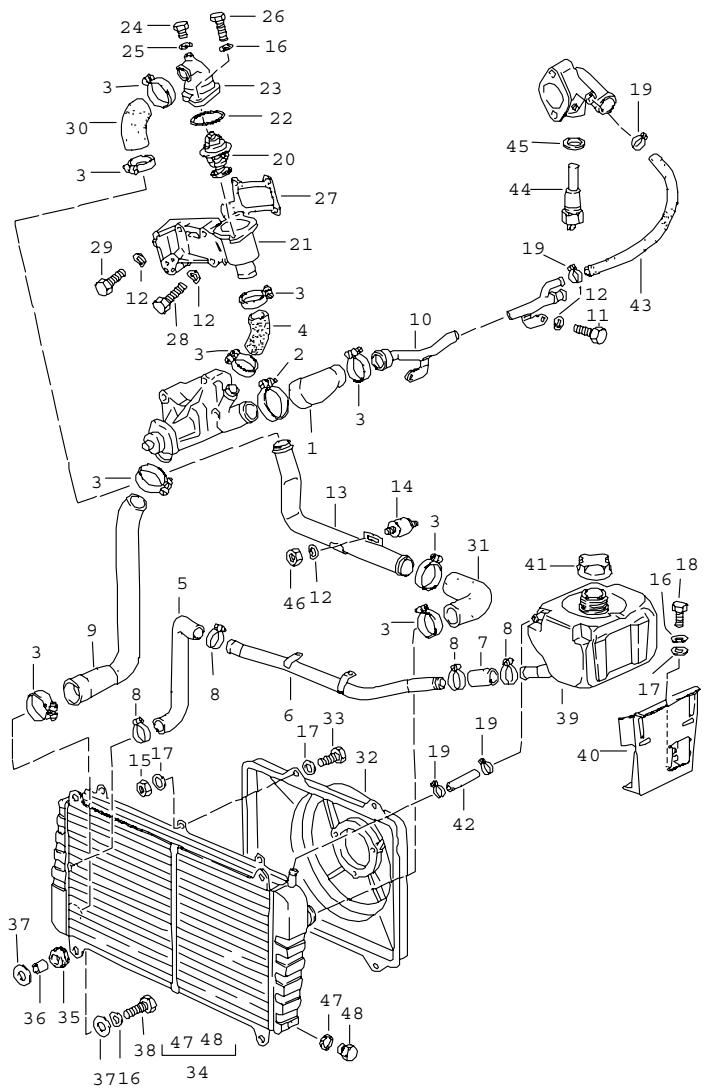

Pos	Part Number	Name	Remarks	Qty	Model
		water cooled			TURBO
1	046 121 051	water hose		1	
2	999 512 348 02	hose clamp 40-60		1	
3	N 024 516 3	hose clamp 30-45		9	
4	046 121 053	water hose		1	
5	931 106 267 01	water hose		1	
6	E 931 106 263 01	water tube		1	
-	999 238 001 40	water hose 20 X 27		*	
7	-	150 MM		1	
8	999 512 252 02	hose clamp 23-35		4	
9	046 121 061	water hose		1	
10	931 106 052 00	water tube		1	
11	900 075 087 02	hexagon-head bolt M 8 X 16		2	
12	900 027 015 02	lock ring		6	
13	931 106 051 04	water tube		1	
14	931 106 163 00	rubber mounting		1	
15	900 076 010 02	hexagon nut		8	
16	N 012 226 5	spring washer		8	
17	N 011 524 7	washer		10	
18	N 010 215 13	hexagon-head bolt M 6 X 15		3	
19	999 512 554 00	hose clamp 12-20		4	
20	059 121 113 A	thermostat 87 degree c		1	
21	048 121 117	housing		1	
22	* 038 121 119 B	sealing ring		1	
23	931 106 155 00	cover		1	

Pos	Part Number	Name	Remarks	Qty	Model
24	931 106 156 00	screw plug		1	
25	N 013 830 7	sealing ring A 8 X 12		1	
26	N 010 217 9	hexagon-head bolt M 6 X 20		2	
27	* 048 121 127 A	gasket		1	
28	N 010 335 5	hexagon-head bolt M 8 X 35		2	
29	900 075 029 09	hexagon-head bolt M 8 X 25		2	
30	E 931 106 159 00	hose elbow		1	
31	931 106 157 00	hose elbow		1	
32	477 121 207 C	fan cowl		1	
(32)	477 121 207 E	fan cowl air conditioner		1	
33	N 010 210 7	hexagon-head bolt M 6 X 12		4	
34	477 121 251 A	radiator		1	
35	056 129 669 B	grommet		4	
36	052 109 135	spacer sleeve		4	
37	N 011 612 3	washer		8	
38	N 010 218 6	hexagon-head bolt M 6 X 25		4	
39	931 106 265 02	expansion tank		1	
40	E 477 809 853	bracket		1	
41	171 121 321 B	cover		1	
42	000 043 205 14	hose 8 X 15		1	
43	810 819 371 G	water hose		1	
44	928 605 101 00	temperature time switch		1	
45	900 123 007 30	sealing ring A 14 X 18		1	
46	N 011 008 8	hexagon nut		1	
47	900 123 050 20	sealing ring A 8 X 11,5		1	
48	N 016 158 1	screw plug AM 8 X 1		1	

- -- E N D -- -

Model	Year	MG	SG	Illustration	Restrictions	Update				
924	79	1	06	106-00		187	10:49	06.04.2005	PORSCHE	PET	PORSCHE

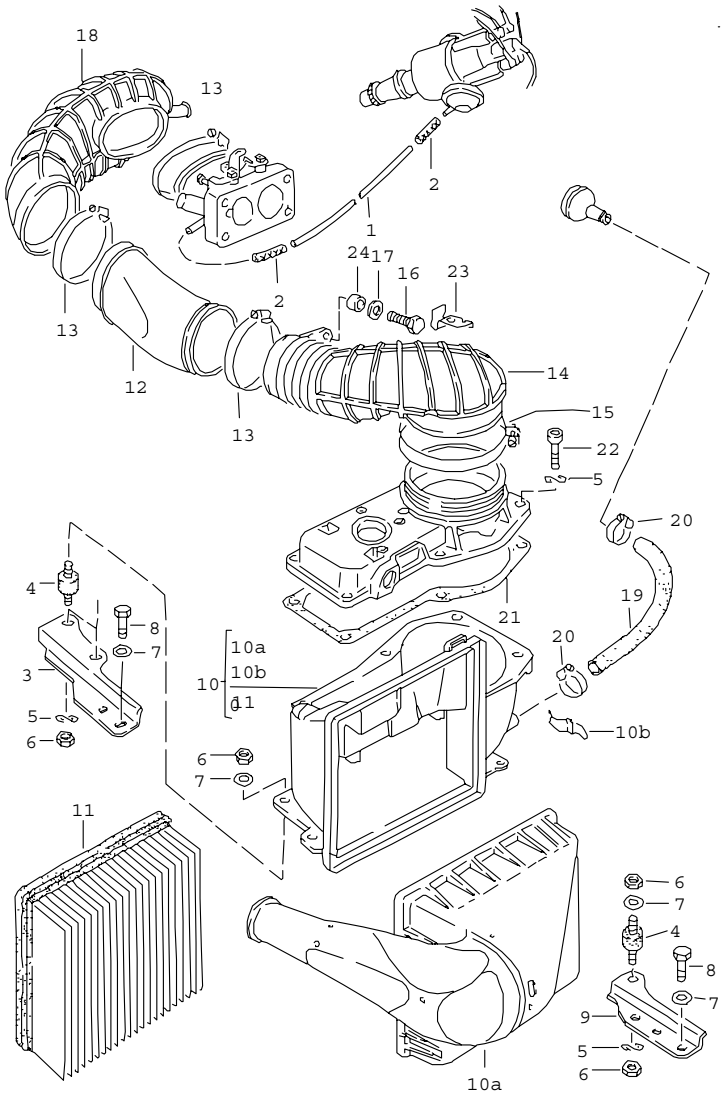

Pos	Part Number	Name	Remarks	Qty	Model
		air filter system			924
-	N 020 139 1	hose 4 X 1		*	
1	-	700 MM		1	
-	N 020 353 5	hose		*	
2	-	40 MM		2	
3	047 129 545	bracket		1	
4	999 703 239 00	bonded rubber buffer		3	
5	N 012 226 5	spring washer		9	
6	900 076 010 02	hexagon nut		6	
7	N 011 524 7	washer		6	
8	N 010 215 13	hexagon-head bolt M 6 X 15		4	
9	047 129 547	bracket		1	
10	477 129 611 D	air cleaner ready for installation		1	
10A	477 129 615 D	air cleaner cover without clamp		1	
10B	055 129 635	retaining clip		4	
-	999 703 048 40	plug for cover		1	
11	021 129 620	air cleaner cartridge		1	
12	047 133 083	intake manifold		1	XJ XK XF XH
13	999 512 350 02	hose clamp 80-100		3	
14	047 133 367 E	hose use also: 477.133.579 999.501.029.30 N .024.125.2		1	
-	E 477 133 579	spacer sleeve		1	
-	999 703 385 40	plug		1	

Pos	Part Number	Name	Remarks	Qty	Model
-	N 024 125 2	hose clamp 9 X 19		1	
15	N 024 521 1	hose clamp A 12 X 126		1	
16	900 075 014 02	hexagon-head bolt M 6 X 18		1	
17	900 151 029 02	washer		1	
18	047 133 367 C	hose		1	
(18)	047 133 367 B	hose		1	(S)
-	047 131 467	screw socket		1	(S)
-	N 011 565 3	washer		2	(S)
-	900 078 005 01	hexagon nut M 14 X 1,5		1	(S)
-	N 020 343 1	hose		*	
19	-			1	
20	999 512 346 00	hose clamp LC 16 - 25		2	
21	049 133 379 A	gasket		1	
22	900 067 009 02	pan-head screw M 6 X 15		6	
23	477 133 523	retainer spring		1	
24	047 133 091	spacer sleeve		1	
		- -- E N D -- -			

Pos	Part Number	Name	Remarks	Qty	Model

Model	Year	MG	SG	Illustration	Restrictions	Update				
924	79	1	06	106-05		187	10:49	06.04.2005	PORSCHE	PET	PORSCHE

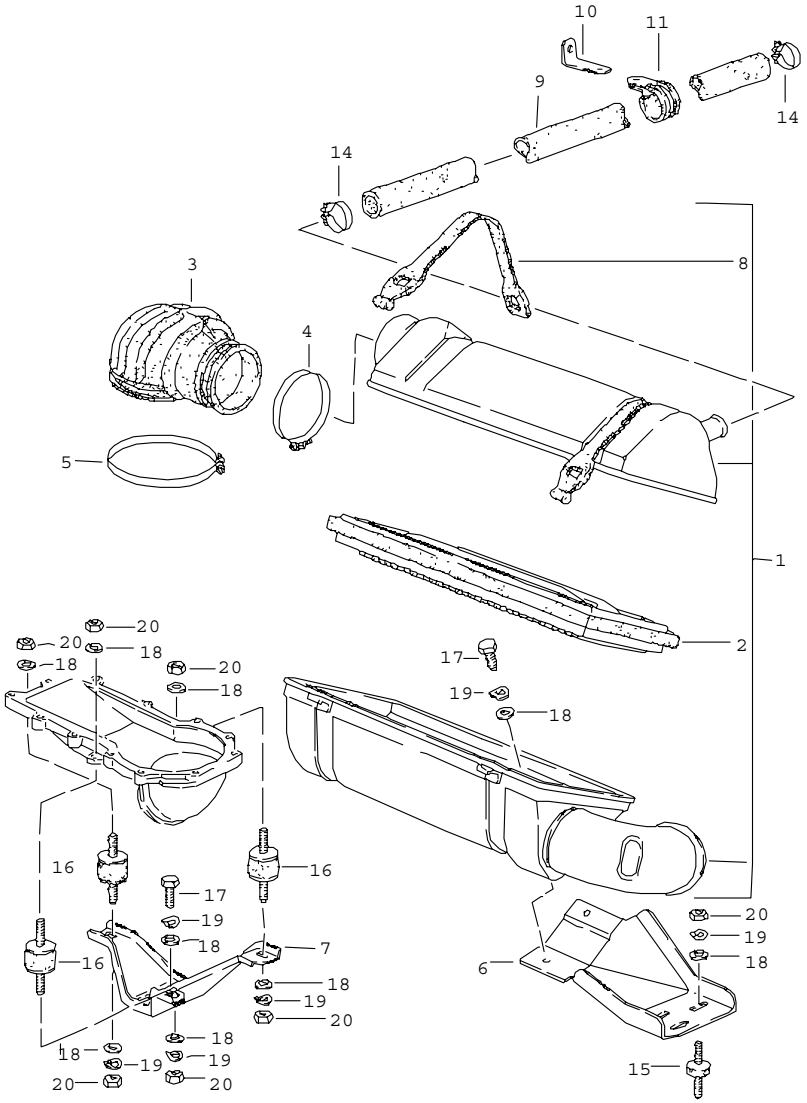

Pos	Part Number	Name	Remarks	Qty	Model
		air filter system			TURBO
1	931 110 021 03	air cleaner ready for installation		1	
2	931 110 121 00	air cleaner cartridge		1	
3	931 110 358 00	air box		1	
4	N 024 326 1	hose clamp		1	
5	N 024 334 1	hose clamp		1	
6	477 809 085	support		1	
7	477 805 513	support		1	
8	928 110 363 01	restraining strap		2	
9	931 107 394 02	hose 22 X 31 650 MM		1	
9	931 107 394 02	hose 22 X 30 650 MM		1	
10	931 107 159 00	support		1	
11	999 511 077 02	clamp		1	
14	999 512 300 02	hose clamp		2	
15	931 110 191 00	bonded rubber buffer		3	
16	999 703 239 00	bonded rubber buffer		3	
17	N 010 210 13	hexagon-head bolt M 6 X 10		3	
18	N 011 524 7	washer		10	
19	N 012 226 5	spring washer		15	
20	900 076 010 02	hexagon nut		8	
		- -- E N D -- -			

Model	Year	MG	SG	Illustration	Restrictions	Update	10:49	06.04.2005	PORSCHE PET PORSCHE
924	79	1	07	107-00		187			

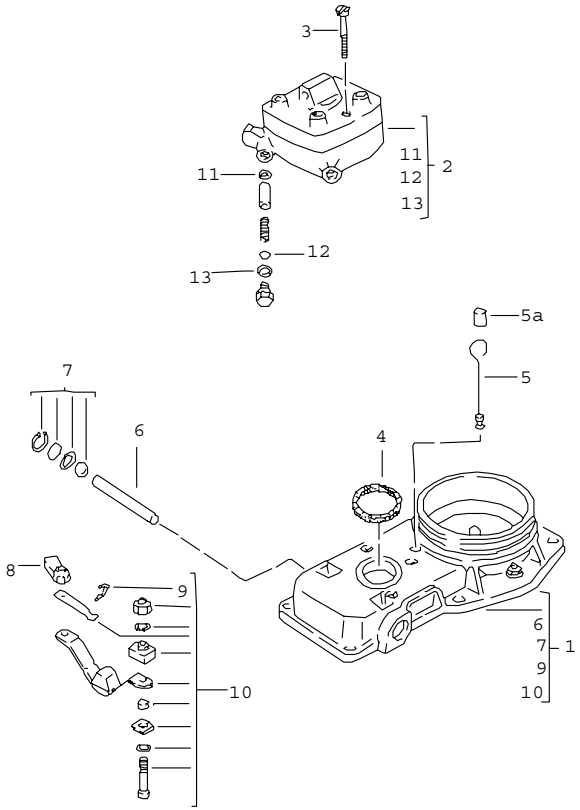

Pos	Part Number	Name	Remarks	Qty	Model
		k-jetronic mixture control unit			924
1	047 133 471 A	mass air flow		1	
2	> 063 133 481	fuel distributor		1	
3	049 133 483	pan-head screw		3	
4	049 133 485 A	sealing ring		1	
5	911 110 934 00	plug		1	
5A	049 133 777 A	plug blue		1	
6	E 911 110 941 00	straight pin		1	
7	* 911 110 946 00	parts kit control lever		1	
8	911 110 929 00	safety contact		1	
9	911 110 921 00	clamp		1	
10	* 911 110 947 00	parts kit stop		1	
11	911 110 936 00	sealing ring		1	
12	911 110 937 00	shim 0,10 MM		X	
(12)	911 110 937 01	shim 0,50 MM		X	
13	900 123 033 20	sealing ring		1	
		- -- E N D -- -			

Model	Year	MG	SG	Illustration	Restrictions	Update				
924	79	1	07	107-05		187	10:50	06.04.2005	PORSCHE	PET	PORSCHE

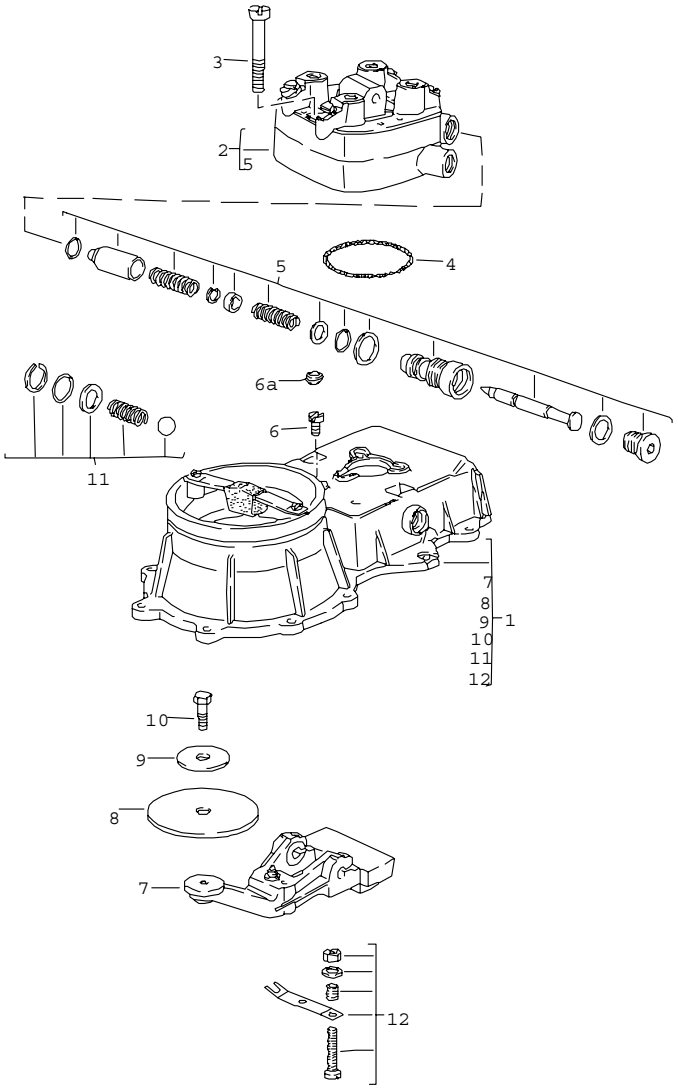

Pos		Part Number	Name	Remarks	Qty	Model
			k-jetronic mixture control unit			TURBO
1		931 110 906 00	mass air flow		1	
2	>	931 110 907 00	fuel distributor		1	
3		900 146 045 02	oval-head screw		3	
4		931 110 908 00	sealing ring		1	
5	*	928 110 920 01	parts kit pressure regulator		1	
6		931 110 910 00	screw plug		1	
6A		931 110 913 00	plug blue		1	
7		931 110 909 00	control lever		1	
8		911 110 943 02	air flow sensor plate		1	
9		911 110 960 00	support washer		1	
10	E	931 110 911 00	hexagon-head bolt		1	
11	*	911 110 946 00	parts kit control lever		1	
12	*	931 110 912 00	parts kit stop		1	
			- -- E N D -- -			

Model	Year	MG	SG	Illustration	Restrictions	Update	10:50	06.04.2005	PORSCHE PET PORSCHE
924	79	1	07	107-10		187			

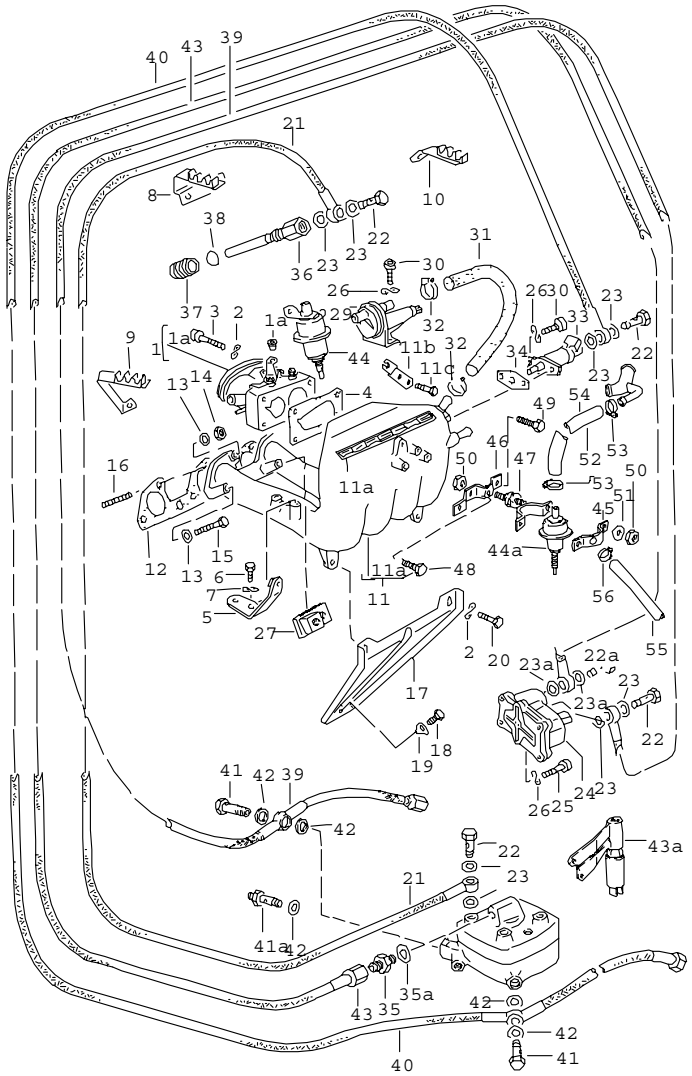

Pos	Part Number	Name	Remarks	Qty	Model
		k-jetronic			924
1	E 047 133 063	throttle body	/LL	1	
1	E 047 133 063 F	throttle body	AUT. 79	1	
1	E 047 133 063 B	throttle body	/RL	1	
-	056 129 777	plug		1	(S)
1A	823 721 567	bearing sleeve		1	
2	N 012 241 11	spring washer		6	
3	N 014 717 2	pan-head screw M 8 X 40		4	
4	049 133 073 B	gasket		1	
5	047 133 093 A	support		1	
6	N 010 215 13	hexagon-head bolt M 6 X 15		2	
7	N 012 226 5	spring washer		2	
8	E 047 133 192	support		1	
9	047 133 191 D	support		1	
10	047 133 191 C	support		1	
-	021 119 569 A	rubber sleeve		1	
11	E 047 133 201	intake manifold	-78	1	
11	477 133 201	intake manifold	79	1	
11A	931 110 403 00	logo	79	1	
11B	047 133 239	support	/LL	1	
(11B)	047 133 239 D	support	/RL	1	
11C	N 010 215 13	hexagon-head bolt M 6 X 15		2	
-	N 012 226 5	spring washer		2	
12	* 477 133 227	gasket		1	
13	N 011 525 13	washer		8	
14	N 011 008 8	hexagon nut		4	
15	N 010 373 2	hexagon-head bolt M 8 X 72		4	

Pos	Part Number	Name	Remarks	Qty	Model
16	N 044 411 5	stud M 8 X 30		4	
17	048 129 723	bracket		1	
18	900 075 087 02	hexagon-head bolt M 8 X 15		1	
19	999 039 001 00	tab washer		1	
20	N 010 240 7	hexagon-head bolt M 8 X 20		2	
21	047 133 315	injection line cyl. 1 and 2		2	
(21)	047 133 319	injection line cyl. 3		1	
(21)	047 133 321	injection line cyl. 4		1	
22	911 110 899 00	banjo bolt		11	
22A	900 175 002 02	screw		1	
23	900 123 050 20	sealing ring A 8 X 11,5		22	
23A	900 123 033 20	sealing ring A 10 X 14		2	
24	063 133 403	warm-up valve		1	
24	063 133 403 X	warm-up valve		1	
25	N 014 744 1	pan-head screw M 6 X 32		2	
26	N 012 226 5	spring washer		6	
27	477 133 535	support temperature switch		1	
29	047 133 453 A	auxiliary air regulator		1	
-	477 133 527	retaining clip		1	
30	N 014 703 2	pan-head screw M 6 X 18		4	
31	047 133 497 B	hose		1	
32	999 512 346 00	hose clamp 12-20		2	
33	930 606 107 00	electric starting valve		1	
34	063 906 179	gasket		1	
35	063 133 541	screw socket		1	
35A	068 130 233	sealing ring A 8 X 11,5		1	
36	047 133 551	injector valve		4	
37	063 133 555	socket		4	
38	034 133 557 E	o-ring		4	
39	E 047 133 625	fuel return line F >>92471 00287		1	
(39)	E 047 133 625 A	fuel return line F 92471 00288>>	-78	1	
		F 92481 00777>> F >>92481 05656			
		use also: 477.209.175 477.209.176.A 477.209.161			
(39)	047 133 625 C	fuel return line	79	1	
40	047 133 627	fuel supply line		1	
41	N 021 071 2	banjo bolt		2	
41A	E 047 133 691	screw socket	-78	1	
42	N 013 812 3	sealing ring A 12 X 15,5		4	
43	E 047 133 655	fuel control line	-78	1	
(43)	047 133 655 B	fuel control line	79	1	
-	047 133 688	support fuel line		1	
43A	477 133 525 D	solenoid valve with support	79	1	
44	E 047 131 013	throttle valve lift		1	(S)
-	E 047 131 457	support		1	(S)
		from 02/77			
44A	047 131 013 A	vacuum limiter		1	(S) (J) (USA) (CDN)

Pos	Part Number	Name	Remarks	Qty	Model
45	047 131 039	clip		2	
(46)	E 047 131 455	bracket		1	(S)
47	999 703 239 00	bonded rubber buffer		2	
48	N 010 215 13	hexagon-head bolt M 6 X 15		1	
49	900 075 014 02	hexagon-head bolt M 6 X 18		1	
50	900 076 010 02	hexagon nut		4	
51	N 012 226 5	spring washer		4	
-	N 020 359 1	hose		*	
52	-			1	
53	N 023 526 2	hose clamp A 9 X 18		4	
(54)	E 047 131 461	branch piece		1	(S)
-	N 020 361 2	hose		*	
55	-			1	
56	999 512 346 00	hose clamp LC 16 - 25		2	
>>>	047 198 597	installation set for warm-start problem		1	
-	E 477 133 517	solenoid valve		1	
-	477 133 509	retaining bracket		1	
-	900 067 008 02	pan-head screw M 6 X 12		2	
-	N 012 226 5	spring washer		2	
-	477 133 503	fuel supply line solenoid valve fuel distributor		1	
-	477 133 511 A	screw socket		1	
-	N 021 073 1	banjo bolt M 8 X 1		1	
-	900 123 050 20	sealing ring		2	
-	477 133 501	fuel return line		1	

Pos	Part Number	Name	Remarks	Qty	Model
-	477 133 507	banjo bolt		1	
-	911 110 899 00	banjo bolt		1	
-	477 133 511	screw socket		1	
-	900 123 050 20	sealing ring		2	
-	047 131 851 B	temperature switch		1	
-	N 011 116 5	hexagon nut		1	
-	477 133 535	support for temperature switch		1	
-	477 971 229	wiring harness		1	
-	477 971 850 A	tie-wrap		1	
-	900 123 050 20	sealing ring		2	
-	911 110 159 00	screw socket		1	
-	000 043 100 00	installation instructions		1	

- -- E N D -- -

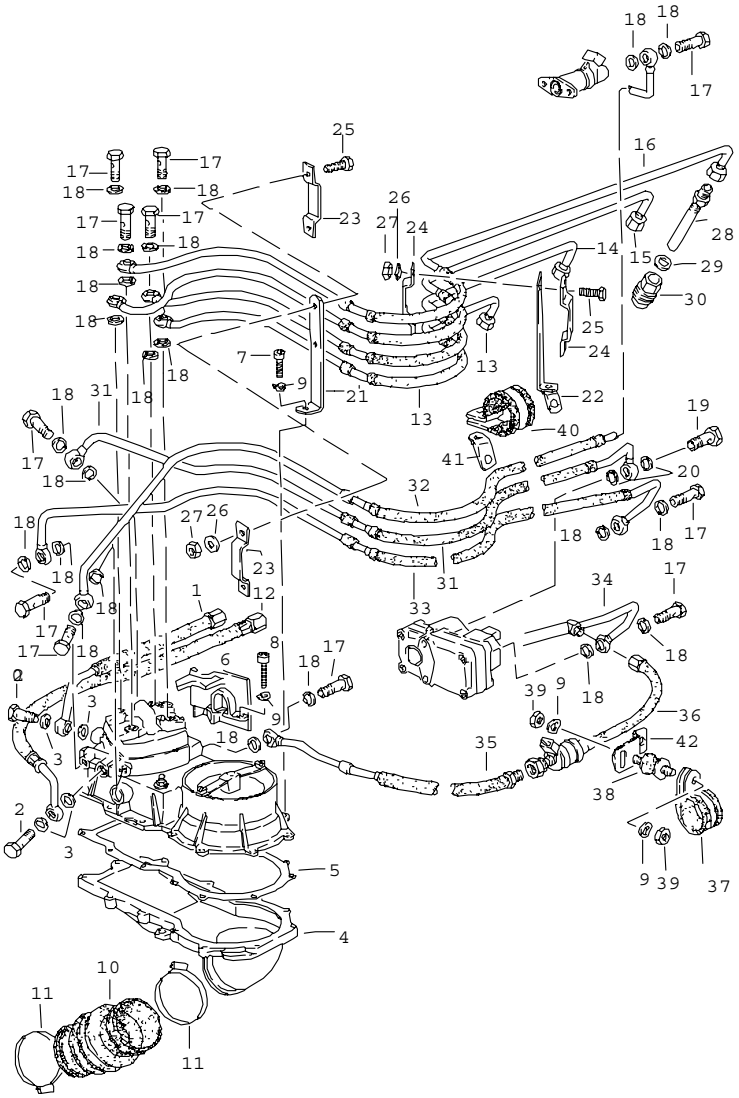

Pos	Part Number	Name	Remarks	Qty	Model
		k-jetronic			TURBO
1	931 110 301 03	fuel line intake mixture control unit		1	
2	900 175 020 02	banjo bolt		2	
3	900 123 005 30	sealing ring A 12 X 16		4	
4	931 110 035 00	mixture control unit lower part		1	
5	931 110 137 01	gasket		1	
7	900 067 011 02	pan-head screw M 6 X 20		10	
9	N 012 226 5	spring washer		10	
10	931 110 138 04	bellows		1	
11	999 512 317 00	clip 60 - 80		2	
12	E 931 110 302 04	fuel line return mixture control unit		1	
13	931 110 041 00	injection line cylinder 1		1	
14	931 110 042 00	injection line cylinder 2		1	
15	931 110 043 00	injection line cyl. 3		1	
16	931 110 044 00	injection line cyl. 4		1	
17	911 110 899 00	banjo bolt		9	
18	900 123 050 20	sealing ring A 8 X 11,5		18	
19	900 175 002 02	screw		1	
20	N 013 806 2	sealing ring A 10 X 14		2	
21	931 110 131 01	support		1	
22	931 110 190 02	support		1	
23	E N 028 550 1	clip 4 X 7		2	

Model	Year	MG	SG	Illustration	Restrictions	Update			
924	79	1	07	107-15		187	10:50	06.04.2005	PORSCHE PET PORSCHE

Pos	Part Number	Name	Remarks	Qty	Model	Pos	Part Number	Name	Remarks	Qty	Model
24	E N 028 453 1	clip 4 X 10		2							
25	E N 010 204 4	hexagon-head bolt M 4 X 10		4							
26	900 031 009 02	washer		4							
27	N 011 004 6	hexagon nut		4							
28	931 110 225 00	injector valve		4							
29	900 123 033 20	sealing ring A 10 X 13,5		4							
30	931 110 226 01	socket		4							
31	931 110 303 01	fuel line		1							
32	931 110 304 01	fuel line		1							
33	931 110 306 01	fuel line		1							
40	999 511 115 02	clip		1							
41	931 110 193 00	support		1							
		- -- E N D -- -									

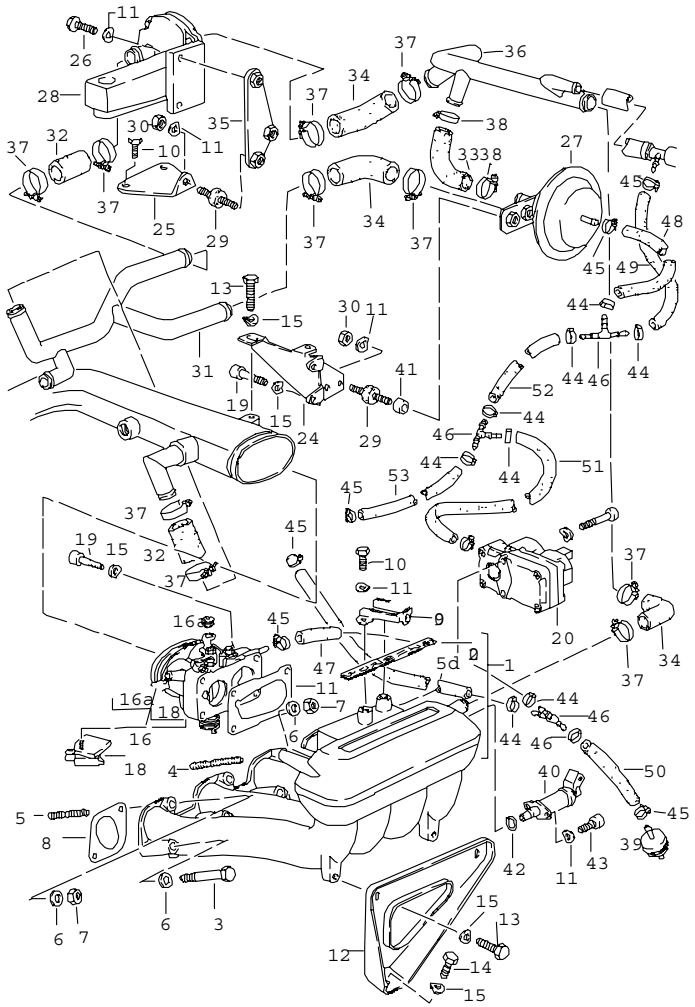

Pos	Part Number	Name	Remarks	Qty	Model
		k-jetronic			TURBO
1	931 110 059 01	intake manifold		1	
2	931 110 403 00	logo		1	
3	900 074 170 02	hexagon-head bolt M 8 X 68		4	
4	999 062 010 02	stud M 8 X 35		2	
5	999 062 044 02	stud M 8 X 30		2	
6	900 025 007 02	washer		8	
7	900 076 025 02	hexagon nut		4	
8	* 931 110 147 00	gasket		4	
9	931 110 166 01	support	/LL	1	
10	900 075 016 02	hexagon-head bolt M 6 X 16		4	
11	N 012 226 5	spring washer		14	
12	931 110 145 01	bracket		1	
13	N 010 240 16	hexagon-head bolt M 8 X 20		3	
14	900 075 087 02	hexagon-head bolt M 8 X 16		1	
15	N 012 241 8	spring washer		8	
16	931 110 061 02	throttle body	/LL	1	
16A	823 721 567	bearing sleeve		1	
17	049 133 073 B	gasket		1	
19	N 014 717 2	pan-head screw M 8 X 40		4	
20	931 606 105 00	warm-up valve		1	
20	931 606 105 X	warm-up valve		1	
21	N 044 703 3	pan-head screw M 6 X 45		2	
24	931 110 156 03	support		1	
25	931 110 162 00	retaining bracket		1	

Pos	Part Number	Name	Remarks	Qty	Model
26	900 075 010 02	hexagon-head bolt M 6 X 12		2	
27	930 110 173 00	vacuum limiter		1	
28	930 606 102 00	auxiliary air regulator		1	
29	931 110 191 00	bonded rubber buffer		3	
30	900 076 010 02	hexagon nut		4	
31	931 110 171 05	pipe		1	
32	931 110 173 01	hose 18 X 26 48 MM		2	
33	931 110 181 01	hose		1	
34	931 110 183 01	hose		3	
35	931 110 161 00	retaining bracket		1	
36	E 931 110 172 03	pipe		1	
37	999 512 237 02	hose clamp		10	
38	999 512 254 02	hose clamp		2	
39	931 110 321 00	check valve		1	
40	930 606 107 00	electric starting valve		1	
41	052 109 135	spacer sleeve		2	
42	999 701 395 50	o-ring		1	
43	N 014 740 2	pan-head screw M 6 X 16		2	
44	999 512 327 02	hose clamp		9	
45	999 512 159 02	hose clamp		7	
46	999 137 004 40	t-socket		3	
-	999 239 010 40	hose		*	
47	-	35 MM		1	
48	-	50 MM		1	
49	-	85 MM		1	
50	-	110 MM		1	
51	-	130 MM		1	
52	-	200 MM		1	
53	-	260 MM		1	
54	-	500 MM		1	

- -- E N D -- -

Model	Year	MG	SG	Illustration	Restrictions	Update			
924	79	1	07	107-25		187	10:51	06.04.2005	PORSCHE PET PORSCHE

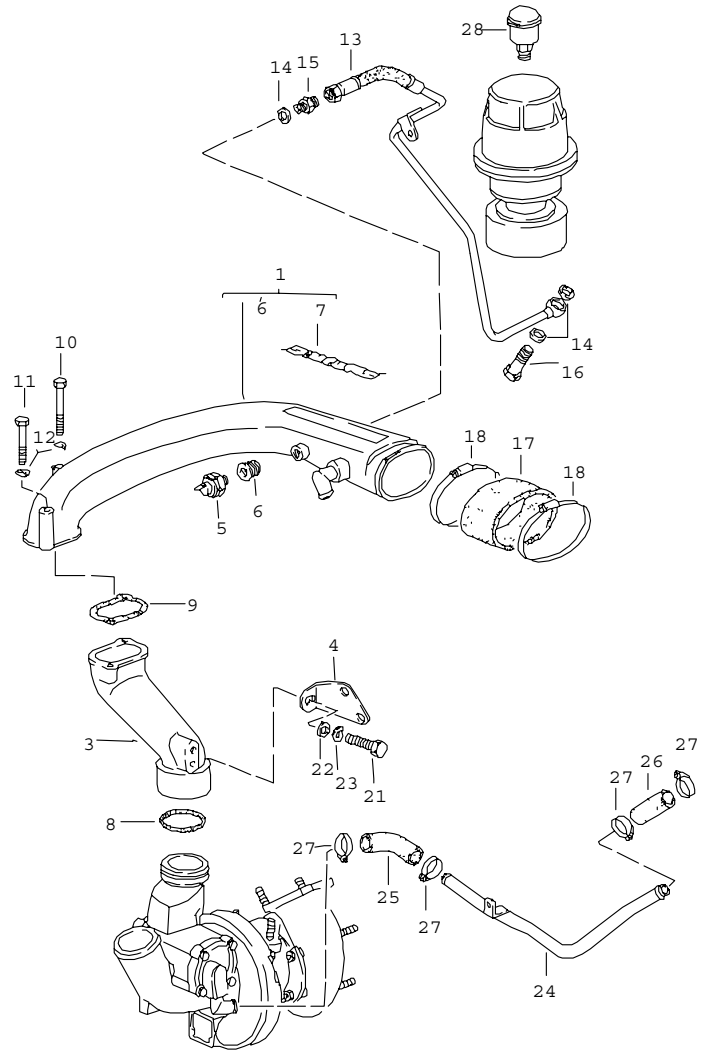

Pos	Part Number	Name	Remarks	Qty	Model
		turbocharging			TURBO
1	931 110 051 01	pressure pipe		1	
3	931 110 160 02	pressure pipe		1	
4	931 110 155 01	support		1	
5	930 606 101 00	switch		1	
6	930 110 367 01	threaded insert		1	
7	E 931 110 405 00	logo		1	
8	* 999 701 473 40	round seal 47 X 5,7		1	
9	* 931 110 152 01	gasket		1	
10	N 010 313 4	hexagon-head bolt M 6 X 85		1	
11	N 010 366 4	hexagon-head bolt M 6 X 55		1	
12	N 012 226 5	spring washer		2	
13	931 123 135 03	control line		1	
14	900 123 043 30	sealing ring A 12 X 15,5		3	
15	N 020 704 2	connection piece		1	
16	900 175 020 02	banjo bolt		1	
17	931 110 157 02	rubber sleeve		1	
18	999 512 350 02	hose clamp LA 80 X 100		2	
21	900 075 085 02	hexagon-head bolt M 8 X 20		3	
22	900 025 007 02	washer		3	
23	N 012 241 8	spring washer		3	
24	931 110 175 00	line		1	
25	931 110 185 01	hose		1	
-	999 239 007 40	hose		*	
26	-	40 MM		1	
27	999 512 254 02	hose clamp S 24/9		4	

Pos	Part Number	Name	Remarks	Qty	Model	Pos	Part Number	Name	Remarks	Qty	Model
28	931 123 155 00	bleeder valve		1							
		- -- E N D -- -									

Model	Year	MG	SG	Illustration	Restrictions	Update			
924	79	1	09	109-00		187	10:51	06.04.2005	PORSCHE PET PORSCHE

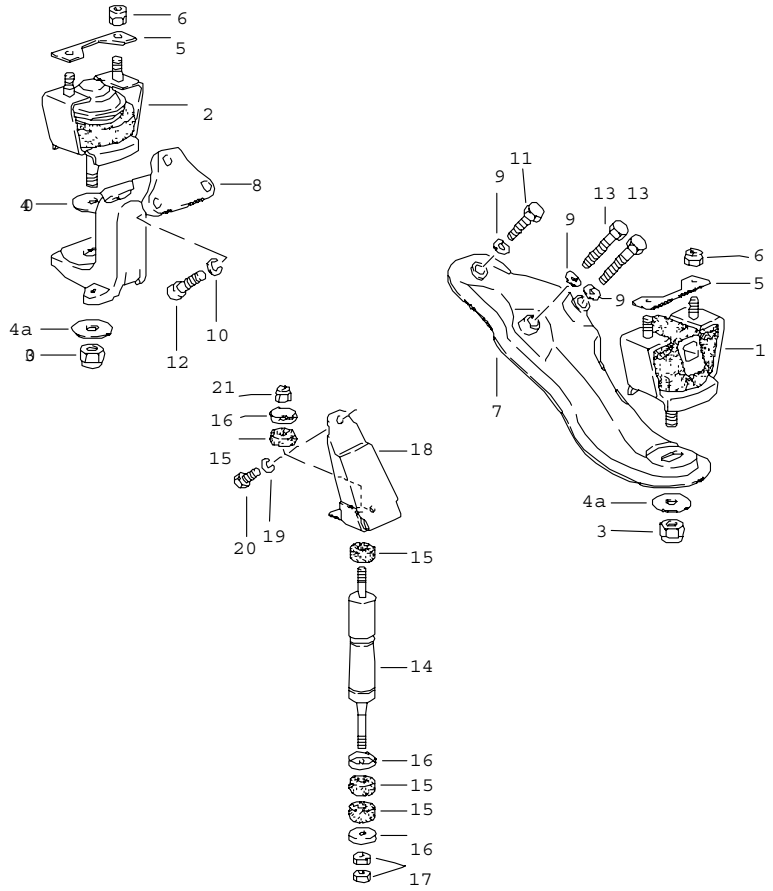

Pos	Part Number	Name	Remarks	Qty	Model
		engine suspension			
1	E 477 199 301	bonded rubber mounting	/L	1	924
1	E 477 199 301 A	bonded rubber mounting	/L	1	TURBO
2	477 199 303	bonded rubber mounting	/R	1	
3	N 021 131 1	lock nut		2	
4	803 199 347	washer 13 X 31		1	
4A	999 025 119 02	washer		2	
5	477 199 311 A	plate		2	
6	N 022 149 2	lock nut		4	
7	477 199 305 C	bracket	/L	1	924
7	931 375 021 01	bracket	/L	1	TURBO
8	477 199 308 C	bracket	/R	1	924
(8)	931 375 124 00	bracket	/R	1	TURBO
9	N 012 231 1	spring washer		3	
10	900 027 016 02	lock ring		3	
11	N 010 445 3	hexagon-head bolt M 10 X 45		1	
12	N 014 721 2	pan-head screw M 10 X 25		3	
13	N 010 460 2	hexagon-head bolt M 10 X 60		2	
-	E 931 375 901 00	installation set vibration damper for subsequent installat.		1	TURBO
		- -- E N D -- -			

Model	Year	MG	SG	Illustration	Restrictions	Update		
924	79	1	98	REP		187	8:39	12.04.2005

Pos	Part Number	Name	Remarks	Qty	Model
		repair kits			
>>	> 060 198 011	set of seals for cylinder block comprising:		1	
-	059 103 051 D	sealing ring		1	
-	E 048 115 147	sealing ring gasket gasket gasket		1	
-	046 115 189 A	gasket		1	
-	048 115 257	gasket o-ring		1	
-	046 121 041 A	gasket		1	
-	038 121 119 B	sealing ring		1	
-	N 043 854 1	sealing ring		1	
>>	> 047 198 012 A	set of seals for cylinder head comprising:		1	924
-	068 103 085 A	sealing ring		1	
-	048 103 095	sealing ring		1	
-	931 104 337 06	cylinder head gasket		1	
-	060 198 025 A	set of seals		1	
-	046 109 675 A	valve stem seal with assembly sleeve		8 2	
-	048 121 127 A	gasket		1	
-	059 127 311 A	gasket		1	
-	048 129 589 A	gasket		4	
-	477 133 227	gasket		1	
-	048 905 341 B	gasket		1	
-	056 905 261	gasket		1	
>>	> 931 100 901 00	set of seals for cylinder head comprising:		1	TURBO
-	068 103 085 A	sealing ring		1	
-	048 103 095	sealing ring		1	

Model	Year	MG	SG	Illustration	Restrictions	Update		
924	79	1	98	REP		187	8:39	12.04.2005

Pos	Part Number	Name	Remarks	Qty	Model
-	060 198 025 A	set of seals		1	
-	931 104 337 06	cylinder head gasket		1	
-	046 109 675 A	valve stem seal		8	
		with			
		assembly sleeve		2	
-	931 110 147 00	gasket		4	
-	931 110 152 01	gasket		1	
-	930 111 191 01	gasket		4	
-	048 121 127 A	gasket		1	
-	048 905 341 B	gasket		1	
-	993 111 195 00	sealing ring		1	
-	931 123 193 05	gasket		1	
-	931 111 191 10	gasket		1	
-	999 701 473 40	round seal		1	
-	056 905 261	gasket		1	
>>	> 060 198 041 A	set of seals		1	
		for oil sump			
		comprising:			
		gasket		1	
		gasket		1	
		gasket		1	
		gasket		2	
-	N 043 854 1	sealing ring		1	
>>	> 060 198 025 A	set of seals		1	
		for			
		cylinder head cover			
		comprising:			
		sealing strip		2	
		gasket		2	
>>	> 060 198 151	set of piston rings		X	924
		86,50 MM			
		comprising:			
		piston ring		1	
		groove 1			
		piston ring			
		groove 2			
		oil scraper ring		1	

Model	Year	MG	SG	Illustration	Restrictions	Update		
924	79	1	98	REP		187	8:39	12.04.2005

Pos	Part Number	Name	Remarks	Qty	Model
>>	> 060 198 153	set of piston rings 86,75 MM comprising: piston ring groove 1 piston ring groove 2 oil scraper ring		X 1 1 1	924
>>	> 060 198 155	set of piston rings 87,00 MM comprising: piston ring groove 1 piston ring groove 2 oil scraper ring		X 1 1 1	924
>>	> 931 103 901 00	set of piston rings 86,50 MM comprising: plain compression ring compression ring d-sf ring		X 1 1 1	M31.01
>>	> 931 103 901 25	set of piston rings 86,75 MM comprising: plain compression ring compression ring d-sf ring		X 1 1 1	M31.01
>>	> 931 103 901 50	set of piston rings 87,00 MM comprising: plain compression ring compression ring d-sf ring		X 1 1 1	M31.01
>>	> 046 198 401	connecting rod 1 set comprising: connecting rod		1 4	
-	E 059 105 425 A	connecting rod bolt		8	
-	059 105 427 A	hexagon nut		8	
-	E 059 105 431	connecting rod bush		4	
>>	> 046 105 701	connecting-rod bearing 1 set comprising:		1	
-	E 046 105 701	connecting-rod bearing		8	
>>	> 046 198 503 A	connecting-rod bearing 1 set undersize 0,25 mm comprising:		1	

Model	Year	MG	SG	Illustration	Restrictions	Update		
924	79	1	98	REP		187	8:39	12.04.2005

Pos	Part Number	Name	Remarks	Qty	Model
-	E 046 105 707	connecting-rod bearing		8	
>>	> 046 198 505 A	connecting-rod bearing 1 set undersize 0,50 mm		1	
-	E 046 105 713	connecting-rod bearing		8	
>>	> 046 105 719	connecting-rod bearing 1 set undersize 0,75 mm comprising:		1	
-	046 105 719	connecting-rod bearing		8	
>>	> 059 198 451	crankshaft bearing 1 set 60 MM $ M >> XK 00 3213 comprising:		1	924
-	059 105 501	crankshaft bearing thrust bearing upper		1	
-	059 105 531	crankshaft bearing thrust bearing lower		1	
-	E 059 105 561	crankshaft bearing numbers 1,2,4,5 upper		4	
-	E 059 105 591	crankshaft bearing numbers 1,2,4,5 lower		4	
>>	> 059 198 453	crankshaft bearing 1 set undersize 0,25 mm M >> XK 00 3213 comprising:		1	924
-	059 105 507	crankshaft bearing thrust bearing upper		1	
-	059 105 537	crankshaft bearing thrust bearing lower		1	
-	059 105 567	crankshaft bearing numbers 1,2,4,5 upper		4	
-	059 105 597	crankshaft bearing numbers 1,2,4,5 lower		4	

Model	Year	MG	SG	Illustration	Restrictions	Update		
924	79	1	98	REP		187	8:39	12.04.2005

Pos	Part Number	Name	Remarks	Qty	Model
>>	> 059 198 455	crankshaft bearing 1 set undersize 0,50 mm M >> XK 00 3213 comprising:		1	924
-	E 059 105 513	crankshaft bearing thrust bearing upper		1	
-	E 059 105 543	crankshaft bearing thrust bearing lower		1	
-	E 059 105 573	crankshaft bearing numbers 1,2,4,5 upper		4	
-	E 059 105 603	crankshaft bearing numbers 1,2,4,5 lower		4	
>>	> 059 198 457	1 set crankshaft bearing undersize 0,75 mm M >> XK 00 3213 comprising:		1	924
-	E 059 105 519	crankshaft bearing thrust bearing upper		1	
-	E 059 105 549	crankshaft bearing thrust bearing lower		1	
-	E 059 105 579	crankshaft bearing numbers 1,2,4,5 upper		4	
-	E 059 105 609	crankshaft bearing numbers 1,2,4,5 lower		4	
>>	> 046 198 451	crankshaft bearing 1 set 64 MM $ comprising:		1	
-	046 105 501	crankshaft bearing thrust bearing		2	
-	046 105 561	crankshaft bearing numbers 1,2,4,5 upper		4	
-	046 105 591	crankshaft bearing numbers 1,2,4,5 lower		4	

Model	Year	MG	SG	Illustration	Restrictions	Update		
924	79	1	98	REP		187	8:39	12.04.2005

Pos	Part Number	Name	Remarks	Qty	Model
>>	> 046 198 453	crankshaft bearing 1 set undersize 0,25 mm comprising:		1	
-	046 105 507	crankshaft bearing thrust bearing		2	
-	046 105 567	crankshaft bearing numbers 1,2,4,5 upper		4	
-	E 046 105 597	crankshaft bearing numbers 1,2,4,5 lower		4	
>>	> 046 198 455	crankshaft bearing 1 set undersize 0,50 mm comprising:		1	
-	046 105 513	crankshaft bearing thrust bearing		2	
-	046 105 573	crankshaft bearing numbers 1,2,4,5 upper		4	
-	046 105 603	crankshaft bearing numbers 1,2,4,5 lower		4	
>>	> 046 198 457	crankshaft bearing 1 set undersize 0,75 mm comprising:		1	
-	046 105 519	crankshaft bearing thrust bearing		2	
-	046 105 579	crankshaft bearing numbers 1,2,4,5 upper		4	
-	046 105 609	crankshaft bearing numbers 1,2,4,5 lower		4	
>>	> 047 198 951	maintenance set for periodic maintenance comprising:	-79	1	924
-	060 198 025 A	set of seals		1	
-	N 043 854 1	sealing ring		1	
-	021 129 620	air cleaner cartridge		1	
-	931 107 701 00	oil filter		1	

Model	Year	MG	SG	Illustration	Restrictions	Update		
924	79	1	98	REP		187	8:39	12.04.2005

Pos	Part Number	Name	Remarks	Qty	Model
-	930 110 076 00	fuel filter		1	
-	616 602 226 02	contact breaker point		1	
-	999 170 165 90	spark plug		4	
>>	> 931 100 931 00	maintenance set for periodic maintenance comprising:	79	1	TURBO
-	060 198 025 A	set of seals		1	
-	N 043 854 1	sealing ring		1	
-	931 110 152 01	gasket		1	
-	931 110 121 00	air cleaner cartridge		1	
-	931 107 701 00	oil filter		1	
-	931 110 149 00	fuel filter		1	
-	999 170 140 90	spark plug		4	
		vibration damper for subsequent installat.			
>>	> 931 375 901 00	installation set comprising:	/LL	1	TURBO
-	E 477 199 501 A	vibration damper	/R	1	
-	E 477 199 501 B	vibration damper	/L	1	
-	477 199 143	cover plate	/R	1	
-	E 999 512 311 02	clip	/R	1	
-	928 375 166 01	rubber buffer		4	
-	928 375 167 01	washer		2	
-	900 910 010 09	lock nut		2	
-	N 010 023 2	hexagon-head bolt		1	
-	E N 010 440 3	hexagon-head bolt		1	
-	N 011 527 12	washer		2	
-	N 022 149 2	lock nut		1	
-	N 011 525 13	washer		1	
		- -- E N D -- -			

Model	Year	MG	SG	Illustration	Restrictions	Update				
924	79	2	01	201-00		187	10:51	06.04.2005	PORSCHE	PET	PORSCHE

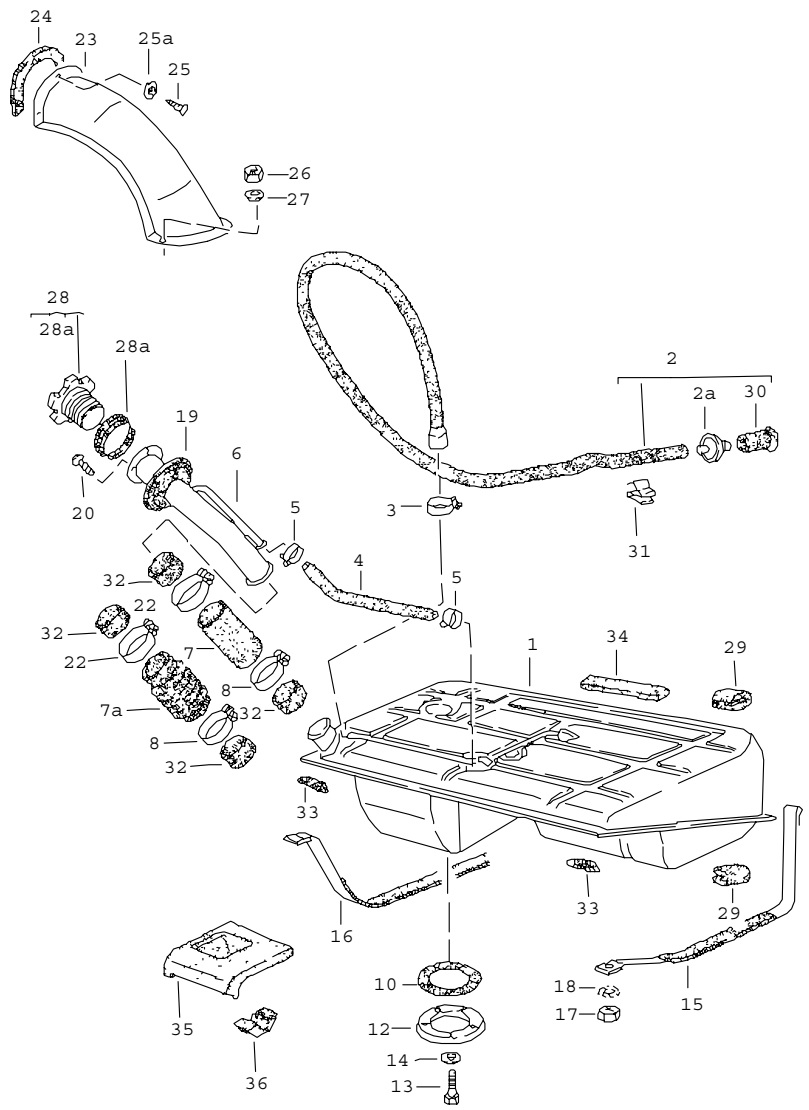

Pos	Part Number	Name	Remarks	Qty	Model
		fuel tank			
1	477 201 021 F	fuel tank F >>92491 03157 use also: 928.201.081.04 944.356.557.00 477.201.159.C shorten 530 MM		1	924
-	928 201 081 04	fuel filter		1	
-	944 356 557 00	fuel hose		1	
-	477 201 159 C	breather hose		1	
(1)	477 201 021 F	fuel tank F 92491 03158>> F 92494 00051>> use also: 477.201.159.C shorten 530 MM		1	924/TURBO
2	477 201 115	breather hose		1	
2A	810 201 186 A	bleeder valve		1	
3	311 133 343 A	hose clamp		1	
-	N 020 363 1	hose		*	
4	-			1	
5	999 512 346 00	hose clamp LC 16-25		2	
6	E 477 201 129 B	filler neck		1	
7	N 901 235 01	hose shorten 50 MM		1	
8	999 512 348 02	hose clamp LA 40-60		1	
10	477 201 229	gasket		1	924
12	477 201 247	cover F >>92491 03157 F >>92494 00051		1	924
13	N 010 205 6	hexagon-head bolt M 5 X 10		5	924

Pos	Part Number	Name	Remarks	Qty	Model	Pos	Part Number	Name	Remarks	Qty	Model
14	E 803 919 131	sealing ring		5	924			- -- E N D -- -			
15	477 201 311 B	restraining strap lower	/L	1							
(15)	477 201 395	restraining strap upper	/L	1							
16	477 201 302	restraining strap	/R	1							
17	311 101 463	hexagon nut M 8		2							
18	N 012 108 2	serrated lock washer		2							
19	477 201 317	gasket		1							
20	N 014 086 4	tapping screw B 3,5 X 13		4							
22	111 501 159 B	hose clamp 44 - 64		1							
23	477 201 347 C	cover		1							
24	477 201 351	gasket		1							
25	N 013 959 3	tapping screw B 3,5 X 16		3							
25A	900 151 028 02	washer		3							
26	N 011 005 14	hexagon nut		2							
27	900 025 003 02	washer		2							
-	N 020 902 1	tie-wrap 6,5 X 210		1							
28	477 201 551	cover		1							
28A	477 201 557	gasket		1							
29	481 201 647	intermediate piece		4							
30	321 201 890 A	end piece		1							
31	477 971 939	cable terminal		12							
32	944 201 217 00	hose		2							
33	477 201 295 B	intermediate layer		1							
34	477 201 295 B	intermediate layer		4							
35	477 863 160	gasket		1							
36	477 863 162 A	sound absorber		2							

Model	Year	MG	SG	Illustration	Restrictions	Update	10:52	06.04.2005	PORSCHE PET PORSCHE
924	79	2	01	201-05		187			

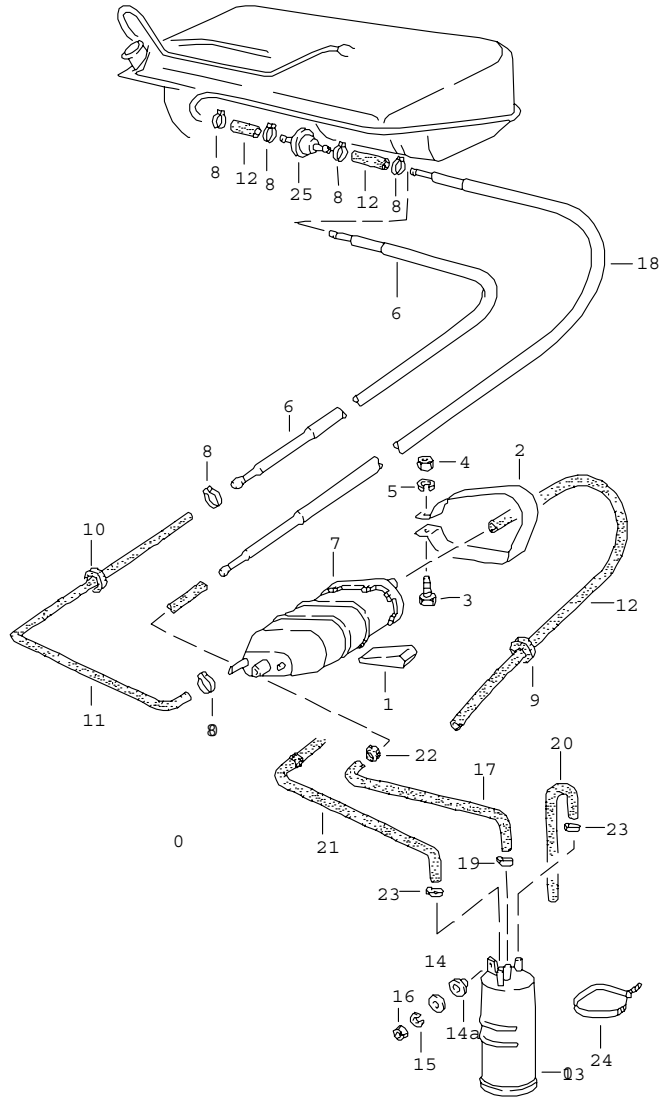

Pos	Part Number	Name	Remarks	Qty	Model
		carbon canister			924
		only together with engine 92 KW (125 DIN-PS)			(AUS)
8	311 133 343 A	hose clamp		2	
-	N 020 374 1	hose		*	
12	-			1	
13	993 201 221 01	carbon canister		1	
14	900 151 029 02	washer		2	
14A	477 201 279	sleeve		2	
15	N 012 006 4	lock ring		2	
16	900 076 010 02	hexagon nut		2	
-	999 181 716 50	hose 9,5 X 15,5		*	
17	-	630 MM		1	
18	477 201 743 A	pipeline		1	
19	N 023 577 2	hose clamp A 9 X 14		1	
-	N 020 374 1	hose		*	
20	-	600 MM		1	
21	-	1115 MM		1	
22	021 119 569 A	rubber sleeve		2	
23	999 512 265 02	hose clamp		2	
24	N 020 906 3	tie-wrap 6,5 X 390		1	
25	810 201 186 A	bleeder valve		1	
		- -- E N D -- -			

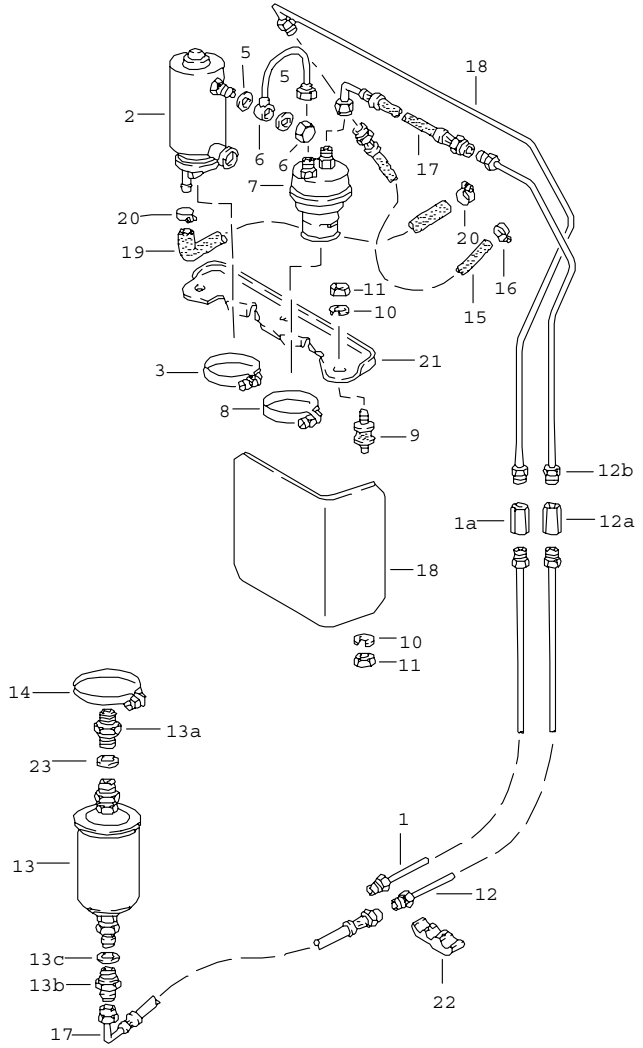

Pos	Part Number	Name	Remarks	Qty	Model
		fuel system			924
		F >>92461 04800			
1	477 209 175	fuel line return		1	
1A	477 209 161	connecting piece		1	
1B	E 477 209 176	fuel line return use also: 477.209.071 A		1	
2	810 906 091 B	fuel pump		1	
3	999 512 349 02	hose clamp		1	
4	E 477 209 067 A	fuel line		1	
5	900 123 033 20	sealing ring A 10 X 13,5		2	
6	E N 011 065 1	cap nut M 10 X 1		1	
7	477 209 083	pressure accumulator 20 CCM		2	
8	111 501 159 B	hose clamp 44-64 MM		1	
9	810 906 219 A	bonded rubber mounting		3	
10	N 012 006 4	lock ring		6	
11	900 076 010 02	hexagon nut		6	
12	E 477 209 177	fuel line use also: 477.209.075.A		1	
12A	477 209 169	connecting piece		1	
12B	477 209 178	fuel line use also: 477.209.075.A		1	
13	930 110 076 00	fuel filter		1	
13A	930 110 199 00	screw socket		1	
13B	930 110 198 00	screw socket		1	
13C	900 123 007 30	sealing ring A 14 X 18		1	

Pos	Part Number	Name	Remarks	Qty	Model
14	111 501 159 B	hose clamp A 12 X 63		1	
15	477 209 071	fuel line return		1	
16	999 512 554 00	hose clamp LB 12 - 20		1	
17	E 477 209 075	fuel hose		2	
18	E 477 209 077	heat protection plate		1	
19	477 209 199 A	fuel hose		1	
20	N 023 526 2	hose clamp A 9 X 18		4	
21	477 209 373	support		1	
22	911 356 543 01	support		15	
23	N 013 812 3	sealing ring A 12 X 15,5		1	
		- -- E N D -- -			

Pos	Part Number	Name	Remarks	Qty	Model

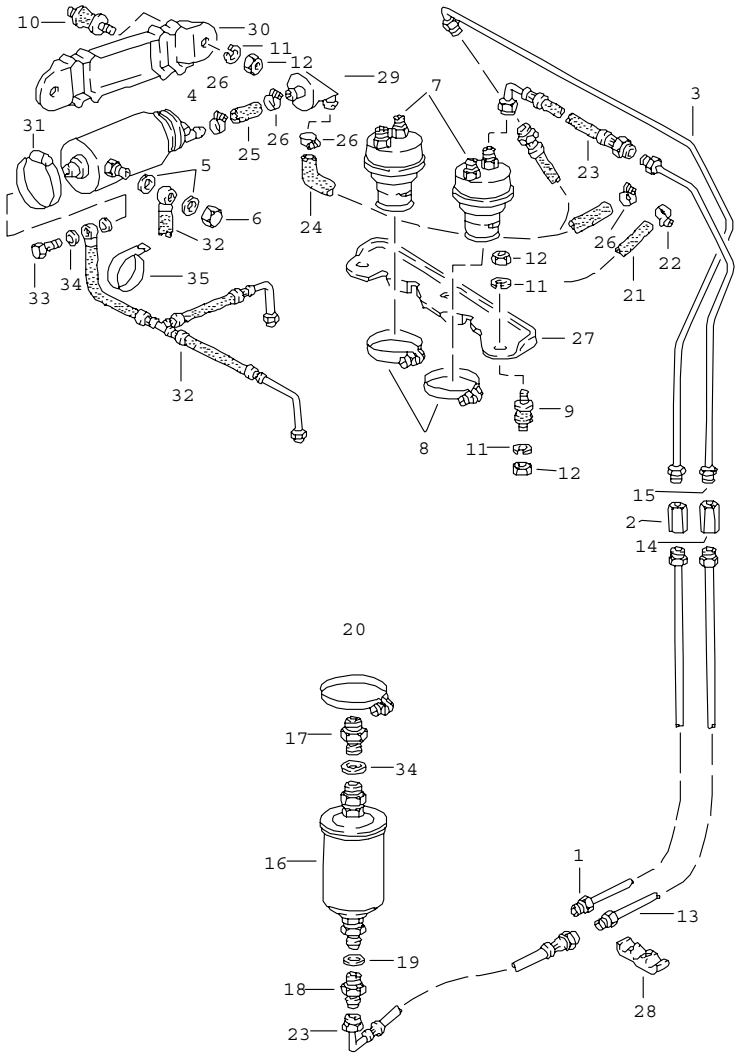

Pos	Part Number	Name	Remarks	Qty	Model
		fuel system F 92461 04800>> F >>92481 99999			924
1	477 209 175	fuel line return		1	
2	477 209 161	connecting piece		1	
3	E 477 209 176	fuel line return F >>92481 00776 use also: 477.209.071.A		1	
(3)	477 209 176 A	fuel line return F 92481 00777>>		1	
4	810 906 091 B	fuel pump F >>92471 00713		1	
(4)	911 608 102 00	fuel pump F 92471 00714>>		1	
5	900 123 033 20	sealing ring A 10 X 13,5		2	
6	E N 011 065 1	cap nut M 10 X 1		1	
7	477 209 083	pressure accumulator		2	
8	111 501 159 B	hose clamp 44 - 64 MM		2	
9	810 906 219 A	bonded rubber mounting		3	
10	944 610 115 00	bonded rubber mounting		X	
11	N 012 006 4	lock ring B 6		X	
12	900 076 010 02	hexagon nut M 6		X	
13	E 477 209 177	fuel line F >>92481 00776 use also: 477.209.075.A		1	
(13)	477 209 177 A	fuel line F 92481 00777>>		1	
14	477 209 169	connecting piece		1	

Pos	Part Number	Name	Remarks	Qty	Model
15	477 209 178	fuel line F >>92481 00776		1	
		use also: 477.209.075.A			
(15)	477 209 178 A	fuel line F 92481 00777>>		1	
16	930 110 076 00	fuel filter		1	
17	930 110 199 00	screw socket		1	
18	930 110 198 00	screw socket		1	
19	900 123 007 30	sealing ring A 14 X 18		1	
20	111 501 159 B	hose clamp A 12 X 63		1	
21	477 209 071	fuel line return F >>92471 00287		1	
(21)	477 209 071 C	fuel hose return F 92471 00288>>		1	
22	999 512 554 00	hose clamp LB 12 - 20		1	
23	E 477 209 075	fuel hose F >>92471 00287		2	
(23)	477 209 075 A	fuel hose F 92471 00288>>		2	
24	477 209 199 A	fuel hose		1	
-	999 181 168 50	hose 12 X 18,5		*	
25	-	50 MM		1	
26	999 512 554 00	hose clamp A 9 X 18		4	
27	477 209 373	support		1	
28	911 356 543 01	support		15	
29	477 209 233	fuel filter		1	
30	911 608 105 00	support		1	
31	999 512 394 00	hose clamp		1	
32	477 209 241	fuel hose F >>92471 00713		1	
(32)	477 209 241 A	fuel hose F 92471 00714>>		1	
33	N 021 071 2	banjo bolt F 92471 00714>>		1	
34	N 013 812 3	sealing ring		2	
35	N 020 690 1	hose clamp		1	
		- -- E N D -- -			

Model	Year	MG	SG	Illustration	Restrictions	Update				
924	79	2	01	201-14		187	10:52	06.04.2005	PORSCHE	PET	PORSCHE

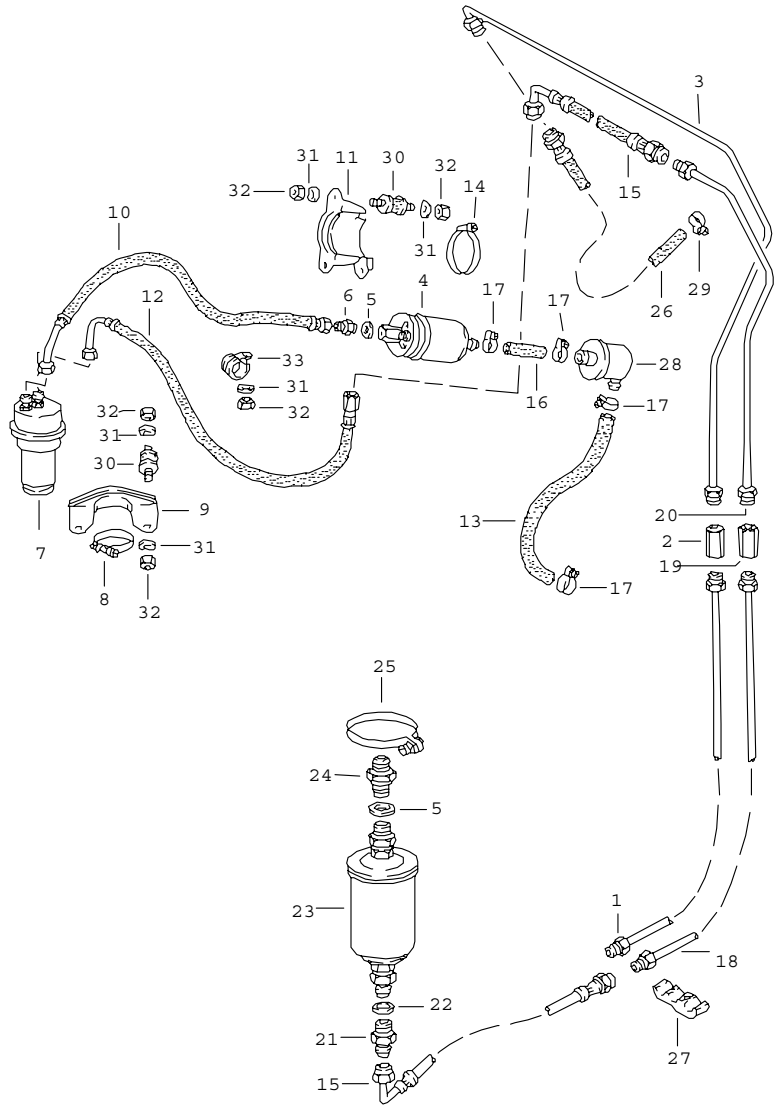

Pos	Part Number	Name	Remarks	Qty	Model
		fuel system			924
		F 92491 00001>> F >>92491 03157			
1	477 209 175	fuel line return		1	
2	477 209 161	connecting piece		1	
3	477 209 176 A	fuel line return		1	
4	911 608 102 00	fuel pump		1	
5	N 013 812 3	sealing ring A 12 X 15,5		2	
6	911 608 951 00	check valve		1	
7	931 110 140 00	pressure accumulator		1	
8	999 512 199 02	clip		1	
9	E 477 209 291	support		1	
10	477 209 093 A	fuel hose		1	
11	E 477 209 295 A	support		1	
12	477 209 047 A	fuel hose		1	
13	477 209 199 C	fuel hose		1	
14	999 512 394 00	hose clamp		1	
15	477 209 075 A	fuel hose		2	
-	999 181 168 50	hose 12 X 18,5		X	
16	-	50 MM		1	
17	N 023 526 2	hose clamp A 9 X 18		4	
18	477 209 177 A	fuel line		1	
19	477 209 169	connecting piece		1	
20	477 209 178 A	fuel line		1	
21	930 110 198 00	screw socket		1	
22	900 123 007 30	sealing ring A 14 X 18		1	
23	930 110 076 00	fuel filter		1	

Pos	Part Number	Name	Remarks	Qty	Model	Pos	Part Number	Name	Remarks	Qty	Model
24	930 110 199 00	screw socket		1							
25	111 501 159 B	hose clamp A 12 X 63		1							
26	477 209 071	fuel line		1							
27	911 356 543 01	support		15							
28	477 209 233	fuel filter		1							
29	999 512 554 00	hose clamp LB 12 - 20		1							
30	944 610 115 00	bonded rubber mounting		X							
31	N 012 006 4	lock ring B 6		X							
32	900 076 010 02	hexagon nut M 6		X							
33	N 020 690 1	hose clamp		1							
		- -- E N D -- -									

Model	Year	MG	SG	Illustration	Restrictions	Update				
924	79	2	01	201-15		187	10:53	06.04.2005	PORSCHE	PET	PORSCHE

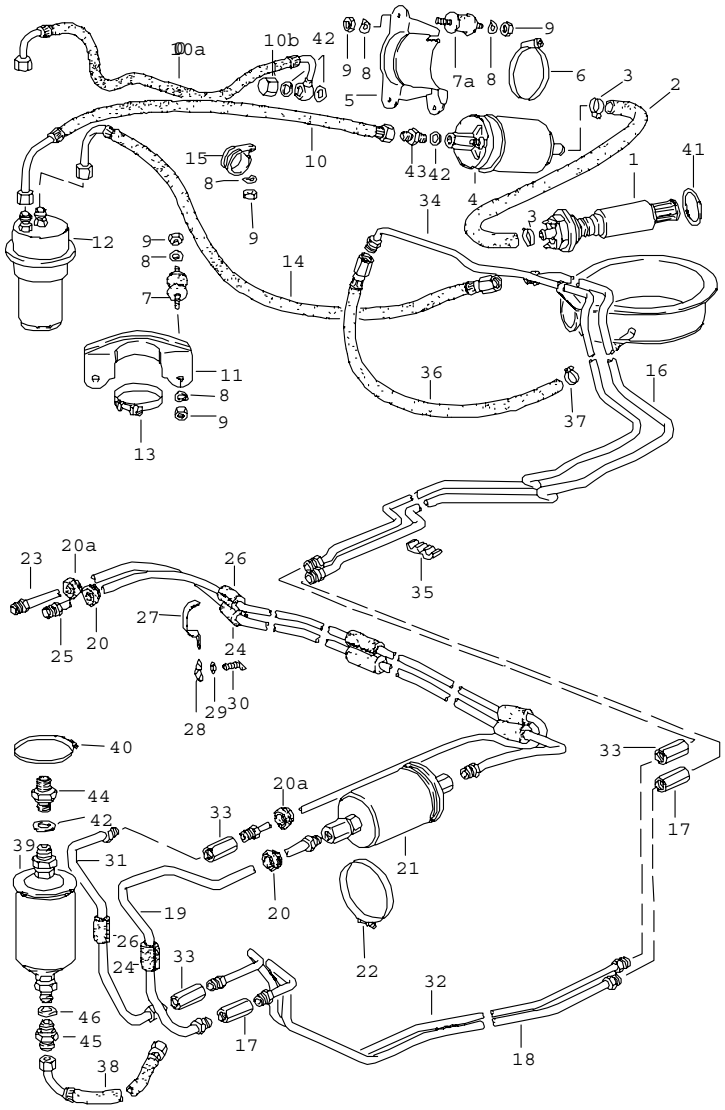

Pos	Part Number	Name	Remarks	Qty	Model
		fuel system F 92491 03158>> F 92494 00051>>			
1	928 608 013 00	in-tank fuel pump		1	
2	477 209 199 D	fuel hose		1	
3	N 023 526 2	hose clamp A 9 X 18		2	
4	911 608 102 00	fuel pump		1	
5	E 477 209 295 A	support		1	
6	999 512 394 00	hose clamp		1	
7	W 928 610 115 00	bonded rubber mounting		5	
7	944 610 115 00	bonded rubber mounting		5	
8	N 012 226 5	spring washer		10	
9	900 076 010 02	hexagon nut		10	
10	477 209 093 A	fuel hose		1	
11	E 477 209 291	support		1	
12	931 110 140 00	pressure accumulator 40 CCM		1	
13	999 512 199 02	clip		1	
14	477 209 047 B	fuel hose		1	
15	N 020 690 1	hose clamp		1	
16	477 209 178 A	fuel line		1	
17	477 209 169	connecting piece		2	
18	477 209 177 A	fuel line		1	
19	477 209 033 A	fuel line	/LL	1	TURBO
20	999 702 087 50	rubber sleeve		2	TURBO
20A	999 702 120 50	rubber sleeve		2	TURBO
21	931 110 149 00	fuel filter		1	TURBO
22	N 024 316 1	hose clamp 12 X 35		1	TURBO
23	477 209 057	fuel line	/LL	1	TURBO

Pos	Part Number	Name	Remarks	Qty	Model
24	477 209 303	hose piece		4	TURBO
25	477 209 059 A	fuel line return	/LL	1	TURBO
26	477 209 305	hose piece		4	TURBO
27	477 209 307	clip		3	TURBO
28	N 015 458 1	speed nut B 4,8 X 20		3	TURBO
29	900 025 003 02	washer		3	TURBO
30	N 013 975 6	tapping screw B 4,8 X 19		3	TURBO
(31)	477 209 035 A	fuel line		1	TURBO
31	477 209 035 A	fuel line		1	TURBO
32	477 209 175	fuel line return		1	TURBO
33	477 209 161	connecting piece		3	
34	477 209 176 A	fuel line return		1	
35	911 356 543 01	support		13	
36	477 209 071 C	fuel hose		1	
37	N 023 577 2	hose clamp		1	
38	477 209 047 A	fuel hose		1	924
39	930 110 076 00	fuel filter		1	924
40	111 501 159 B	hose clamp 9 X 56		1	924
41	928 201 187 02	sealing ring		1	
42	N 013 812 3	sealing ring A 12 X 15,5		2	
43	N 020 704 2	connection piece		1	
(43)	911 608 951 00	check valve		X	
44	930 110 199 00	screw socket		1	924
45	930 110 198 00	screw socket		1	924
46	900 123 007 30	sealing ring A 14 X 18		1	924

Pos	Part Number	Name	Remarks	Qty	Model
		- -- E N D -- -			

Model	Year	MG	SG	Illustration	Restrictions	Update			
924	79	2	02	202-00		187	10:53	06.04.2005	PORSCHE PET PORSCHE

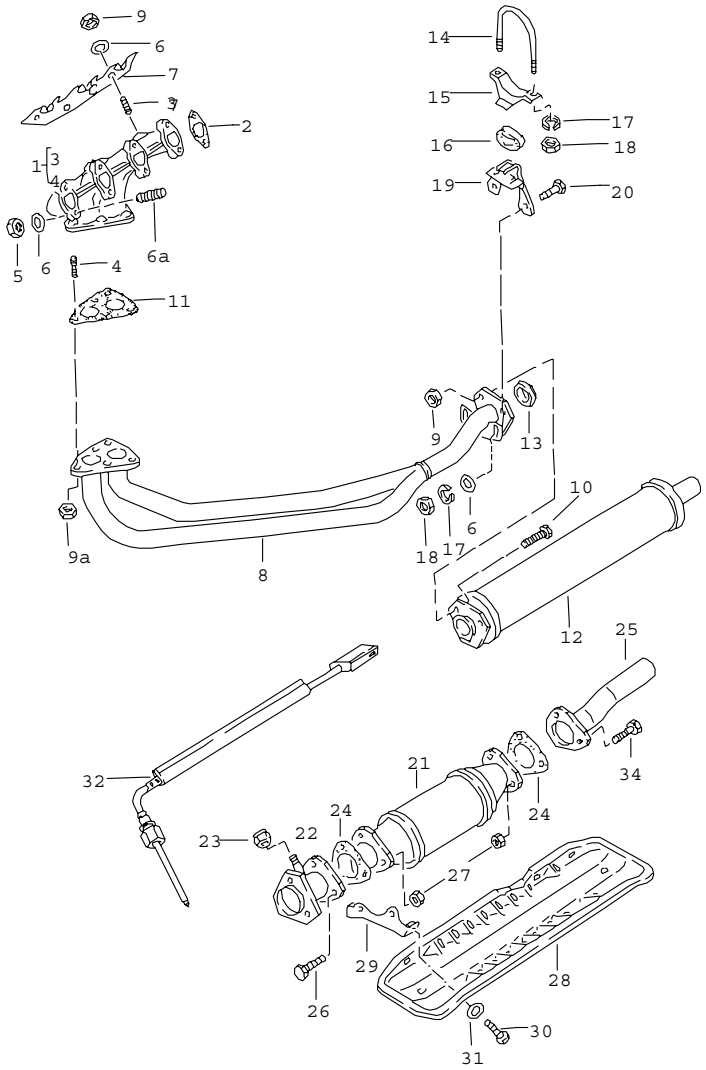

Pos	Part Number	Name	Remarks	Qty	Model
		exhaust system front muffler			924
1	048 129 587 D	exhaust manifold	/LL	1	
(1)	047 129 587 B	exhaust manifold	/RL	1	XJ
2	* 048 129 589 A	gasket		4	
3	N 044 511 1	stud M 8 X 18		3	
4	N 044 514 4	stud M 8 X 25		5	
5	N 900 850 01	hexagon nut M 8		8	
6	N 011 525 13	washer		11	
6A	N 044 411 5	stud M 8 X 30		8	
7	047 129 595 D	cover plate	/LL	1	
(7)	047 129 595 E	cover plate	/RL	1	XJ
8	477 253 101 Q	exhaust pipe	/LL	1	XK
(8)	478 253 101 D	exhaust pipe	/RL	1	XJ
9	803 253 111	lock nut		6	
9A	311 101 463	hexagon nut M 8		5	
10	N 010 353 3	hexagon-head bolt M 8 X 42		3	
11	477 253 115 E	gasket	/LL	1	
(11)	478 253 115 D	gasket	/RL	1	XJ
12	477 253 121 B	front muffler		1	
13	477 253 137	sealing ring		1	
14	477 253 139	clip		1	
15	944 111 307 00	support		1	
16	477 253 140 A	rubber mounting		1	
17	900 027 015 02	lock ring		2	
18	N 011 008 8	hexagon nut		2	
19	477 253 245	support		1	

Pos	Part Number	Name	Remarks	Qty	Model	Pos	Part Number	Name	Remarks	Qty	Model
20	N 010 240 16	hexagon-head bolt M 8 X 20 cover plate see group 8/01/05 - -- E N D -- -		2							

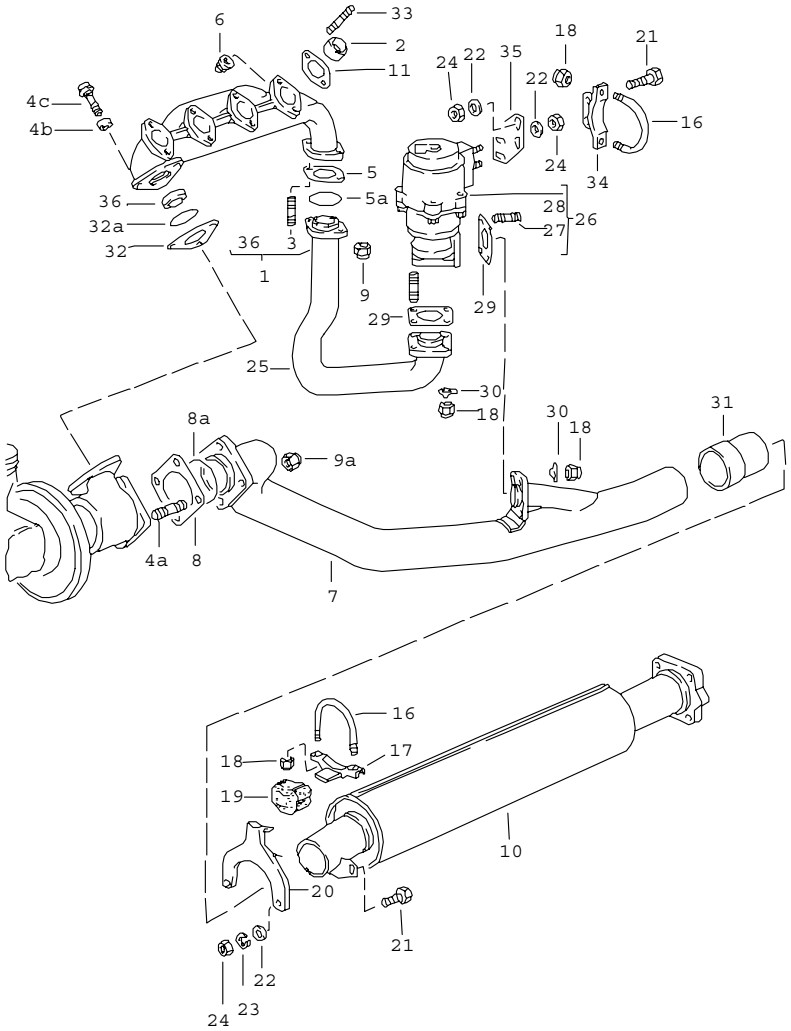

Pos	Part Number	Name	Remarks	Qty	Model
		exhaust system front muffler see technical information GR.2 NR.10/10A			TURBO
1	931 111 096 00	exhaust manifold		1	
2	931 111 132 00	intermediate piece		4	
3	900 081 051 02	stud M 10 X 35		2	
4A	900 081 050 02	stud M 10 X 28		4	
4B E	931 123 199 00	sleeve		3	
4C	931 123 197 00	shouldered bolt		3	
5 *	931 111 191 10	gasket		1	
5A *	993 111 195 00	sealing ring only together with exhaust manifold 931.111.903.00		1	
6	999 084 611 02	lock nut		8	
7	931 111 905 00	exhaust pipe		1	
8	931 111 192 02	gasket		1	
8A	944 111 205 02	gasket only together with turbocharger 931.123.002.06/09		1	
9	900 157 007 00	hexagon nut		5	
9A	N 900 730 01	lock nut		4	
10	931 111 901 00	front muffler		1	
11 *	930 111 191 01	gasket		4	
16	477 253 139	clip		2	
17	944 111 307 00	support		1	
18	900 910 097 02	lock nut		12	
19	477 253 140 A	rubber mounting		1	
20	931 111 061 02	hook		1	
21	N 010 240 16	hexagon-head bolt M 8 X 20		4	

Pos	Part Number	Name	Remarks	Qty	Model	Pos	Part Number	Name	Remarks	Qty	Model
22	900 025 007 02	washer		4							
23	900 027 015 02	lock ring		2							
24	900 076 025 02	hexagon nut		4							
25	931 123 033 04	wastegate line		1							
26	930 123 060 10	wastegate		1							
27	900 081 048 02	stud M 8 X 25		4							
28	900 081 049 02	stud M 8 X 32		4							
29	930 123 194 01	gasket		2							
30	999 039 001 00	tab washer		8							
31	931 111 902 00	sleeve		1							
32	* 931 123 193 02	gasket		1							
32A	* 993 111 195 00	sealing ring only together with turbocharger 931.123.002.06/09		1							
33	999 062 238 02	stud M 8 X 25		8							
34	931 123 143 01	support		1							
35	E 931 123 145 02	retaining bracket		1							
36	931 111 599 01	intermediate ring		1							
		cover plate see group 8/01/05									
		- -- E N D -- -									

Model	Year	MG	SG	Illustration	Restrictions	Update	10:54	06.04.2005	PORSCHE PET PORSCHE
924	79	2	02	202-15		187			

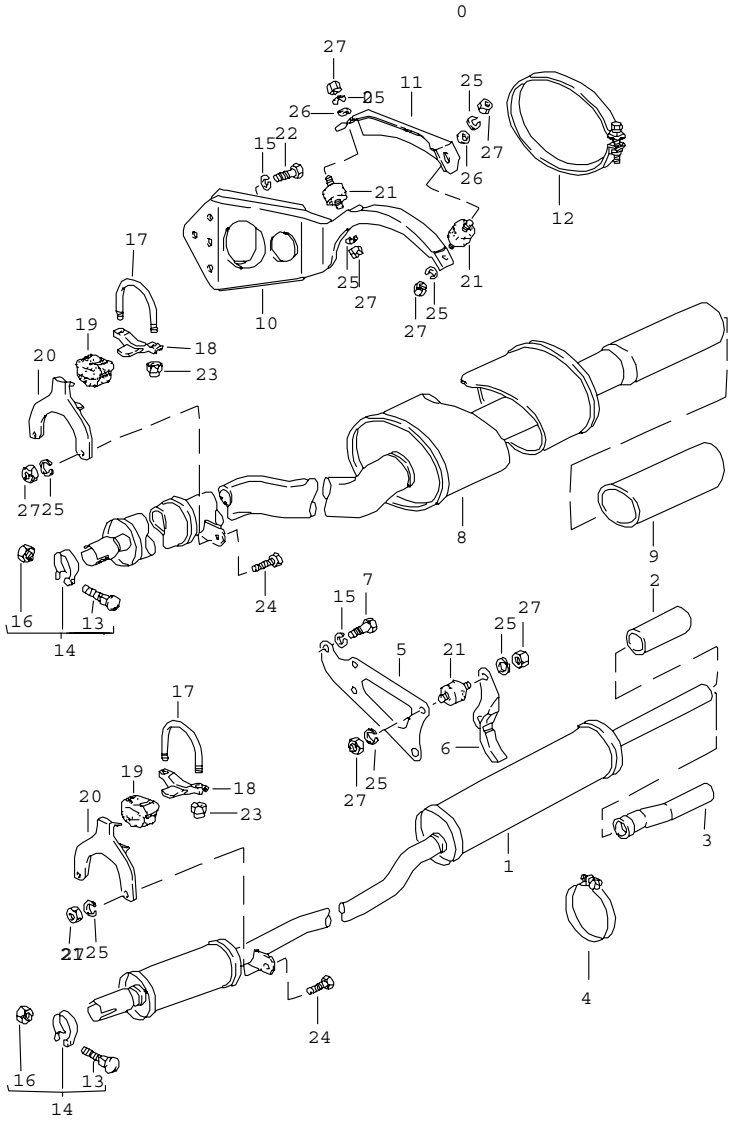

Pos	Part Number	Name	Remarks	Qty	Model
		exhaust system rear muffler			924
1	477 253 125 C	rear muffler round	-77	1	
(1)	E 477 253 125 E	rear muffler round	-77	1	(S)
2	477 253 191 B	ornamental exhaust pipe black	-77	1	
3	477 253 131 F	tail pipe with trailer coupling	-77	1	
4	N 900 190 01	clip	-77	1	
5	477 253 647	support	-77	1	
(5)	477 253 311 A	support	AUT. -77	1	
6	477 253 253	retaining bracket	-77	1	
(6)	477 253 253 A	retaining bracket	AUT. -77	1	
7	N 010 253 7	hexagon-head bolt M 10 X 22	-77	3	
8	477 253 125 S	rear muffler oval		1	
(8)	477 253 125 AA	rear muffler oval for 5-speed transmission		1	(S)
(8)	477 253 125 AA	rear muffler oval		1	(S)
9	477 253 191 C	ornamental exhaust pipe chrome		1	
(9)	477 253 191 B	ornamental exhaust pipe black		1	(S)
10	477 253 251	support for 5-speed transmission		1	
(10)	477 253 255 B	support for 4-speed transmission		1	

Pos	Part Number	Name	Remarks	Qty	Model	Pos	Part Number	Name	Remarks	Qty	Model
(10)	477 253 255 C	support for automatic transmission		1							
11	477 253 253 C	retaining bracket for 4-speed and automatic transmission		1							
(11)	477 253 253 D	retaining bracket for 5-speed transmission		1							
12	477 253 325 A	clip		1							
13	N 902 064 01	round head screw M 10 X 50		1							
14	191 253 139 A	clip		1							
16	N 011 010 6	hexagon nut		1							
17	477 253 139	clip		1							
18	944 111 307 00	support		1							
19	477 253 140 A	rubber mounting		1							
20	477 253 245	support		1							
21	477 253 149 C	bonded rubber buffer		2							
(21)	999 703 317 00	bonded rubber buffer with trailer coupling		2							
22	900 074 063 02	hexagon-head bolt M 10 X 55		3							
23	900 910 097 02	lock nut		2							
24	N 010 240 16	hexagon-head bolt M 8 X 20		2							
25	900 027 015 02	lock ring		6							
26	N 011 525 13	washer		2							
27	N 011 008 8	hexagon nut		6							
		cover plate see group 8/01/05									
		- -- E N D -- -									

Model	Year	MG	SG	Illustration	Restrictions	Update			
924	79	2	02	202-20		187	10:54	06.04.2005	PORSCHE PET PORSCHE

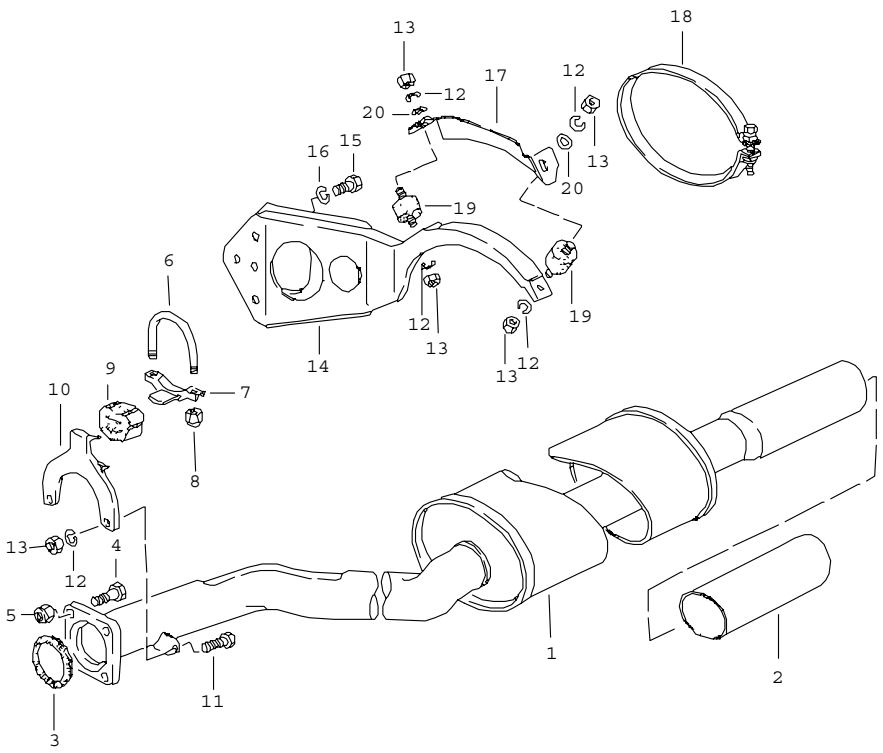

Pos	Part Number	Name	Remarks	Qty	Model
		exhaust system rear muffler			TURBO
1	931 111 050 06	rear muffler		1	
(1)	931 111 050 05	rear muffler		1	(S)
2	477 253 191 C	ornamental exhaust pipe chrome		1	
3	928 111 244 03	sealing ring		1	
4	900 155 033 00	hexagon-head bolt M 10 X 38		4	
5	999 084 047 02	lock nut		4	
6	477 253 139	clip		1	
7	944 111 307 00	support		1	
8	900 910 097 02	lock nut		2	
9	477 253 140 A	rubber mounting		1	
10	931 111 061 02	hook		1	
11	N 010 240 16	hexagon-head bolt M 8 X 20		2	
12	900 027 015 02	lock ring		6	
13	900 076 025 02	hexagon nut		6	
14	477 253 251	support		1	
15	N 010 253 7	hexagon-head bolt M 10 X 22		3	
16	900 027 016 02	lock ring		3	
17	477 253 253 D	retaining bracket		1	
18	477 253 325 A	clip		1	
19	477 253 149 C	bonded rubber buffer		2	
19	999 703 317 00	bonded rubber buffer with trailer coupling		2	
20	900 025 007 02	washer		2	
		cover plate see group 8/01/05			
		- -- E N D -- -			

Model	Year	MG	SG	Illustration	Restrictions	Update				
924	79	2	02	202-25		187	10:54	06.04.2005	PORSCHE	PET	PORSCHE

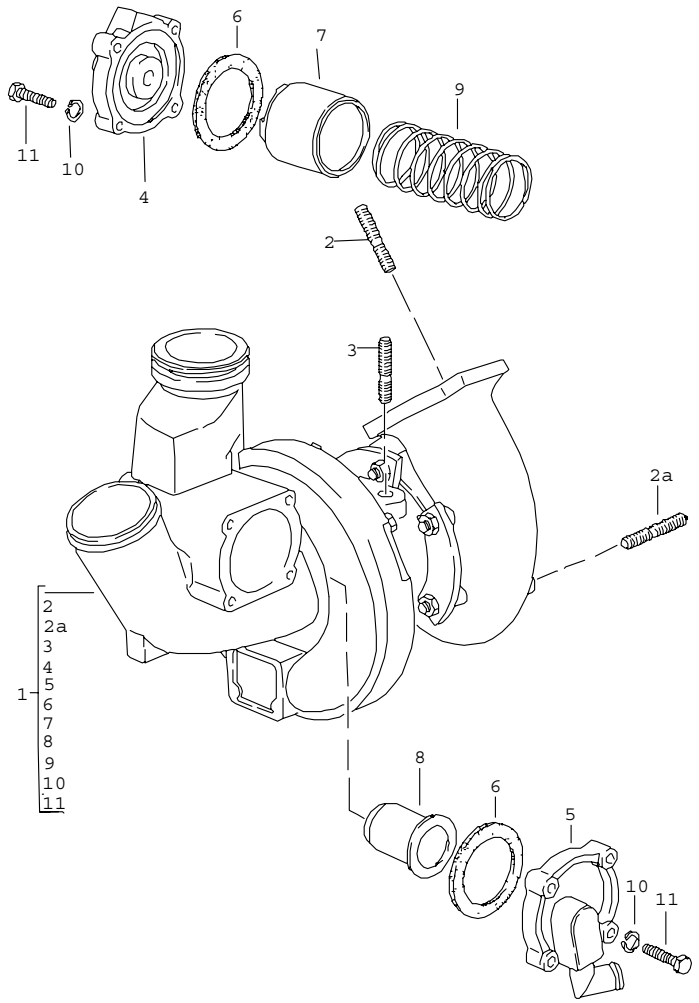

Pos	Part Number	Name	Remarks	Qty	Model
		turbocharger			TURBO
1	> 931 123 002 09	turbocharger		1	M31.01
2	900 081 053 00	stud M 10 X 25		2	
2A	900 081 050 02	stud M 10 X 28		4	
3	900 081 044 08	stud M 8 X 35		2	
4	930 110 156 06	cover		1	
5	931 110 056 00	cover		1	
6	930 110 149 00	gasket		2	
7	931 123 149 00	piston		1	
8	931 123 147 02	spring guide		1	
9	931 123 151 01	compression spring		1	
10	N 012 006 4	lock ring		8	
11	N 010 220 3	hexagon-head bolt M 6 X 30		8	
		- -- E N D -- -			

Model	Year	MG	SG	Illustration	Restrictions	Update		
924	79	2	98	REP		187	8:41	12.04.2005

Pos	Part Number	Name	Remarks	Qty	Model
		repair kits			
>>	> 931 123 901 00	set of seals for turbocharger without mounting parts comprising:		1	TURBO
-	900 123 106 30	sealing ring		4	
-	N 043 815 2	sealing ring		1	
-	931 110 152 01	gasket		1	
-	931 111 191 10	gasket		1	
-	944 111 205 02	gasket		1	
-	928 111 244 03	sealing ring		1	
-	900 123 008 30	sealing ring		3	
-	900 123 043 30	sealing ring		3	
-	900 123 084 30	sealing ring		1	
-	930 123 194 01	gasket		2	
-	993 111 195 00	sealing ring		2	
-	900 174 045 40	sealing ring		1	
-	999 701 473 40	round seal		1	
-	999 701 477 40	round seal		1	
-	999 707 043 40	o-ring		1	
-	999 701 621 40	o-ring		1	
>>	> 000 043 018 00	installation set comprising:		1	TURBO
		set of seals with mounting parts		1	
-	931 123 901 00	set of seals		1	
-	999 085 001 02	socket head nut		2	
-	N 900 730 01	lock nut		4	
-	931 123 197 00	shouldered bolt		3	
-	E 931 123 199 00	sleeve		3	
-	930 123 134 04	gasket		1	
-	900 074 233 02	hexagon-head bolt M 6 X 40		2	

Model	Year	MG	SG	Illustration	Restrictions	Update		
924	79	2	98	REP		187	8:41	12.04.2005

Pos	Part Number	Name	Remarks	Qty	Model
-	900 910 096 02	lock nut M 6		2	
-	N 010 020 2	hexagon-head bolt M 10 X 38		4	
-	999 084 047 02	lock nut M 10		4	
-	999 513 002 40	tie-wrap		1	
-	931 110 185 01	hose		1	
-	900 157 007 00	hexagon nut		1	
-	900 910 097 02	lock nut		4	
-	900 081 049 02	stud		4	
-	931 111 599 01	intermediate ring		1	
-	930 111 191 01	gasket		4	
-	999 084 611 02	lock nut		8	
>>	> 477 298 113	set of fastening parts for front muffler	76-	1	924
>>	> 477 298 113 A	set of fastening parts for rear muffler round	-77	1	924
>>	> 477 298 113 C	set of fastening parts for rear muffler oval	78-	1	924
>>	> 477 298 113 B	set of fastening parts for front muffler and rear muffler round	-77	1	924
>>	> 477 298 113 D	set of fastening parts for front muffler and rear muffler oval	78-	1	924
>>	> 477 298 113 E	set of fastening parts for front muffler		1	TURBO
>>	> 477 298 113 F	set of fastening parts for rear muffler		1	TURBO

Model	Year	MG	SG	Illustration	Restrictions	Update		
924	79	2	98	REP		187	8:41	12.04.2005

Pos	Part Number	Name	Remarks	Qty	Model
>>	> 477 298 113 G	set of fastening parts for front muffler and rear muffler - -- E N D -- -		1	TURBO

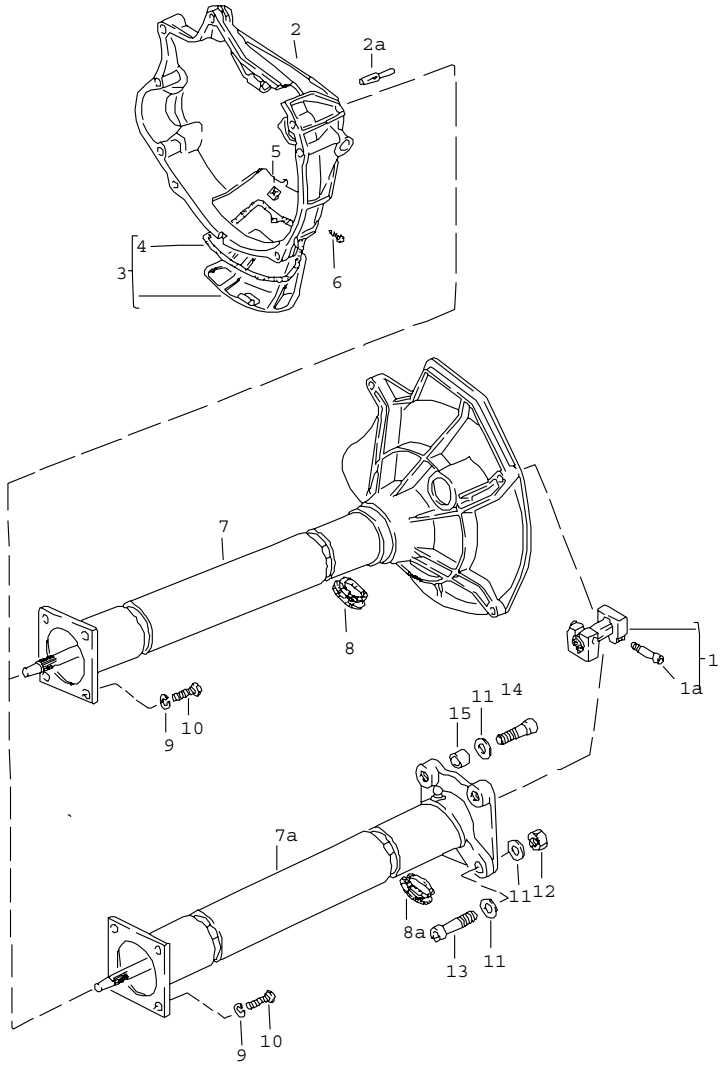

Pos	Part Number	Name	Remarks	Qty	Model
		central tube			924
1	477 521 145 A	clamping sleeve see technical information		1	
1A	477 521 501 A	pan-head screw		2	
2	477 521 211 B	clutch housing		1	
2A	N 012 690 1	grooved pin 10 X 32		3	
3	477 521 213	cover		1	
4	477 521 214	gasket		1	
5	999 591 327 02	speed nut B 6,3 X 23		1	
6	N 013 947 3	oval-head screw 6,3 X 19		1	
7	> 477 521 230 B	central tube ready for installation for 4-speed transmission use also: 477.521.277.C		1	XT YR
7A	E 477 521 230 A	central tube ready for installation for 5-speed transmission		1	VA VB
8	477 521 277 A	cap		1	XT YR
(8)	477 521 277 C	cap		X	XT YR
8A	477 521 278	cap		1	VR VB
9	900 027 016 02	lock ring		4	
10	N 010 275 4	hexagon-head bolt M 10 X 35		4	
11	N 011 564 2	washer		6	
12	N 011 020 8	hexagon nut M 12 X 1,5		2	
13	N 044 757 1	pan-head screw M 12 X 1,5 X 55		2	
14	E N 044 738 1	pan-head screw M 12 X 1,5 X 40		2	

Pos	Part Number	Name	Remarks	Qty	Model	Pos	Part Number	Name	Remarks	Qty	Model
15	019 301 153	dowel sleeve		2							
		- -- E N D -- -									

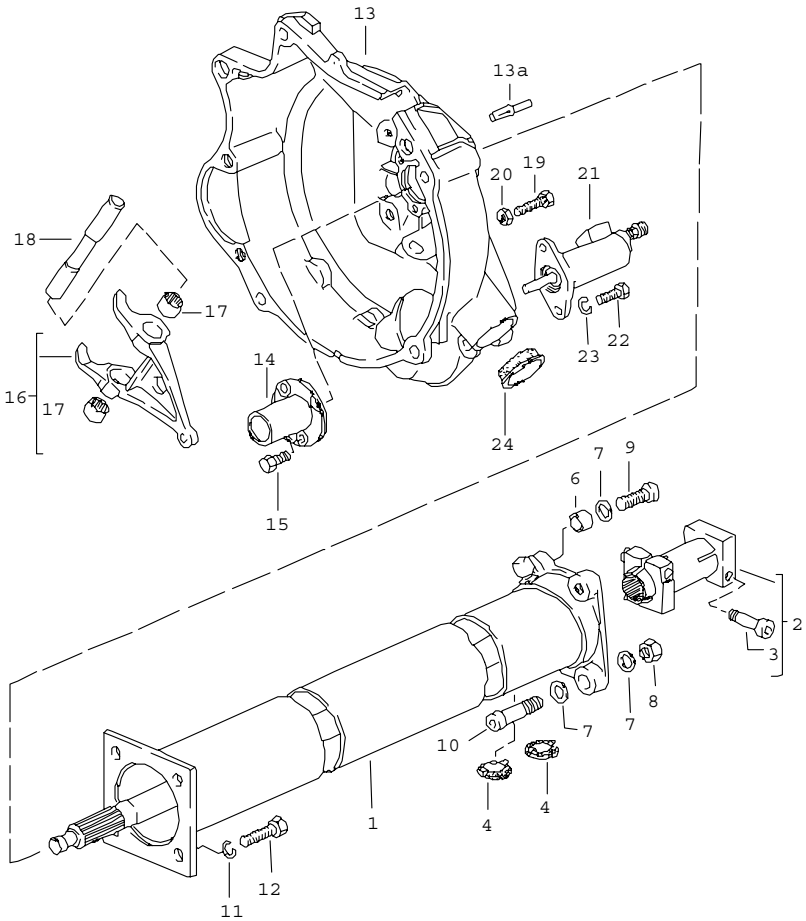

Pos	Part Number	Name	Remarks	Qty	Model
		central tube			TURBO
1	> 931 421 012 01	central tube ready for installation		1	
2	922 421 051 02	clamping sleeve		1	
3	931 421 240 00	clamping screw		2	
4	477 521 278	cap		2	
6	019 301 153	dowel sleeve		2	
7	N 011 564 2	washer		6	
8	N 011 020 8	hexagon nut M 12 X 1,5		2	
9	E N 044 738 1	pan-head screw M 12 X 1,5 X 40		2	
10	N 044 757 1	pan-head screw M 12 X 1,5 X 55		2	
11	900 027 016 02	lock ring		4	
12	N 010 275 4	hexagon-head bolt M 10 X 35		4	
13	931 116 043 02	clutch housing		1	
13A	N 012 690 1	grooved pin 10 X 32		3	
14	016 141 181	guide sleeve		1	
15	N 090 194 2	hexagon-head bolt M 7 X 16		3	
16	931 116 085 00	clutch release lever		1	
17	999 201 213 00	needle sleeve		2	
18	951 116 133 00	operating shaft		1	
19	N 010 221 3	hexagon-head bolt M 6 X 35		1	
20	900 076 010 02	hexagon nut		1	
21	944 116 237 00	clutch operating cylinder		1	
-	* 928 116 901 00	repair kit clutch operating cylinder		1	
22	N 010 233 6	hexagon-head bolt M 8 X 28		2	

Model	Year	MG	SG	Illustration	Restrictions	Update			
924	79	3	01	301-05		187	10:55	06.04.2005	PORSCHE PET PORSCHE

Pos	Part Number	Name	Remarks	Qty	Model	Pos	Part Number	Name	Remarks	Qty	Model
23	N 012 038 1	lock ring		2							
24	931 116 177 00	cap		1							
		- -- E N D -- -									

Model	Year	MG	SG	Illustration	Restrictions	Update			
924	79	3	01	301-10		187	10:55	06.04.2005	PORSCHE PET PORSCHE

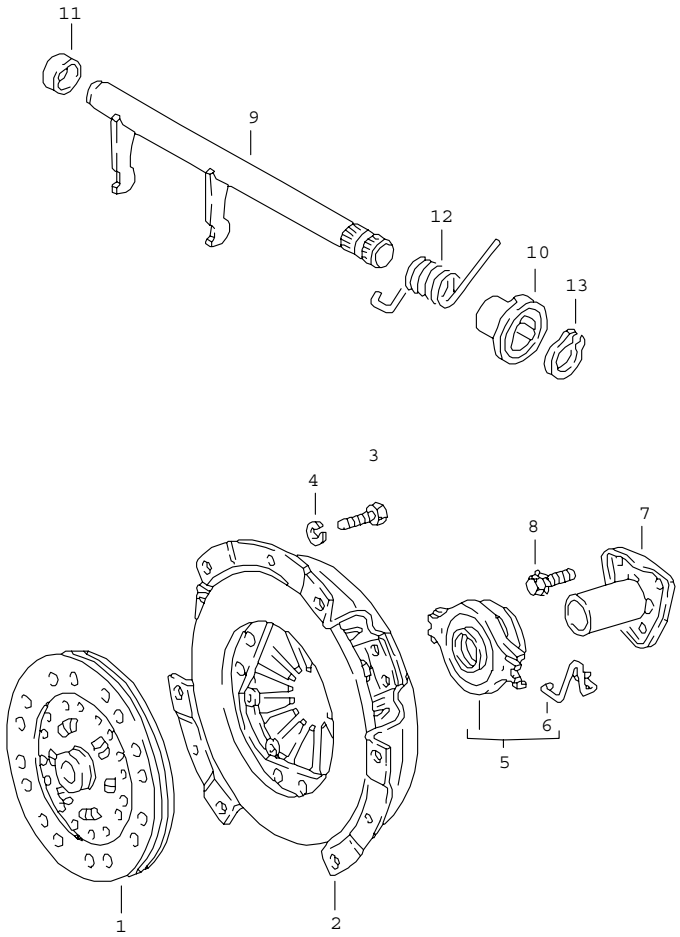

Pos	Part Number	Name	Remarks	Qty	Model
		clutch			924
1	047 141 031 C	drive plate		1	
1	047 141 031 C	drive plate without asbestos		1	
2	> 035 141 117 E	clutch pressure plate		1	
3	N 010 240 7	hexagon-head bolt M 8 X 20		6	
4	900 027 015 02	lock ring		6	
5	113 141 165 B	clutch release bearing		1	
6	113 141 177 C	spring	/L	1	
(6)	113 141 178 C	spring	/R	1	
7	016 141 181	guide sleeve		1	
8	N 090 194 2	hexagon-head bolt M 7 X 16		3	
9	E 088 141 701	operating shaft		1	
10	E 092 141 699	bush		1	
11	088 141 713 B	bush		1	
12	088 141 723	torsion spring		1	
13	N 012 640 1	circlip		1	
--	924 116 911 00	repair kit for clutch	79	1	
		- -- E N D -- -			

Model	Year	MG	SG	Illustration	Restrictions	Update			
924	79	3	01	301-15		187	10:55	06.04.2005	PORSCHE PET PORSCHE

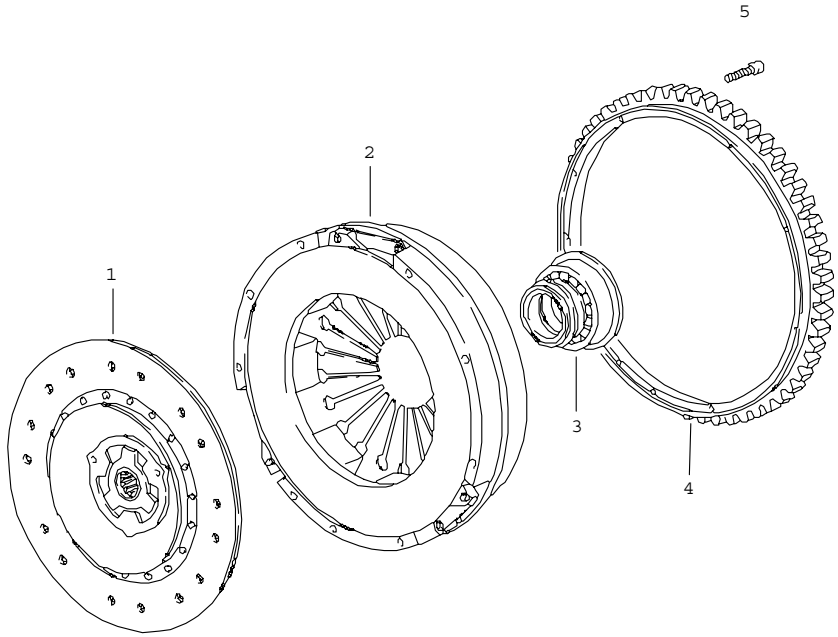

Pos	Part Number	Name	Remarks	Qty	Model
		clutch			TURBO
1	> 931 116 011 04	clutch plate without asbestos		1	
2	> 931 116 001 02	pressure plate		1	
3	931 116 082 04	clutch release bearing		1	
4	944 116 239 03	starter ring		1	
5	900 067 020 02	pan-head screw M 8 X 50		9	
		- -- E N D -- -			

Model	Year	MG	SG	Illustration	Restrictions	Update			
924	79	3	02	302-00		187	10:55	06.04.2005	PORSCHE PET PORSCHE

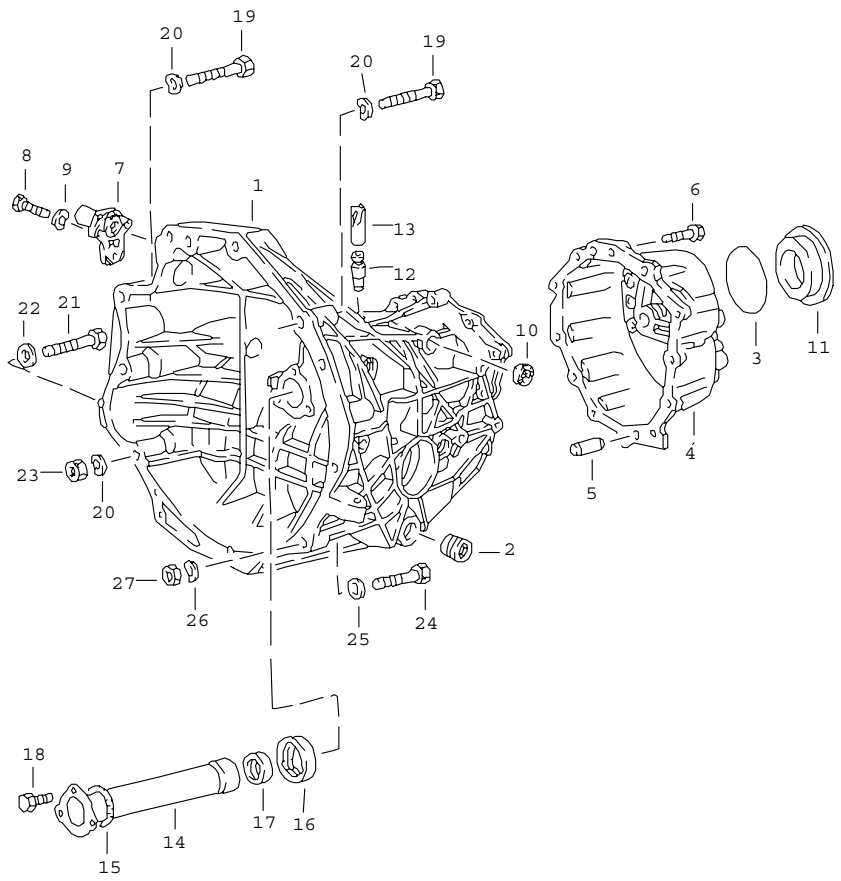

Pos	Part Number	Name	Remarks	Qty	Model
		replacement transmission transmission case 4-speed			924
-	E 088 300 043 J	replacement transmission		1	YR
1	E 088 301 103 C	transmission case		1	
2	111 301 127 E	screw plug M 24 X 1,5		1	
3	* 088 301 185	sealing ring		1	
4	088 301 211 C	end plate G >> YR 20 02 9		1	YR XT
(4)	E 088 301 211 G	end plate G YR 21 02 9 >>		1	YR XT
5	014 301 473	guide sleeve 12 M 6 X 28		2	
6	N 010 332 4	hexagon-head bolt M 8 X 32		12	
7	088 301 453	cover		1	
8	900 075 193 08	hexagon-head bolt M 6 X 16		3	
9	N 012 226 5	spring washer		3	
10	* 928 303 120 01	shaft seal		1	
11	088 301 467 B	cover		1	
12	E 088 301 473	breather pipe		1	
13	003 507 145 A	cap		1	
14	088 301 687 A	protective tube		1	
15	088 301 699 A	sealing ring		1	
16	E 088 301 697 B	centring ring		1	
17	999 113 275 40	shaft seal		1	
18	N 090 194 2	hexagon-head bolt M 7 X 16		3	
19	N 010 183 1	hexagon-head bolt M 12 X 75		2	
20	900 028 014 02	spring washer		3	
21	N 010 185 3	hexagon-head bolt M 12 X 80		1	

Pos	Part Number	Name	Remarks	Qty	Model	Pos	Part Number	Name	Remarks	Qty	Model
22	N 011 531 7	washer		1							
23	N 011 020 8	hexagon nut		1							
24	N 010 460 2	hexagon-head bolt M 10 X 60		1							
25	N 011 527 2	washer		1							
26	N 012 230 6	spring washer		1							
27	N 011 010 6	hexagon nut		1							
		back-up light switch see group 9/06/00									
		- -- E N D -- -									

Model	Year	MG	SG	Illustration	Restrictions	Update				
924	79	3	02	302-05		187	10:56	06.04.2005	PORSCHE	PET	PORSCHE

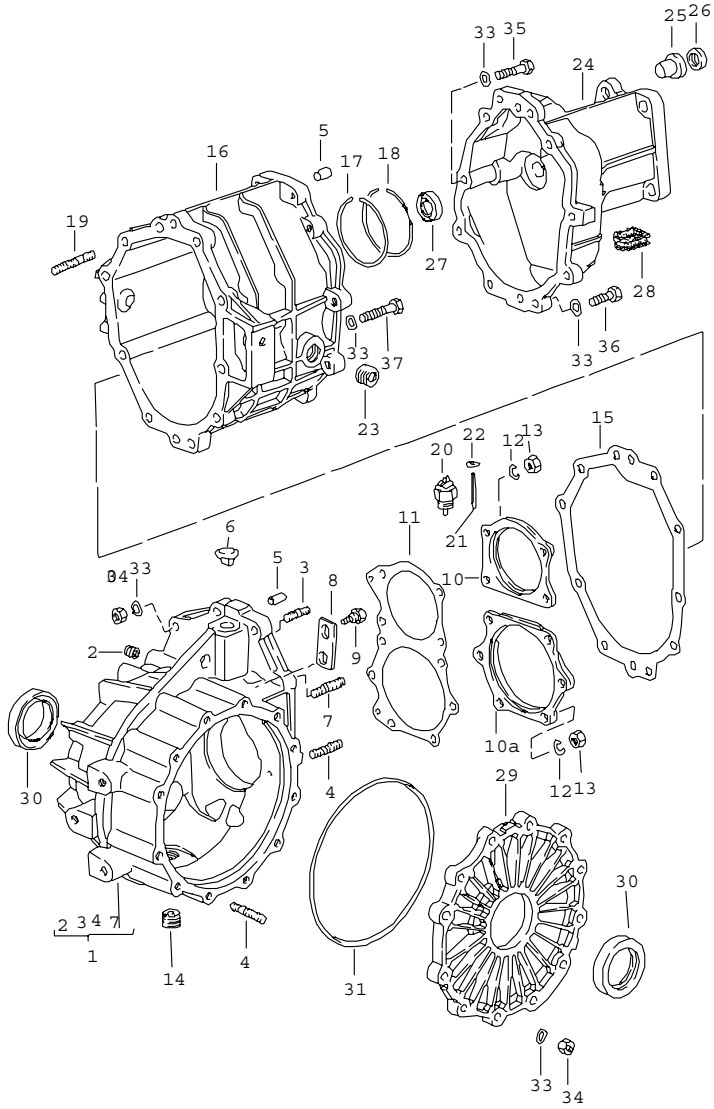

Pos	Part Number	Name	Remarks	Qty	Model
		replacement transmission transmission case 5-speed			
-	E 477 300 010	replacement transmission ready for installation		1	VA
-	E 477 300 010 B	replacement transmission with limited-slip differential ready for installation		1	VA
-	> 931 300 010 00	replacement transmission ready for installation		1	G31.01
-	E 931 300 010 02	replacement transmission with limited-slip differential ready for installation		1	G31.01
1	E 477 301 901 A	rear axle housing		1	VA VB
(1)	931 301 901 02	rear axle housing		1	G31.01
2	999 504 047 00	threaded insert M 10 X 10		2	
3	999 062 006 02	stud BM 8 X 20		6	VA VB
(3)	N 014 532 4	stud BM 8 X 16		4	G31.01
4	999 062 008 02	stud BM 8 X 25		16	VA VB
(4)	999 062 008 02	stud BM 8 X 25		12	G31.01
5	900 012 110 00	straight pin M 6 X 14		4	
6	928 301 311 01	bleeder		1	
7	999 062 009 02	stud BM 8 X 28		2	
8	477 303 132 A	locking piece		1	
9	477 303 133 A	hexagon-head bolt for locking piece		2	
(10)	930 302 121 00	tensioning plate		1	VA VB
10	915 302 121 03	tensioning plate		1	G31.01
10A	931 302 123 01	tensioning plate		1	G31.01

Pos	Part Number	Name	Remarks	Qty	Model
11	915 302 268 03	adjusting shim 0,10 MM		X	
(11)	915 302 268 04	adjusting shim 0,15 MM		X	
(11)	915 302 268 05	adjusting shim 0,20 MM		X	
12	900 027 015 02	lock ring		10	
13	900 076 025 02	hexagon nut		10	
14	E 113 301 141 B	magnetic plug		1	
15	* 477 301 191 A	gasket		1	
16	E 477 301 902	gear housing		1	VA VB
(16)	931 301 902 00	gear housing		1	G31.01
17	900 111 001 00	snap ring		2	
18	999 152 031 01	snap ring		2	
19	E 999 062 098 02	stud BM 8 X 38		1	
20	084 941 521	switch --10/78		1	
(20)	084 941 521	back-up light switch 11/78--		1	
21	931 303 175 00	pin		1	
22	999 041 503 01	locking ring		1	
23	111 301 127 E	screw plug M 24 X 1,5		1	
24	477 301 301 C	transmission cover front		1	VA VB
(24)	931 301 301 00	transmission cover front		1	G31.01
25	E 001 301 209	guide bush		1	
26	* 001 301 227	radial shaft seal 15 X 24 X 7		1	
27	* 014 311 113 B	radial shaft seal		1	VA VB
(27)	* 999 113 247 40	radial shaft seal		1	G31.01
28	928 301 171 00	cap		1	
29	E 915 301 311 06	transmission cover		1	
30	* 999 113 183 40	radial shaft seal 45 X 68 X 10		2	
31	* 999 701 392 40	o-ring		1	
33	N 012 241 8	spring washer		X	
34	900 076 025 02	hexagon nut		X	
35	900 074 134 02	hexagon-head bolt M 8 X 45		1	
36	900 075 099 02	hexagon-head bolt M 8 X 30		9	
37	900 074 139 02	hexagon-head bolt M 8 X 55		1	
		- -- E N D -- -			

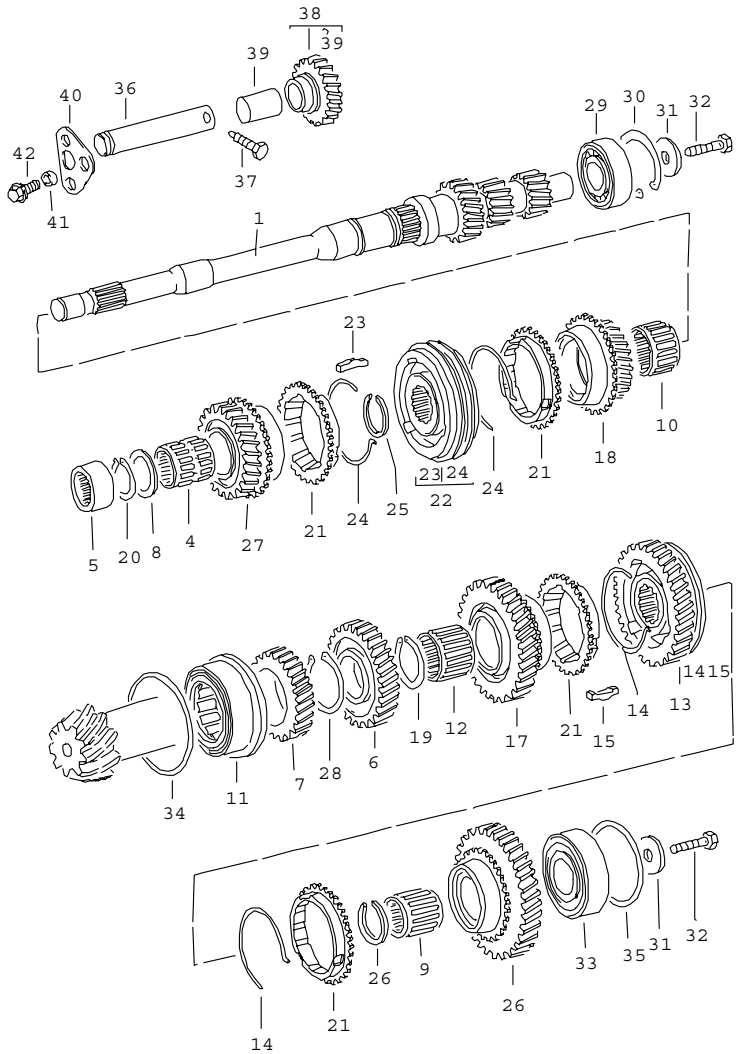

Pos	Part Number	Name	Remarks	Qty	Model
		gears and shafts 4-speed			924
1	088 311 105 AD	drive shaft		1	
4	016 311 115	needle-roller bearing 4th speed		1	
5	088 311 123	needle sleeve		1	
6	E 088 311 131 A	3rd speed		1	
7	E 088 311 149	4th speed		1	
8	088 311 155 A	thrust washer		1	
9	088 311 207	1st gear		1	
10	088 311 213	3rd speed		1	
11	088 311 220	bearing		1	
12	088 311 229 B	needle-roller bearing 2nd gear		1	
13	088 311 239 A	synchroniser ring 1st/2nd gear with operating sleeve		1	
14	088 311 311 D	spring 1st/2nd gear		2	
15	088 311 313	detent		3	
16	088 311 257 A	shifting gear 1st gear		1	
17	088 311 271 A	shifting gear 2nd gear		1	
18	088 311 285 A	shifting gear 3rd speed		1	
19	088 311 287	circlip 1,65		1	
(19)	088 311 287 A	circlip 1,70		X	
(19)	088 311 287 B	circlip 1,75		X	
20	088 311 287	circlip 1,65		1	
(20)	088 311 287 B	circlip 1,75		X	

Pos	Part Number	Name	Remarks	Qty	Model
(20)	016 311 344	circlip		1	
21	088 311 295 B	synchroniser ring 1st gear 2nd gear 3rd speed 4th speed with operating sleeve		4	
22	088 311 301 B	synchronising hub 3rd, 4th speed with operating sleeve		1	
23	088 311 245	detent		3	
24	088 311 311 B	spring 3rd, 4th speed		2	
25	088 311 317	circlip 1,50		1	
(25)	088 311 317 B	circlip 1,56		X	
(25)	088 311 317 C	circlip 1,62		X	
26	E 088 311 327	circlip 1,50		1	
(26)	E 088 311 327 A	circlip 1,55		X	
(26)	088 311 327 B	circlip 1,60		X	
27	088 311 351 A	shifting gear 4th speed		1	
		circlip G >> YR 03 06 6			
28	E 088 311 363	circlip 1,59		1	
(28)	E 088 311 363 A	circlip 1,61		X	
(28)	E 088 311 363 B	circlip 1,63		X	
(28)	E 088 311 363 C	circlip 1,65		X	
(28)	E 088 311 363 D	circlip 1,67		X	
(28)	E 088 311 363 E	circlip 1,69		X	
(28)	E 088 311 363 F	circlip 1,71		X	
(28)	E 088 311 363 G	circlip 1,73		X	
(28)	088 311 363 H	circlip 1,75		X	
		circlip G YR 04 06 6 >>			
28	E 088 311 363 AA	circlip 2,34		1	
(28)	E 088 311 363 AC	circlip 2,36		X	
(28)	E 088 311 363 AE	circlip 2,38		X	
(28)	E 088 311 363 AG	circlip 2,40		X	
(28)	E 088 311 363 AJ	circlip 2,42		X	
(28)	E 088 311 363 AL	circlip 2,44		X	
(28)	088 311 363 AN	circlip 2,46		X	
(28)	E 088 311 363 AQ	circlip 2,48		X	
(28)	088 311 363 AS	circlip 2,50		X	
29	088 311 371 E	deep-groove ball bearing		1	
30	E N 012 292 2	circlip 68 X 2,5		1	
31	E N 900 913 01	washer		2	
32	N 010 239 11	hexagon-head bolt M 8 X 18		2	
33	088 311 375	taper roller bearing		1	
34	088 311 391	shim 0,20		1	

Pos	Part Number	Name	Remarks	Qty	Model
(34)	088 311 391 A	shim 0,25		X	
(34)	088 311 391 B	shim 0,30		X	
(34)	088 311 391 C	shim 0,35		X	
(34)	088 311 391 D	shim 0,40		X	
(34)	088 311 391 E	shim 0,65		X	
(34)	088 311 391 F	shim 0,90		X	
(34)	088 311 391 G	shim 1,15		X	
35	088 311 393	shim 0,24		1	
(35)	088 311 393 A	shim 0,27		X	
(35)	088 311 393 B	shim 0,30		X	
(35)	088 311 393 C	shim 0,33		X	
(35)	088 311 393 D	shim 0,36		X	
(35)	088 311 393 E	shim 0,39		X	
(35)	E 088 311 393 F	shim 0,42		X	
(35)	088 311 393 G	shim 0,45		X	
(35)	088 311 393 H	shim 0,69		X	
(35)	088 311 393 J	shim 0,93		X	
(35)	088 311 393 K	shim 1,17		X	
(35)	088 311 393 L	shim 1,41		X	
36	E 088 311 519 A	axle G >> YR 20 02 9		1	
(36)	E 016 311 519 A	axle G YR 21 02 9 >>		1	
37	E 088 311 527 A	hexagon-head bolt G >> YR 20 02 9		1	
38	088 311 529	reverse idler gear G >> YR 20 02 9		1	
(38)	016 311 529 D	reverse idler gear G YR 21 02 9 >>		1	
39	088 311 533	bush		1	
40	E 016 311 853 A	retainer plate G YR 21 02 9 >>		1	
41	088 301 291 A	shouldered bolt G YR 21 02 9 >>		1	
42	088 301 291 A	shouldered bolt M 8 X 16 G YR 21 02 9 >>		1	
		- -- E N D -- -			

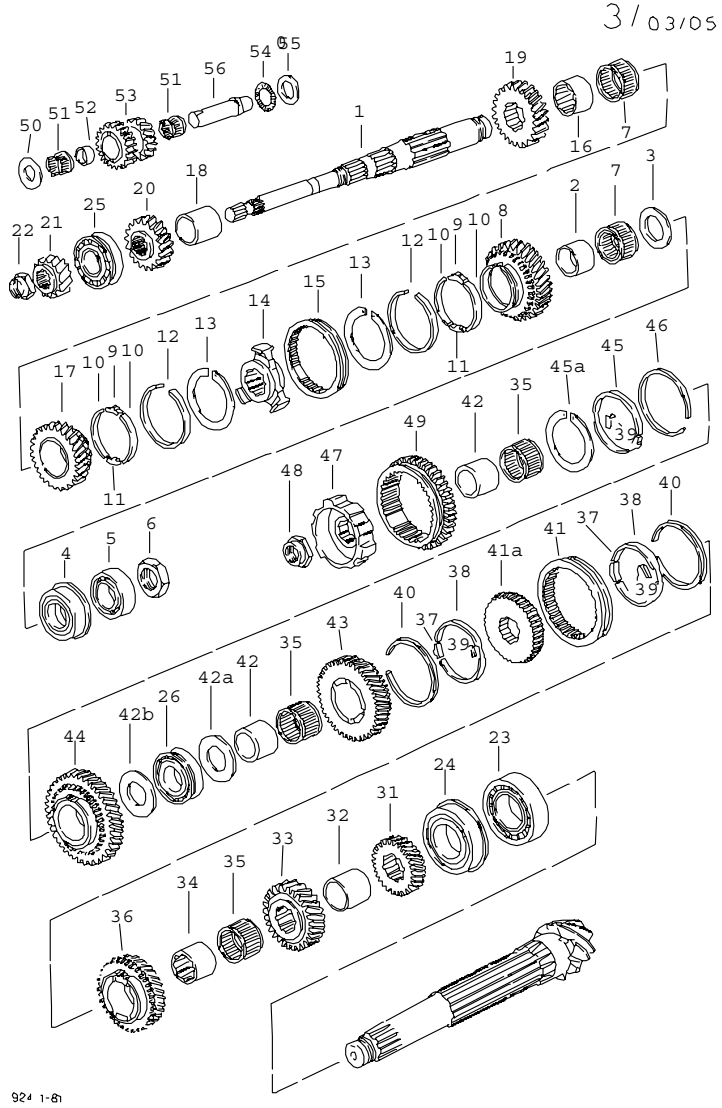

Pos	Part Number	Name	Remarks	Qty	Model
		gears and shafts 5-speed			
		transmission gear sets 016 Z			VA
-	E 477 302 901 A	gear set see technical information GR. 3 NR. 6 1st gear reverse gear Z = 14:39 comprising: loose gear wheel fixed gear wheel reverse idler gear		1	
-	E 477 302 902	gear set 2nd gear Z = 18:31 comprising: loose gear wheel fixed gear wheel		1	
-	477 302 903	gear set 3rd speed Z = 23:28 comprising: loose gear wheel fixed gear wheel		1	
-	477 302 904	gear set 4th speed Z = 29:27 comprising: loose gear wheel fixed gear wheel		1	
-	477 302 905 A	gear set 5th speed Z = 34:24 comprising: loose gear wheel fixed gear wheel		1	
-	477 302 911 A	ring gear and pinion shaft 7:33 comprising: drive shaft crown wheel		1	
		transmission gear sets G 31.01			TURBO

Pos	Part Number	Name	Remarks	Qty	Model
-	931 302 901 02	gear set 1st gear reverse gear Z = 12:38 comprising: drive shaft loose gear wheel reverse idler gear		1	
-	931 302 902 02	gear set 2nd gear Z = 18:32 comprising: loose gear wheel fixed gear wheel		1	
-	477 302 903	gear set 3rd speed Z = 23:28 comprising: loose gear wheel fixed gear wheel		1	
-	477 302 904	gear set 4th speed Z = 29:27 comprising: loose gear wheel fixed gear wheel		1	
-	477 302 905 A	gear set 5th speed Z = 34:24 comprising: loose gear wheel fixed gear wheel		1	
-	931 302 911 01	ring gear and pinion shaft 8:33 comprising: drive shaft crown wheel		1	
1	E 477 302 101 B	drive shaft		1	VA VB
(1)	-	drive shaft		1	G31.01
2	915 302 261 00	bush 5th speed		1	
3	930 302 291 00	thrust washer		1	
4	999 052 030 00	four-point bearing		1	
5	930 302 391 00	cylindrical-roller bearing		1	
6	930 302 281 00	collar nut M 30 X 1,5		1	
7	999 201 470 00	needle cage		2	
8	-	loose gear wheel 5th speed		1	
9	911 302 315 00	stone		2	
10	911 302 316 00	brake band		4	
11	911 302 317 12	stop		2	
12	911 302 301 08	synchroniser ring		2	
13	911 302 311 01	circlip		2	
14	911 302 402 20	guide sleeve		1	
15	911 302 411 20	shift sleeve		1	
16	E 915 302 262 00	bush 4th speed		1	
17	-	loose gear wheel 4th speed		1	
18	E 477 302 267	spacer sleeve		1	VA VB
(18)	477 302 266	spacer sleeve		1	G31.01
19	-	fixed gear wheel 3rd speed		1	
20	-	fixed gear wheel 2nd gear		1	
21	-	fixed gear wheel 1st gear		1	VA VB
22	477 302 280	collar nut M 22 X 1,5		1	VA VB
23	999 110 146 00	cylindrical-roller bearing		1	
24	917 301 391 00	four-point bearing		1	VA,VB
(24)	999 052 053 00	four-point bearing		1	G31.01
25	999 110 084 00	cylindrical-roller bearing		1	VA VB
(25)	999 110 091 00	cylindrical-roller bearing		1	G31.01
26	999 110 076 00	cylindrical-roller bearing		1	
31	-	fixed gear wheel 5th speed		1	
32	477 302 266	spacer sleeve		1	

Pos	Part Number	Name	Remarks	Qty	Model
33	-	fixed gear wheel 4th speed		1	
34	477 302 263	bush 3rd speed		1	
35	E 477 302 298	needle cage		3	
36	-	loose gear wheel 3rd speed		1	
37	915 302 315 01	stone		3	
38	928 302 318 01	double barricade tape		2	
39	928 302 321 00	stop		3	
40	E 928 302 301 30	synchroniser ring		2	VA VB
(40)	931 302 301 01	synchroniser ring		2	G31.01
41	928 302 413 08	shift sleeve		1	
41A	477 302 402	guide sleeve 2nd/3rd gear		1	
42	477 302 261	bush 1st/2nd gear		2	
42A	477 302 291	thrust washer		2	VA VB
42A	477 302 291	thrust washer		1	G31.01
42B	931 302 291 00	thrust washer		1	G31.01
43	-	loose gear wheel 2nd gear		1	
44	-	loose gear wheel 1st gear		1	
45	928 302 319 05	double barricade tape		1	
45A	915 302 311 01	circlip		1	
46	931 302 301 02	synchroniser ring		1	
47	931 302 401 00	guide sleeve 1st gear reverse gear		1	
48	915 302 282 00	collar nut M 24 X 1,5		1	
49	477 302 227 B	shifting gear 1st gear reverse gear		1	VA VB
(49)	931 302 227 00	shifting gear 1st gear shifting gear		1	G31.01
50	915 302 229 01	thrust washer		1	
51	999 201 141 00	needle cage		2	
52	477 302 231	intermediate ring		1	VA VB
(52)	931 302 231 00	intermediate ring		1	G31.01
53	-	reverse idler gear		1	
54	999 202 001 00	axial needle bearing cage		1	
55	999 201 707 00	washer		1	
56	E 477 302 233	bolt		1	VA VB
(56)	931 302 233 00	bolt		1	G31.01

- -- E N D -- -

Model	Year	MG	SG	Illustration	Restrictions	Update	10:56	06.04.2005	PORSCHE PET PORSCHE
924	79	3	04	304-00		187			

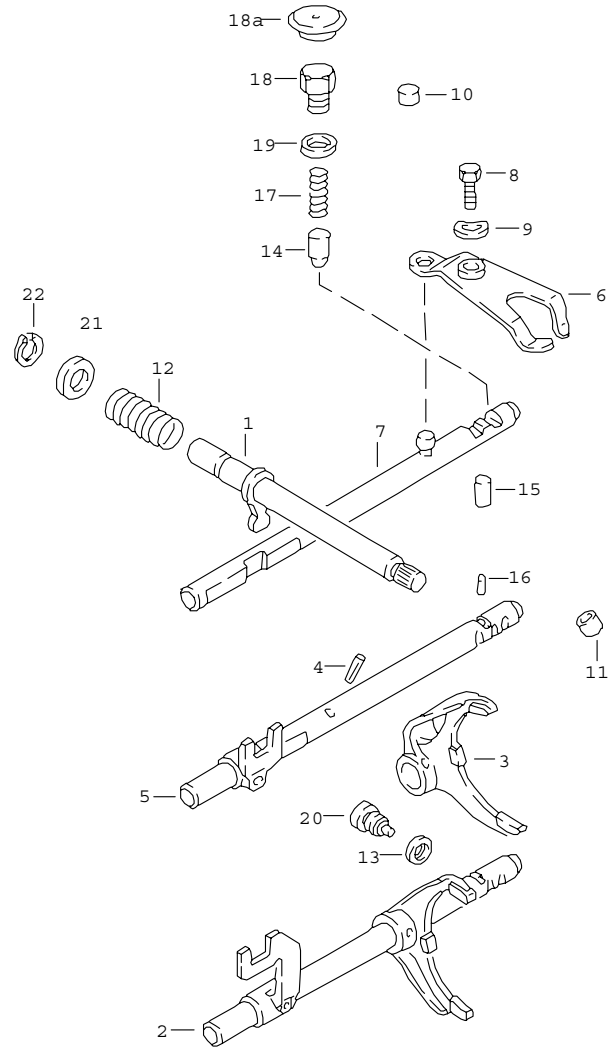

Pos	Part Number	Name	Remarks	Qty	Model
		transmission control 4-speed			924
1	088 311 541	shift rod		1	
2	E 088 311 549 A	shift fork 1st/2nd gear		1	
3	088 311 561 B	shift fork 3rd, 4th speed		1	
4	N 900 073 01	tensioning sleeve 6 X 22		1	
5	E 088 311 565 A	selector shaft 3rd, 4th speed		1	
6	E 088 311 573	reverse lever G >> YR 20 02 9		1	
(6)	016 311 573 B	reverse lever G YR 21 02 9 >>		1	
7	E 088 311 575 A	selector shaft reverse gear G >> YR 20 02 9		1	
(7)	088 311 575 E	selector shaft reverse gear G YR 21 02 9 >>		1	
8	084 311 589 B	pan-head screw M 10 X 32		1	
9	N 012 230 6	spring washer		1	
10	E N 011 912 1	cover		1	
11	019 301 115	plug		1	
12	088 311 645 C	spring		1	
13	* 088 311 599	sealing ring		2	
14	084 311 621 D	bush		3	
15	014 311 629	detent		2	
16	014 311 635	intermediate piece		1	
17	014 311 641 A	compression spring		3	
18	088 311 689 B	threaded bush		1	
18A	088 311 707	cap		1	
19	900 123 140 30	sealing ring		1	

Pos	Part Number	Name	Remarks	Qty	Model	Pos	Part Number	Name	Remarks	Qty	Model
20	088 311 721	stop screw		2							
21	088 311 723	washer		1							
22	N 012 416 1	circlip 16 X 1		1							
		- -- E N D -- -									

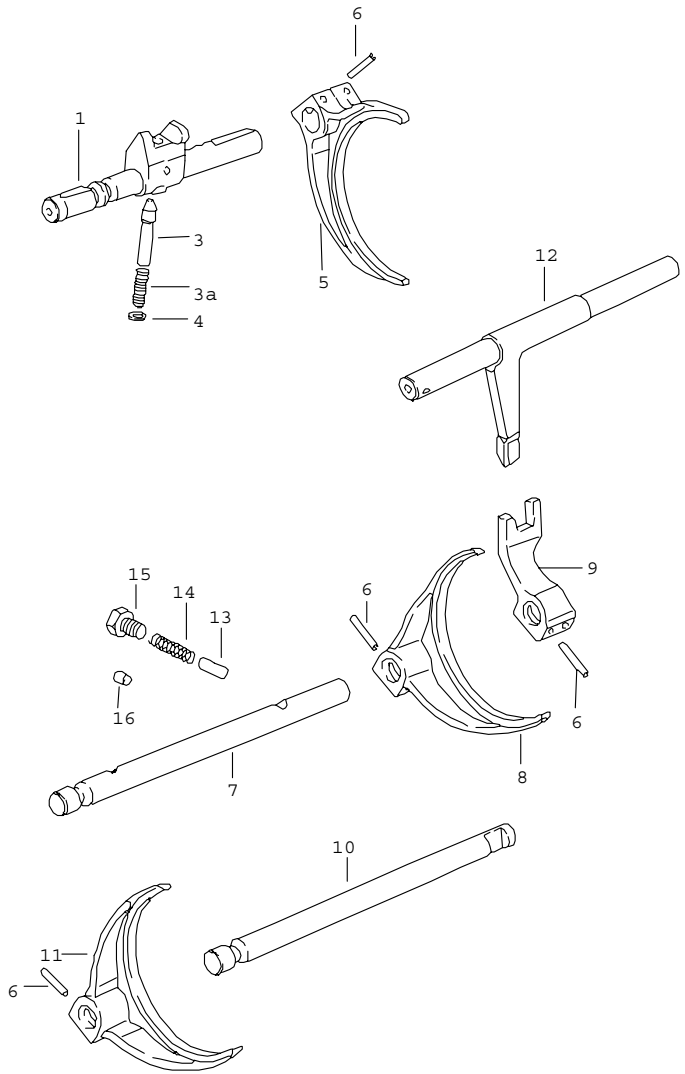

Pos	Part Number	Name	Remarks	Qty	Model
		transmission control 5-speed			
1	477 303 102 A	gear shift rod 1st gear reverse gear		1	VA VB
1	931 303 102 01	gear shift rod		1	G31.01
3	477 303 230 C	locking bolt		1	
3A	477 303 234 C	spring		1	
4	477 303 235	washer		1	
5	E 477 303 111	shift fork 1st gear reverse gear		1	VA VB
(5)	931 303 111 00	shift fork 1st gear reverse gear		1	G31.01
6	N 013 317 1	roll pin 5 X 28		6	
7	477 303 103 A	gear shift rod 2nd/3rd gear		1	
8	E 477 303 112	shift fork 2nd/3rd gear		1	
9	477 303 115	contact 2nd/3rd gear		1	
10	477 303 104 A	gear shift rod 4. / 5. GANG		1	
11	477 303 114	shift fork 4. / 5. GANG		1	
12	E 477 303 101	inner shift rod		1	
13	931 303 131 00	detent		4	
14	477 303 236	spring		3	
15	900 075 352 02	hexagon-head bolt M 10 X 8		3	
16	901 105 379 00	plug		1	
		- -- E N D -- -			

Model	Year	MG	SG	Illustration	Restrictions	Update	10:57	06.04.2005	PORSCHE	PET	PORSCHE
924	79	3	05	305-00		187					

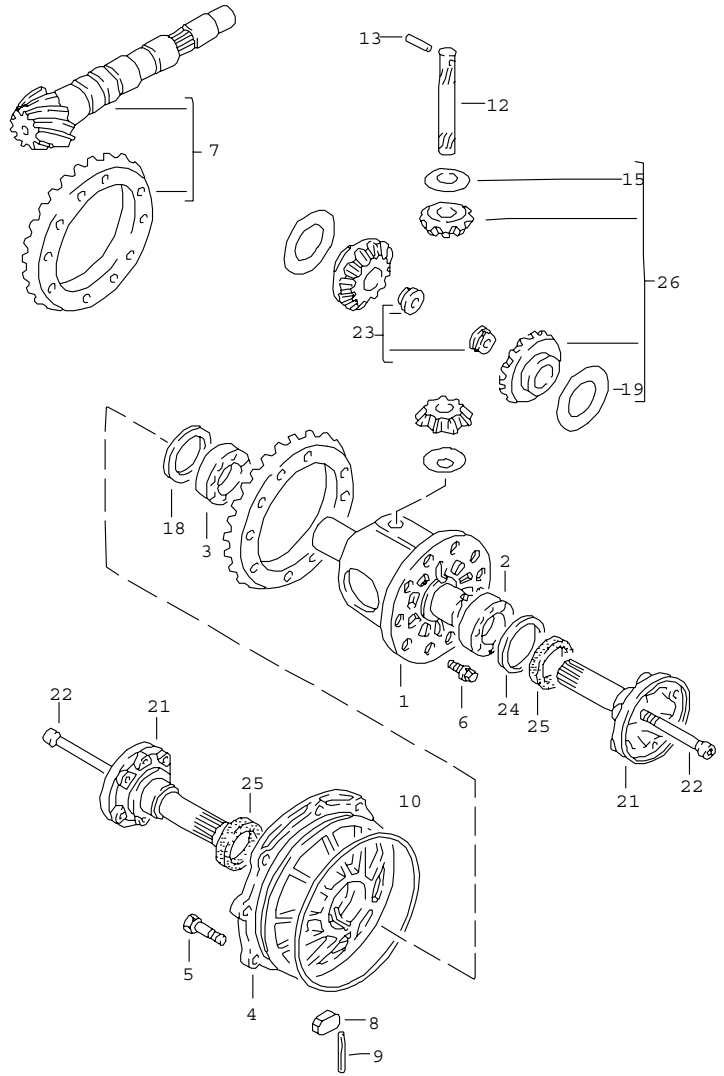

Pos	Part Number	Name	Remarks	Qty	Model
		differential 4-speed			924
1	088 409 121 B	differential housing		1	
2	016 409 123	taper roller bearing	/L	1	
3	113 517 185 C	taper roller bearing	/R	1	
4	088 409 131 C	cover		1	
5	N 090 191 1	hexagon-head bolt M 8 X 35		9	
6	088 409 135 A	hexagon-head bolt M 10 X 18		10	
7	E 088 409 143 T	ring gear and pinion shaft 9:31		1	YR
8	084 301 143 A	magnet		1	
9	E N 013 344 2	tensioning sleeve		1	
10	* 113 301 185 A	sealing ring		1	
12	005 409 177	bolt		1	
13	N 013 291 1	tensioning sleeve		1	
15	* 016 409 170	thrust washer		2	
18	113 517 201 A	shim 0,15	/R	1	
(18)	113 517 202 A	shim 0,20	/R	X	
(18)	113 517 203 A	shim 0,30	/R	X	
(18)	113 517 204 A	shim 0,40	/R	X	
(18)	113 517 205 A	shim 0,50	/R	X	
(18)	113 517 206 A	shim 0,60	/R	X	
(18)	02A 409 210 A	shim 0,70	/R	X	
(18)	02A 409 210 C	shim 0,80	/R	X	
(18)	02A 409 210 E	shim 0,90	/R	X	

Pos	Part Number	Name	Remarks	Qty	Model	Pos	Part Number	Name	Remarks	Qty	Model
(18)	02A 409 210 G	shim 1,00	/R	X							
(18)	113 517 211 A	shim 1,20	/R	X							
19	* 011 519 215	thrust washer 0,50 MM		2							
(19)	088 409 249	thrust washer 0,60 MM		X							
(19)	088 409 249 A	thrust washer 0,70 MM		X							
(19)	088 409 249 B	thrust washer 0,80 MM		X							
21	088 409 355 C	flanged shaft		2							
22	088 409 359	screw		2							
23	016 409 161	nut		2							
24	018 409 381	shim 0,15	/L	1							
(24)	018 409 383	shim 0,20	/L	X							
(24)	018 409 385	shim 0,25	/L	X							
(24)	018 409 387	shim 0,50	/L	X							
(24)	018 409 389	shim 0,80	/L	X							
(24)	018 409 391	shim 1,00	/L	X							
(24)	018 409 393	shim 1,50	/L	X							
25	* 016 409 399 B	radial shaft seal		2							
26	* 090 598 081	repair kit for differential		1							
		- -- E N D -- -									

Model	Year	MG	SG	Illustration	Restrictions	Update				
924	79	3	05	305-05		187	10:57	06.04.2005	PORSCHE	PET	PORSCHE

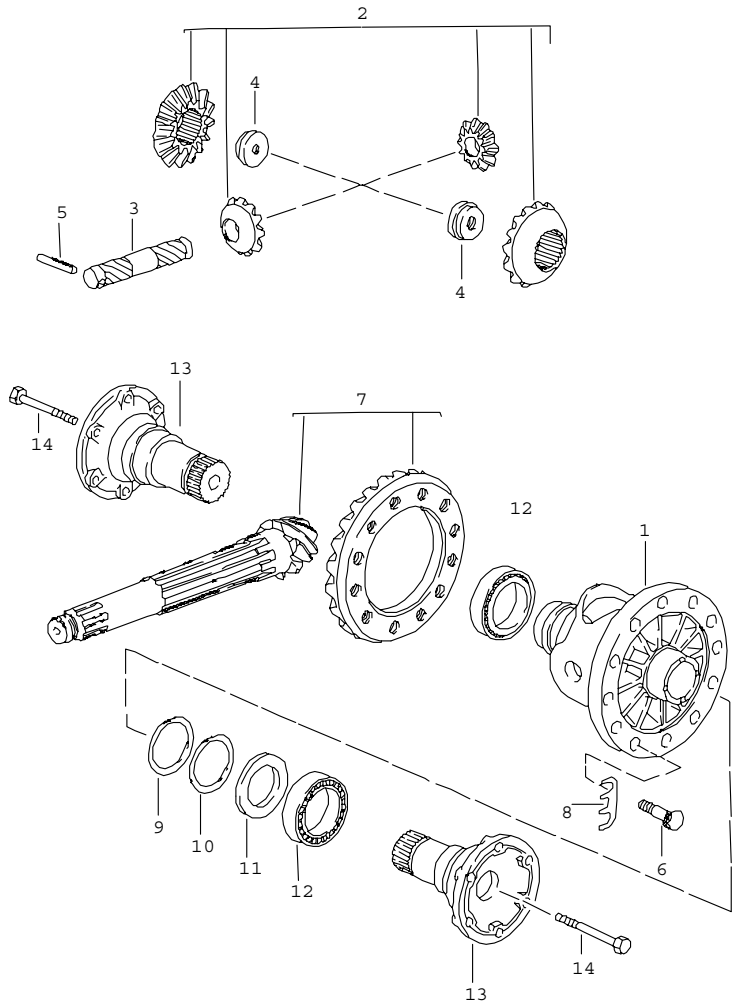

Pos	Part Number	Name	Remarks	Qty	Model
		differential 5-speed			
1	930 332 212 01	differential housing $ 21 MM		1	
2	* 928 332 902 00	differential pinions 1 set $ 18 MM		1	
2	* 928 332 902 01	differential pinions 1 set $ 21 MM		1	
3	005 409 177 00	differential bolt $ 18 MM		1	
3	928 332 207 05	differential bolt $ 21 MM		1	
4	928 332 279 02	nut for $ 21 MM		2	
5	900 309 035 00	roll pin 5 X 40		1	
6	928 332 276 03	hexagon-head bolt		12	
7	* 477 302 911 A	ring gear and pinion shaft		1	VA
(7)	* 931 302 911 01	ring gear and pinion shaft 8:33		1	G31.01
8	901 332 285 01	tab washer		6	
9	915 332 265 00	adjusting ring 2,40 MM		2	
(9)	915 332 265 01	adjusting ring 2,50 MM		X	
(9)	915 332 265 02	adjusting ring 2,60 MM		X	
(9)	915 332 265 03	adjusting ring 2,70 MM		X	
(9)	915 332 265 04	adjusting ring 2,80 MM		X	
(9)	915 332 265 05	adjusting ring 2,90 MM		X	
(9)	915 332 265 06	adjusting ring 3,00 MM		X	

Pos	Part Number	Name	Remarks	Qty	Model
(9)	915 332 265 07	adjusting ring 3,10 MM		X	
(9)	915 332 265 08	adjusting ring 3,20 MM		X	
(9)	915 332 265 09	adjusting ring 3,30 MM		X	
(9)	915 332 265 10	adjusting ring 3,40 MM		X	
(9)	915 332 265 11	adjusting ring 3,50 MM		X	
(9)	915 332 265 12	adjusting ring 3,60 MM		X	
(9)	915 332 265 13	adjusting ring 3,70 MM		X	
10	915 332 263 00	washer		2	
11	477 332 344	intermediate ring		1	
12	999 059 027 00	taper roller bearing		2	
13	477 332 209 A	joint flange		2	
14	900 074 291 02	hexagon-head bolt M 10 X 80 $ 18 MM		2	
14	900 074 291 02	hexagon-head bolt M 10 X 78 $ 21 MM		2	
		- -- E N D -- -			

Pos	Part Number	Name	Remarks	Qty	Model

Model	Year	MG	SG	Illustration	Restrictions	Update				
924	79	3	05	305-10		187	10:57	06.04.2005	PORSCHE	PET	PORSCHE

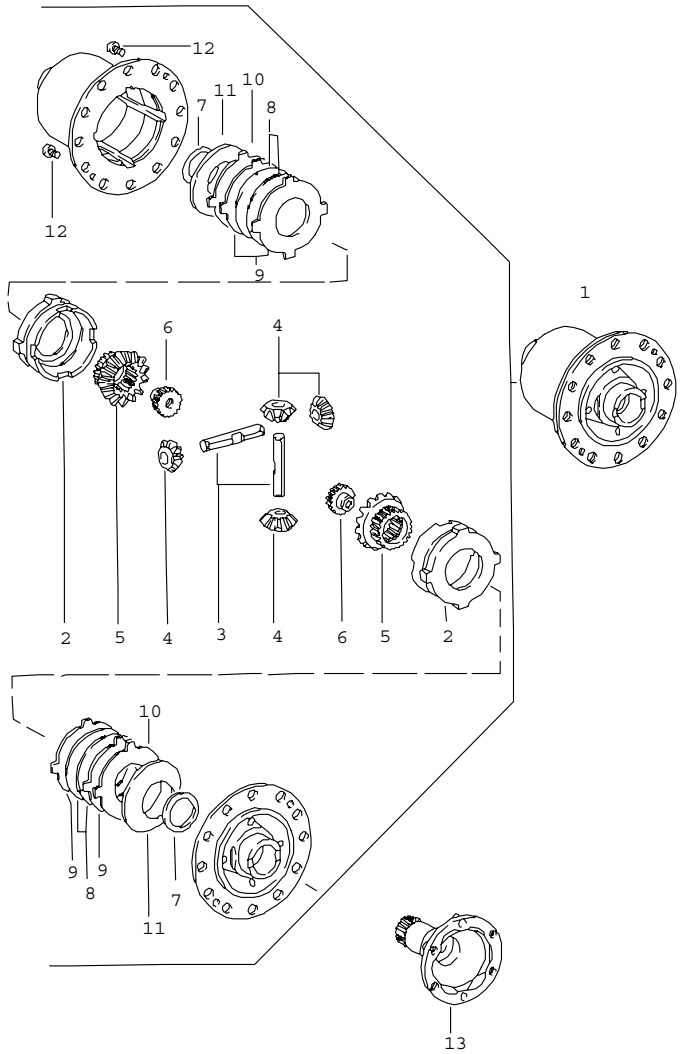

Pos	Part Number	Name	Remarks	Qty	Model
		limited-slip differential 5-speed			M 220
1	930 332 053 03	limit.-slip different. 40%		1	
2	901 332 511 11	thrust ring		2	
3	915 332 541 02	differential shaft		2	
4	915 332 531 02	bevel pinion		4	
5	930 332 535 01	shaft bevel gear		2	
6	928 332 279 01	threaded disc		2	
7	901 332 561 11	thrust washer		2	
8	917 332 551 10	inner disc 2,00 MM		4	
9	917 332 552 10	disc with external splines 1,90 MM		4	
9	917 332 552 11	disc with external splines 2,00 MM		X	
9	917 332 552 12	disc with external splines 2,10 MM		X	
10	930 332 553 00	lamina 1,40 MM		2	
11	928 332 555 00	cup spring		2	
12	900 119 002 00	pan-head screw M 6 X 10		2	
13	477 332 209 A	joint flange		2	
		- -- E N D -- -			

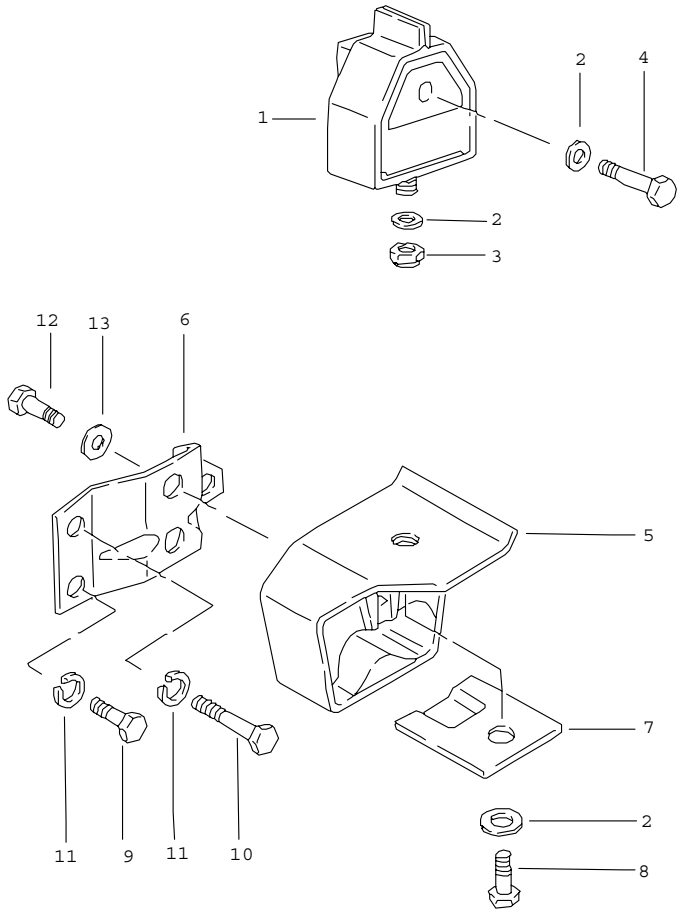

Pos	Part Number	Name	Remarks	Qty	Model
		transmission suspension			
		POS.1-4 for 5th speed manual transmission			
1	477 399 153 H	transmission mounting		2	
2	900 025 008 09	washer		4	
3	N 022 149 2	lock nut		2	
4	N 010 473 6	hexagon-head bolt M 10 X 75		2	
		POS.5-13 for 4th speed manual transmission			
5	477 399 153 J	transmission mounting in pairs use use also: 477.399.167.E 477.399.168.E		2	
(6)	477 399 167 B	bracket	/L	1	
6	477 399 167 E	bracket use also: 2X 477.399.153.J 1X 477.399.168.E	/L	1	
(6)	477 399 168 C	bracket	/R	1	
6	477 399 168 E	bracket use also: 2X 477.399.153.J 1X 477.399.167.E	/R	1	
7	477 399 281	stop plate		2	
8	N 010 254 6	hexagon-head bolt M 10 X 25		2	
9	N 010 240 7	hexagon-head bolt M 8 X 20		2	
10	N 010 340 4	hexagon-head bolt M 8 X 40		2	
11	N 012 009 3	lock ring		4	
12	900 075 029 09	hexagon-head bolt M 8 X 25		4	

Pos	Part Number	Name	Remarks	Qty	Model	Pos	Part Number	Name	Remarks	Qty	Model
13	N 011 525 13	washer		4							
		- -- E N D -- -									

Model	Year	MG	SG	Illustration	Restrictions	Update			
924	79	3	07	307-00		187	10:58	06.04.2005	PORSCHE PET PORSCHE

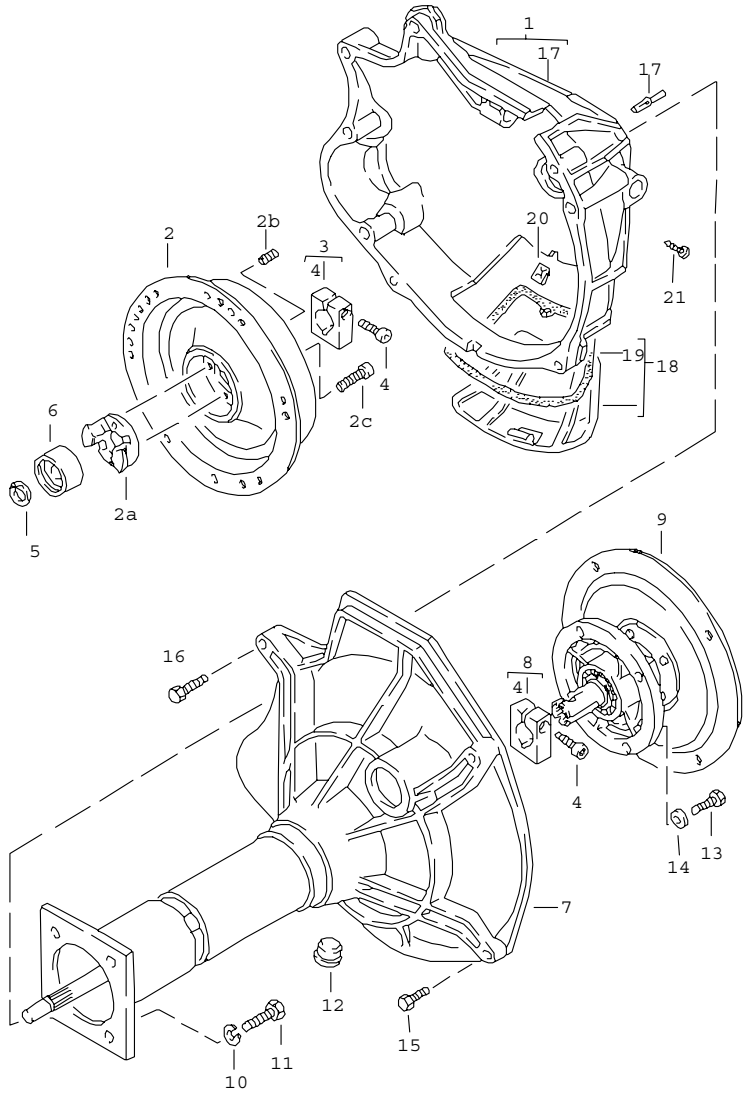

Pos	Part Number	Name	Remarks	Qty	Model
		central tube automatic transmission			
1	477 521 109	clutch housing		1	
2	477 521 603	damper		1	
2A	477 521 617	stop plate		1	
2B	999 095 019 00	clamping pin S 10 X 20		2	
2C	N 014 725 2	pan-head screw M 8 X 25		2	
3	477 521 247 E	terminal		1	
4	477 521 501 A	pan-head screw		2	
5	900 273 002 01	circlip 17 X 1		1	
6	477 521 181 A	spacer sleeve 1,00		1	
(6)	477 521 182 A	spacer sleeve 2,00		X	
(6)	477 521 183 A	spacer sleeve 3,00		X	
(6)	477 521 184 A	spacer sleeve 4,00		X	
(6)	477 521 185 A	spacer sleeve 5,00		X	
(6)	477 521 186 A	spacer sleeve 6,00		X	
(6)	477 521 187 A	spacer sleeve 7,00		X	
(6)	477 521 188 A	spacer sleeve 8,00		X	
(6)	477 521 189 A	spacer sleeve 9,00		X	
7	E 477 521 130 C	central tube ready for installation use also: 477.521.277.C		1	
8	477 521 247 D	terminal		1	
9	477 521 110 C	converter mounting		1	

Pos	Part Number	Name	Remarks	Qty	Model	Pos	Part Number	Name	Remarks	Qty	Model
10	900 027 016 02	lock ring		4							
11	N 010 275 4	hexagon-head bolt M 10 X 35		4							
12	477 521 277 A	cap		1							
(12)	477 521 277 C	cap		X							
13	900 075 029 09	hexagon-head bolt M 8 X 25		4							
14	N 012 241 11	spring washer B 8 X 15		4							
15	N 010 185 3	hexagon-head bolt M 12 X 80		2							
16	N 040 240 2	hexagon-head bolt M 10 X 50		1							
17	N 012 690 1	grooved pin 10 X 32		3							
18	477 521 213	cover		1							
19	477 521 214	gasket		1							
20	999 591 327 02	speed nut B 6,3 X 23		1							
21	N 013 947 3	oval-head screw 6,3 X 19		1							
		- -- E N D -- -									

Model	Year	MG	SG	Illustration	Restrictions	Update	10:58	06.04.2005	PORSCHE PET PORSCHE
924	79	3	08	308-00		187			

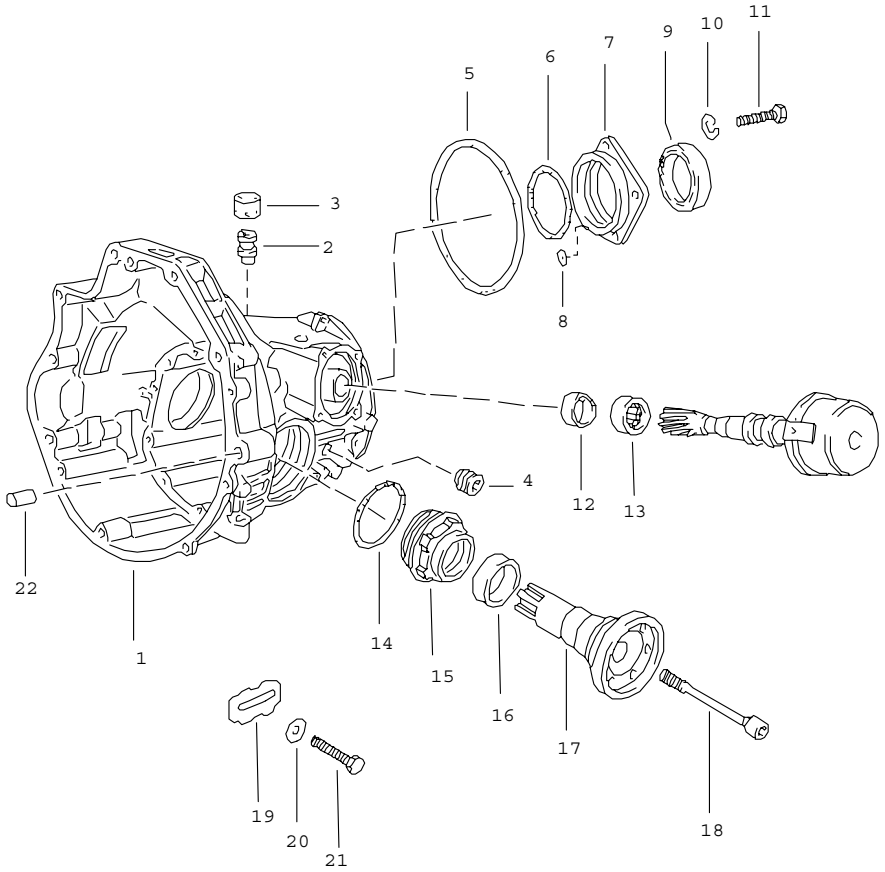

Pos	Part Number	Name	Remarks	Qty	Model
		replacement transmission final-drive housing automatic transmission			
-	> 087 300 035 M	replacement transmission ready for installation		1	RK
1	E 087 409 051 F	final-drive housing G >> RK 15 06 7		1	
1	087 409 051 H	final-drive housing G RK 16 06 7 >>		1	
2	A 010 409 847	breather pipe		2	
2	010 409 847	breather pipe		2	
3	A 087 409 841	cap		2	
3	087 409 841	cap		2	
4	111 301 127 E	screw plug M 24 X 1,5		1	
5	* 010 409 549 B	round seal		1	
6	* 087 409 549	round seal		1	
7	E 087 409 623	cover G >> RK 15 06 7		1	
(7)	087 409 623 A	cover G RK 16 06 7 >>		1	
8	* 089 409 637 A	sealing ring		1	
9	087 409 529 B	radial shaft seal		2	
10	N 012 038 1	lock ring		5	
(10)	N 012 028 1	lock ring		5	
11	N 010 233 6	hexagon-head bolt M 8 X 28		5	
(11)	900 075 111 08	hexagon-head bolt M 10 X 30		5	
12	* 087 409 133	radial shaft seal		1	
13	082 409 139	needle-roller bearing		1	
14	* 011 519 345	round seal		2	
15	087 409 173	adjusting ring		2	
16	* 016 409 399 B	radial shaft seal		1	

Pos	Part Number	Name	Remarks	Qty	Model
17	087 409 355	flanged shaft	/L	1	
(17)	087 409 356	flanged shaft	/R	1	
18	087 409 359	screw	/L	1	
(18)	087 409 360	screw	/R	1	
19	010 409 257	tab washer		2	
20	N 012 226 5	spring washer		2	
21	N 010 215 13	hexagon-head bolt M 6 X 15		2	
22	019 301 153	dowel sleeve		2	
		- -- E N D -- -			

Pos	Part Number	Name	Remarks	Qty	Model

Model	Year	MG	SG	Illustration	Restrictions	Update	10:58	06.04.2005	PORSCHE PET PORSCHE
924	79	3	09	309-00		187			

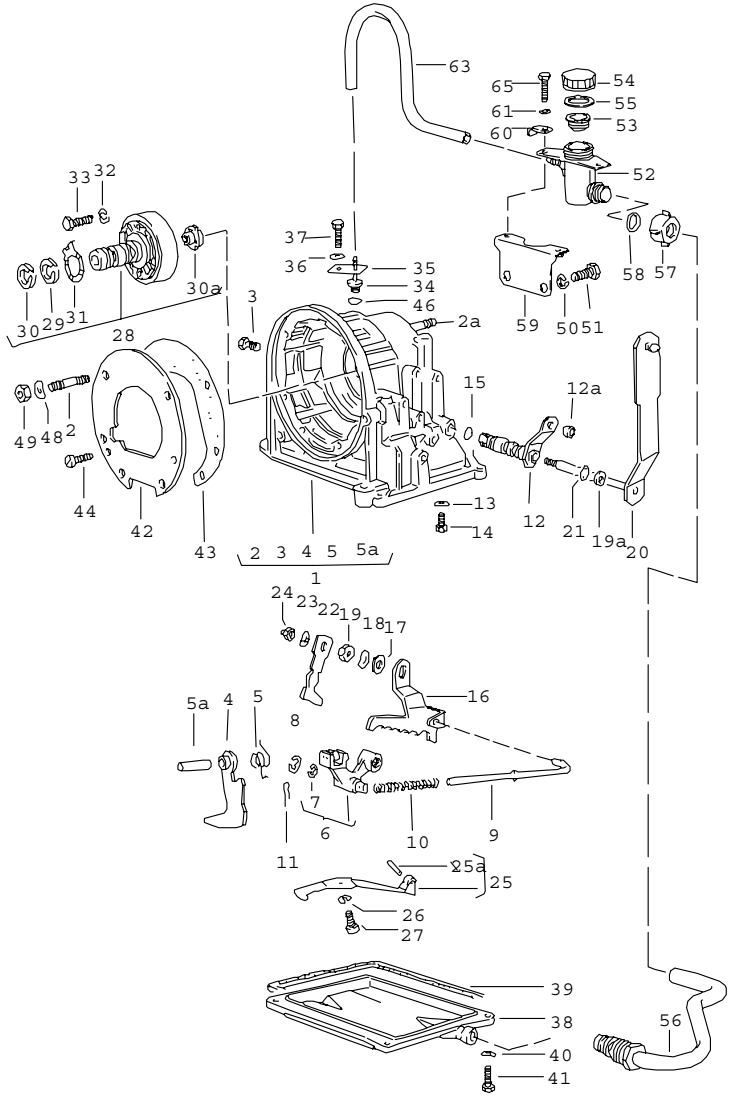

Pos	Part Number	Name	Remarks	Qty	Model
		transmission case automatic transmission			
1	010 321 101 G	transmission case use also: 010.323.389.E 010.323.383		1	
2	N 900 044 02	stud AM 8A X 56		4	
2A	E N 014 523 2	stud AM 10A X 38		2	
3	003 507 133 A	screw plug M 10 X 1		3	
4	010 321 117 B	lever parking lock		1	
5	010 321 121 A	torsion spring		1	
5A	010 321 123	bolt		1	
6	E 010 321 135 A	engaging lever parking lock		1	
7	900 116 003 02	circlip		1	
8	E N 012 438 1	lock washer		1	
-	N 012 436 2	lock washer		1	
9	010 321 155	operating rod		1	
10	E 010 321 159	compression spring		1	
11	E 010 321 161	securing clip		1	
12	087 321 173 A	lever for cable control		1	
12A	003 321 177	bush		1	
13	N 012 226 5	spring washer		1	
14	N 010 224 1	hexagon-head bolt M 6 X 3,5		1	
15	* N 028 201 2	round seal		X	
16	010 321 191 A	locking segment		1	
17	211 611 179	washer		1	
18	N 012 238 5	spring washer		1	
19	N 011 164 2	hexagon nut		1	

Pos	Part Number	Name	Remarks	Qty	Model
19A	010 321 180	support ring		1	
20	087 321 201	lever for cable control		1	
21	* 010 321 182	round seal		1	
22	010 321 215 C	lever regulating valve		1	
23	N 012 228 3	spring washer		1	
24	N 011 008 8	hexagon nut		1	
25	010 321 221	leaf spring		1	
25A	E N 013 325 1	tensioning sleeve		1	
26	N 012 038 1	lock ring		1	
27	N 010 239 11	hexagon-head bolt M 8 X 18		1	
28	010 321 241 F	oil pump		1	
-	003 321 263	gear set oil pump		1	
29	003 321 261	piston ring		2	
30	010 321 261	piston ring		2	
-	010 321 279	plate		1	
30A	003 321 273	driver		1	
31	010 321 285	thrust washer		1	
32	N 012 006 4	lock ring		5	
33	N 010 347 3	hexagon-head bolt M 6 X 35		5	
34	477 321 303 A	cover		1	
-	211 843 661	washer		1	
35	011 321 307	clip		1	
36	N 012 226 5	spring washer		1	
37	999 072 005 09	hexagon-head bolt M 6 X 12		1	
38	010 321 359 F	oil pan		1	
39	* 010 321 371 B	gasket		1	
40	N 012 038 1	lock ring		4	
41	N 010 240 16	hexagon-head bolt M 8 X 20		4	
42	E 010 321 383 B	intermediate plate		1	
43	* 010 321 385 B	gasket		2	
44	E 900 014 004 02	pan-head screw AM 5 X 15		1	
46	* 003 321 419	round seal		1	
48	N 012 228 3	spring washer		4	
49	N 011 008 8	hexagon nut		4	
50	N 012 028 1	lock ring		2	
51	N 010 253 7	hexagon-head bolt M 10 X 22		2	
		ATF - OELEINFUELLUNG			
52	477 321 475	container		1	
53	477 321 479 A	strainer		1	
54	477 321 481	cap		1	
55	477 321 483 A	gasket		1	
56	477 321 405	filler tube		1	
57	477 321 485	union nut		1	
58	477 321 487	o-ring		2	
59	477 321 491	support		1	
60	477 321 494	packing plate		2	
61	N 012 226 5	spring washer		2	
62	N 010 215 13	hexagon-head bolt M 6 X 15		2	
63	477 321 495	hose 340 MM long		1	
		- -- E N D -- -			

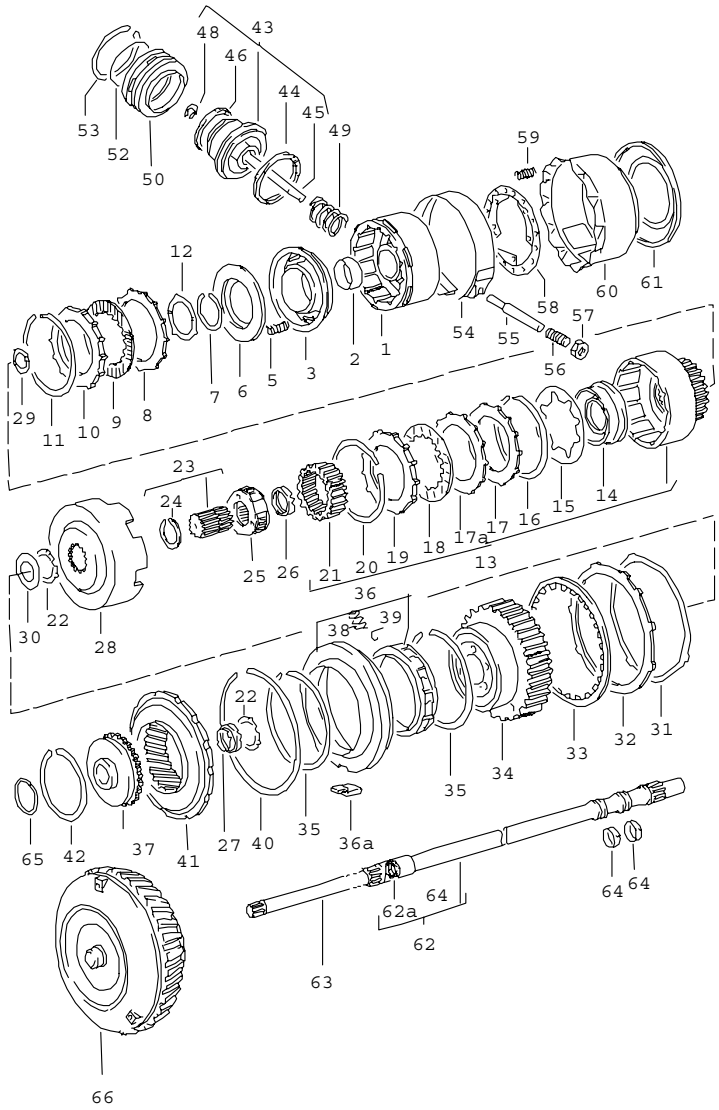

Pos	Part Number	Name	Remarks	Qty	Model
		shift mechanism automatic transmission			
1	010 323 109 C	clutch drum		1	
2	010 323 115	bearing sleeve		1	
3	010 323 121 B	piston		1	
5	010 323 129 A	compression spring		24	
6	010 323 131 A	concave washer		1	
7	003 323 135 A	circlip		1	
8	010 323 139	disc with external splines		4	
9	010 323 141 C	disc with external splines		4	
10	010 323 153	pressure plate		1	
11	E 010 323 157	circlip 2,03		1	
11	010 323 157 A	circlip 1,50		X	
11	E 010 323 157 B	circlip 1,70		X	
11	010 323 157 H	circlip 2,30		X	
11	010 323 157 J	circlip 2,50		X	
12	010 323 161 A	thrust washer 60		1	
13	010 323 205	forward clutch		1	
14	010 323 217 A	piston		1	
15	010 323 229 D	cup spring forward clutch		1	
16	E 010 323 157	circlip		1	
17	010 323 237 A	pressure plate		1	
17A	010 323 139	disc with external splines forward clutch		3	
18	010 323 241 B	inner disc		4	
19	010 323 253 A	pressure plate 6,40		1	

Pos	Part Number	Name	Remarks	Qty	Model
19	010 323 253 B	pressure plate 6,80		X	
19	010 323 253 C	pressure plate 7,20		X	
19	010 323 253 D	pressure plate 7,60		X	
19	010 323 253 F	pressure plate 6,00		X	
20	E 010 323 159 B	lock ring		1	
21	010 323 273 B	ring gear		1	
22	010 323 291	thrust washer		1	
23	010 323 285 E	sun gear		1	
24	E N 042 451 1	snap ring		1	
25	010 323 303	planet-gear carrier		1	
26	010 323 340 D	needle-roller bearing		1	
27	010 323 339 D	needle-roller bearing		1	
28	010 323 281	driving shell		1	
29	003 323 165	thrust washer 40		1	
30	010 323 293 B	thrust washer		1	
31	010 323 295 C	spring washer		1	
32	010 323 227 A	disc with external splines		5	
33	010 323 231 C	inner disc		5	
34	090 323 805	planet-gear carrier		1	
35	010 323 651	circlip		2	
(36)	E 010 323 383 B	1st gear free wheel lock G >> RK 20 01 8		1	
36	010 323 383 C	free wheel lock 1st gear G RK 21 01 8 >>		1	
36A	010 323 389 E	key		1	
37	087 323 373 A	hub		1	
38	010 323 643	compression spring		10	
39	N 026 360 1	roller		10	
40	010 323 653 A	circlip		1	
41	090 323 363 A	ring gear		1	
42	090 323 369	circlip		1	
43	010 323 511 K	piston		1	
44	003 323 525 A	sealing ring		1	
45	010 323 517 D	piston rod		1	
46	010 323 487 C	sealing ring		1	
48	010 323 541 B	lock washer		1	
49	010 323 505 A	compression spring		1	
50	087 323 529	cover		1	
52	010 323 533	round seal		3	
53	010 323 537 A	circlip		1	
54	010 323 461 A	brake band		1	
55	010 323 543 A	bolt		1	
56	010 323 455 A	adjusting screw		1	
57	N 011 162 9	hexagon nut M 12 X 1,5		1	
58	010 323 497 C	supporting plate		1	
59	010 323 489 B	compression spring		20	
60	010 323 493 D	pipe		1	
61	010 323 479 A	piston		1	
62	087 323 553 A	turbine shaft		1	
62A	087 323 559	gasket		1	
63	010 323 561 A	oil pump shaft		1	
64	010 323 557 A	piston ring		2	
65	010 323 345 C	adjusting shim 0,40		1	
65	010 323 346 C	adjusting shim 1,20		X	
66	082 323 571	converter		1	RK

Pos	Part Number	Name	Remarks	Qty	Model	Pos	Part Number	Name	Remarks	Qty	Model
		- -- E N D -- -									

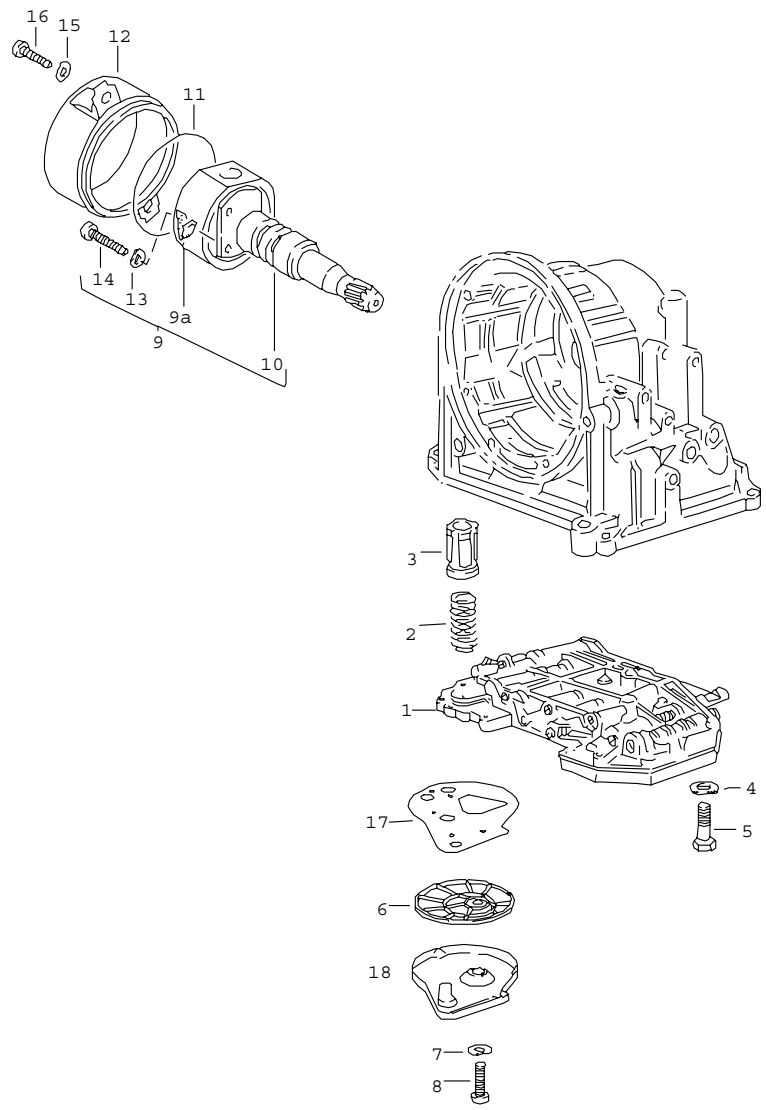

Pos	Part Number	Name	Remarks	Qty	Model
		hydraulic control unit oil strainer regulator automatic transmission			
1	087 325 032 H	hydraulic control unit		1	RK
2	003 325 417	compression spring		1	
3	003 325 405 F	piston		1	
4	N 012 226 5	spring washer		11	
5	N 010 346 5	hexagon-head bolt M 6 X 30		11	
6	010 325 421 A	oil strainer		1	
7	N 012 222 4	spring washer		2	
8	E 900 014 004 02	pan-head screw AM 5 X 15		2	
9	087 325 041	regulator		1	
9A	010 325 329	strainer		1	
10	E 087 325 305	governor shaft		1	
11	* 011 519 345	round seal		1	
12	089 325 371	cover		1	
13	N 012 222 4	spring washer		2	
14	N 014 153 1	oval-head screw M 5 X 40		2	
15	N 012 228 3	spring washer		2	
16	N 010 240 16	hexagon-head bolt 8 X 20		2	
17	010 325 443	gasket		1	
18	010 325 429 A	cover		1	
		- -- E N D -- -			

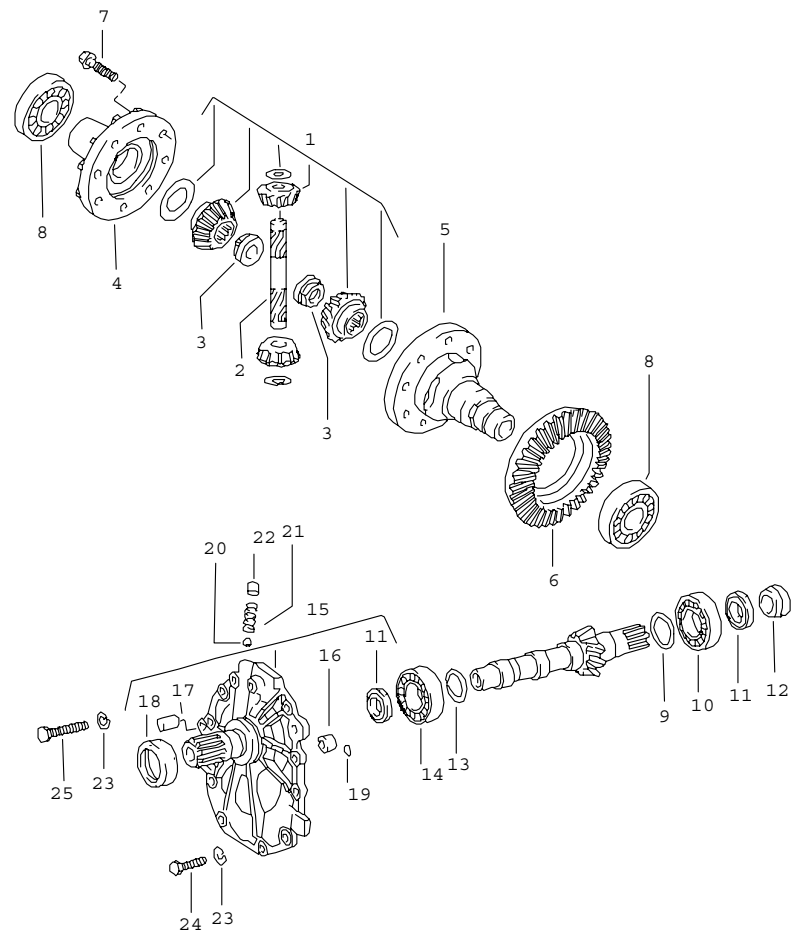

Pos	Part Number	Name	Remarks	Qty	Model
		differential automatic transmission			
1	* 090 598 081	repair kit for differential		1	
2	087 409 177	axle		1	
3	016 409 161	nut		2	
4	087 409 365	cover		1	
5	087 409 121	differential housing		1	
6	E 087 409 143 D	ring gear and pinion shaft 11:38	-77	1	RK
6	087 409 143 G	ring gear and pinion shaft 11:38	78-	1	RK
7	087 409 135 A	hexagon-head bolt M 10 X 1 X 24		10	
8	113 517 185 C	taper roller bearing		2	
9	087 409 641 D	adjusting shim 1,10		1	
9	087 409 641 E	adjusting shim 1,125		X	
9	087 409 641 F	adjusting shim 1,15		X	
9	087 409 641 G	adjusting shim 1,175		X	
9	087 409 641 H	adjusting shim 1,20		X	
9	087 409 641 J	adjusting shim 1,225		X	
9	087 409 641 K	adjusting shim 1,25		X	
9	087 409 641 L	adjusting shim 1,275		X	
9	087 409 641 M	adjusting shim 1,30		X	
9	087 409 641 N	adjusting shim 1,325		X	
9	087 409 641 P	adjusting shim 1,35		X	

Pos	Part Number	Name	Remarks	Qty	Model
9	087 409 641 Q	adjusting shim 1,375		X	
9	087 409 641 R	adjusting shim 1,40		X	
9	087 409 641 S	adjusting shim 1,425		X	
9	087 409 641 T	adjusting shim 1,45		X	
9	087 409 641 AA	adjusting shim 1,475		X	
9	087 409 641 AB	adjusting shim 1,50		X	
9	087 409 641 AC	adjusting shim 1,525		X	
9	087 409 641 AD	adjusting shim 1,55		X	
9	087 409 641 AE	adjusting shim 1,575		X	
9	087 409 641 AF	adjusting shim 1,60		X	
9	087 409 641 AG	adjusting shim 1,625		X	
9	087 409 641 AH	adjusting shim 1,65		X	
9	087 409 641 AJ	adjusting shim 1,675		X	
9	087 409 641 AK	adjusting shim 1,70		X	
9	087 409 641 AL	adjusting shim 1,725		X	
9	087 409 641 AM	adjusting shim 1,75		X	
9	087 409 641 AN	adjusting shim 1,775		X	
9	087 409 641 AP	adjusting shim 1,80		X	
9	087 409 641 AQ	adjusting shim 1,828		X	
9	087 409 641 AR	adjusting shim 1,85		X	
9	087 409 641 AS	adjusting shim 1,875		X	
9	087 409 641 AT	adjusting shim 1,90		X	
10	087 409 551 C	taper roller bearing		1	
11	087 409 085 B	radial shaft seal		2	
12	087 409 639 A	bush		1	
13	082 519 141 AE	adjusting shim 1,10		1	
13	082 519 141 AF	adjusting shim 1,125		X	
13	082 519 141 AG	adjusting shim 1,15		X	
13	082 519 141 AH	adjusting shim 1,175		X	
13	082 519 141 AJ	adjusting shim 1,20		X	
13	082 519 141 AK	adjusting shim 1,225		X	
13	082 519 141 AL	adjusting shim 1,25		X	
13	082 519 141 AM	adjusting shim 1,275		X	
13	082 519 141 AN	adjusting shim 1,30		X	
13	082 519 141 AP	adjusting shim 1.325		X	
13	082 519 141 AQ	adjusting shim 1,35		X	
13	082 519 141 AR	adjusting shim 1,375		X	
13	082 519 141 AS	adjusting shim 1,40		X	
13	082 519 141 AT	adjusting shim 1,425		X	

Pos	Part Number	Name	Remarks	Qty	Model
13	082 519 141 BA	adjusting shim 1,45		X	
13	082 519 141 BB	adjusting shim 1.475		X	
13	082 519 141 BC	adjusting shim 1,50		X	
13	082 519 141 BD	adjusting shim 1.525		X	
13	082 519 141 BE	adjusting shim 1,55		X	
13	082 519 141 BF	adjusting shim 1,575		X	
13	082 519 141 BG	adjusting shim 1,60		X	
13	082 519 141 BH	adjusting shim 1,625		X	
13	082 519 141 BJ	adjusting shim 1,65		X	
13	082 519 141 BK	adjusting shim 1,675		X	
13	082 519 141 BL	adjusting shim 1,70		X	
13	082 519 141 BM	adjusting shim 1,725		X	
13	082 519 141 BN	adjusting shim 1,75		X	
13	082 519 141 BP	adjusting shim 1,775		X	
13	082 519 141 BQ	adjusting shim 1,80		X	
13	082 519 141 BR	adjusting shim 1,825		X	
13	082 519 141 BS	adjusting shim 1,85		X	
13	082 519 141 BT	adjusting shim 1,875		X	
13	082 519 141 CA	adjusting shim 1,90		X	
14	003 519 251	taper roller bearing		1	
15	087 409 523 B	cover		1	
16	019 301 153	dowel sleeve		1	
17	N 022 301 1	straight pin A 10 X 20		1	
18	010 409 568	radial shaft seal		1	
19	089 409 637 A	sealing ring		2	
20	N 025 657 1	ball		1	
21	089 409 713	spring		1	
22	087 409 095	cover		2	
23	N 012 038 1	lock ring		11	
24	N 010 233 6	hexagon-head bolt M 8 X 28		9	
25	N 040 276 1	hexagon-head bolt M 8 X 52		2	
		- -- E N D -- -			

Model	Year	MG	SG	Illustration	Restrictions	Update	10:59	06.04.2005	PORSCHE PET PORSCHE
924	79	3	12	312-00		187			

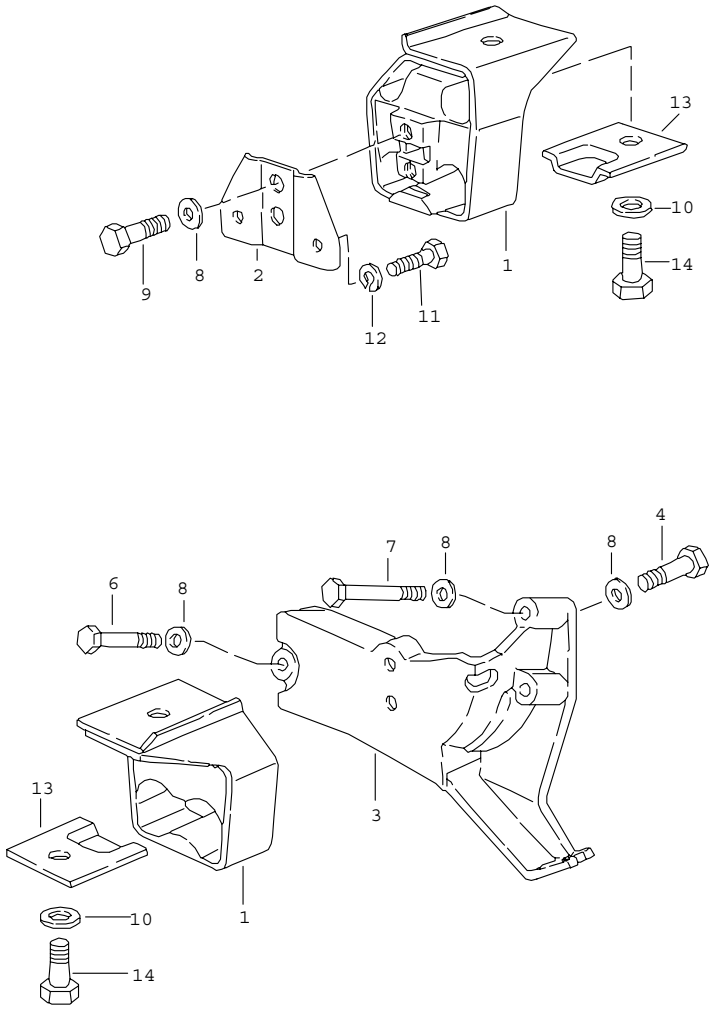

Pos	Part Number	Name	Remarks	Qty	Model
		transmission suspension automatic transmission			
1	477 399 153 J	transmission mounting only by sets use also: 477.399.169.C 477.399.171.D		2	
(2)	E 477 399 169 A	suspension plate	/R -78	1	
2	477 399 169 C	suspension plate	/R 79-	1	
(3)	477 399 171 C	bracket	/L	1	
3	477 399 171 E	bracket	/L	1	
4	900 075 111 08	hexagon-head bolt M 10 X 30		1	
-	N 012 230 6	spring washer		1	
6	N 040 262 2	hexagon-head bolt M 8 X 50		2	
7	N 010 385 3	hexagon-head bolt M 8 X 85		1	
8	N 011 525 13	washer		3	
9	N 010 254 6	hexagon-head bolt M 10 X 25		1	
10	900 025 008 09	washer		1	
11	N 010 240 7	hexagon-head bolt M 8 X 20		2	
12	N 012 009 3	lock ring		2	
13	477 399 281	stop plate		2	
14	N 010 254 6	hexagon-head bolt M 10 X 25		2	
-	900 027 016 02	lock ring		2	
		- -- E N D -- -			

Model	Year	MG	SG	Illustration	Restrictions	Update		
924	79	3	98	REP		187	8:43	12.04.2005

Pos	Part Number	Name	Remarks	Qty	Model
		repair kits			
>>	> 088 398 001 A	set of seals for 4-speed transmission comprising:		1	YR XT
-	088 301 699 A	sealing ring		1	
-	928 303 120 01	shaft seal		1	
-	016 409 399 B	radial shaft seal		2	
-	113 301 185 A	sealing ring		1	
-	088 301 185	sealing ring		1	
-	088 311 599	sealing ring		2	
-	999 113 275 40	shaft seal		1	
>>	> 477 300 911	set of seals for 5-speed transmission comprising:		1	VA VB
-	999 113 183 40	radial shaft seal		2	
-	477 301 191 A	gasket		1	
-	001 301 227	radial shaft seal		1	
-	014 311 113 B	radial shaft seal		1	
-	999 701 392 40	o-ring		1	
>>	> 931 300 911 00	set of seals for 5-speed transmission comprising:		1	G31.01
-	999 113 183 40	radial shaft seal		2	
-	477 301 191 A	gasket		1	
-	001 301 227	radial shaft seal		1	
-	999 113 247 40	radial shaft seal		1	
-	999 701 392 40	o-ring		1	
>>	> 087 398 001	set of seals for automatic transmission comprising:		1	RK RL
-	010 321 182	round seal		1	

Model	Year	MG	SG	Illustration	Restrictions	Update		
924	79	3	98	REP		187	8:43	12.04.2005

Pos	Part Number	Name	Remarks	Qty	Model
-	010 321 371 B	gasket		1	
-	010 321 385 B	gasket		1	
-	003 321 419	round seal		2	
-	010 323 117	sealing ring		1	
-	010 323 119	sealing ring		1	
-	010 323 487 C	sealing ring		1	
-	003 323 525 A	sealing ring		1	
-	010 323 533	round seal		3	
-	087 409 085 B	radial shaft seal		2	
-	087 409 133 A	radial shaft seal		1	
-	016 409 399 B	radial shaft seal		2	
-	087 409 529 B	radial shaft seal		2	
-	010 409 549 B	round seal		1	
-	087 409 549	round seal		1	
-	010 409 568	radial shaft seal		1	
-	089 409 637 A	sealing ring		1	
-	011 519 345	round seal		3	
-	N 028 201 2	round seal		1	
>>	> 090 598 081	repair kit differential automatic and 4-speed comprising:		1	YR XT RK RL
		differential pinions large		2	
		differential pinions small		2	
-	011 519 215	thrust washer for differential pinions large		2	
-	016 409 170	thrust washer for differential pinions small use also: 088.409.249 A 088.409.249 B		2	

Model	Year	MG	SG	Illustration	Restrictions	Update		
924	79	3	98	REP		187	8:43	12.04.2005

Pos	Part Number	Name	Remarks	Qty	Model
>>	> 928 116 901 00	repair kit clutch operating cylinder comprising: bellows lock washer boot dust boot ring - -- E N D -- -		1 1 1 1 1 2	TURBO

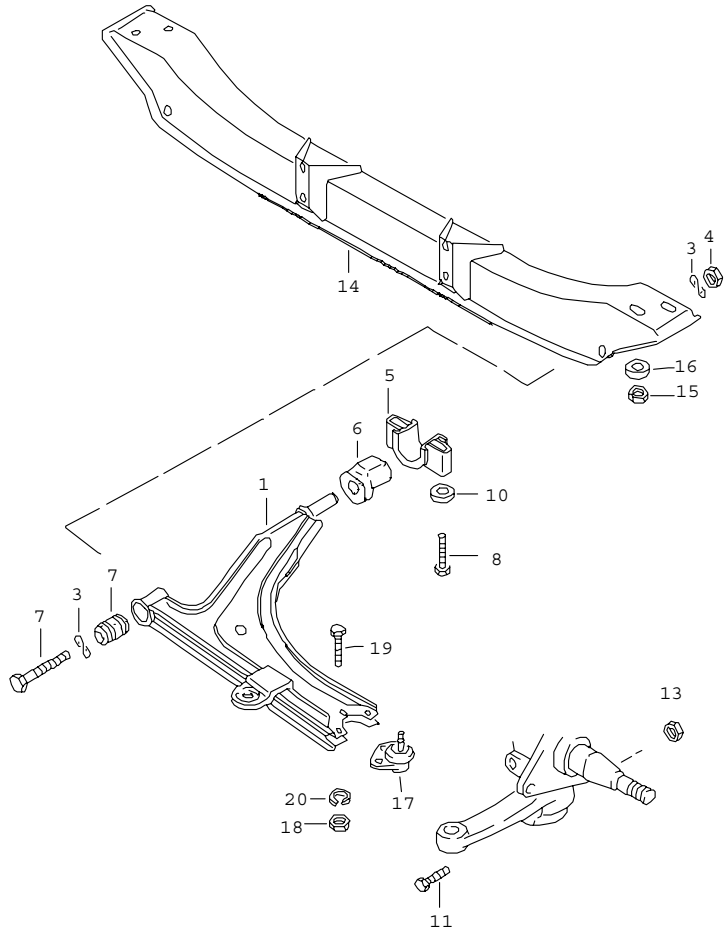

Pos	Part Number	Name	Remarks	Qty	Model
		control arm cross member			
1	477 407 153 F	control arm		2	
2	E N 010 186 2	hexagon-head bolt M 12 X 1,5 X 85		2	
3	900 028 014 02	spring washer		4	
4	N 022 141 4	lock nut M 12 X 1,5		2	
5	477 407 169	clip		2	
6	E 171 407 181 A	rubber mounting	-78	2	
(6)	477 407 181 A	rubber mounting	79-	2	
7	171 407 182 D	rubber mounting inner		2	
8	N 040 321 1	hexagon-head bolt M 10 X 65		4	
10	477 407 425	washer		4	
11	N 010 445 6	hexagon-head bolt M 10 X 45		2	
13	N 021 130 2	lock nut		2	
14	477 407 321 J	cross member	-78	1	
(14)	477 407 321 G	cross member	79-	1	
15	N 011 185 6	hexagon nut		4	
16	N 015 402 1	washer		4	
17	171 407 365 C	ball joint 15 MM $	-77	2	
(17)	171 407 365 G	ball joint 17 MM $	78-	2	
18	N 011 007 7	hexagon nut		6	
19	N 040 204 3	hexagon-head bolt M 7 X 20		6	
20	N 042 001 1	lock ring		6	
		- -- E N D -- -			

Model	Year	MG	SG	Illustration	Restrictions	Update			
924	79	4	01	401-05		187	11:00	06.04.2005	PORSCHE PET PORSCHE

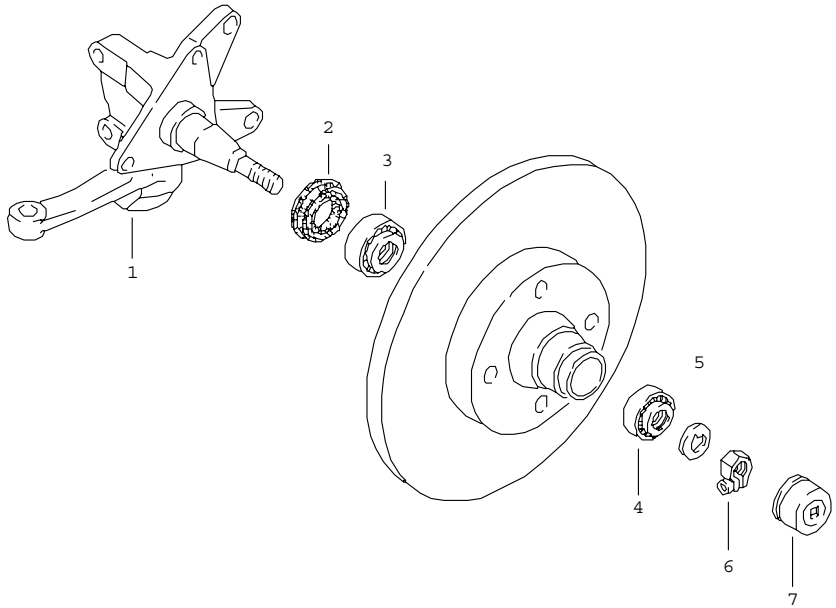

Pos	Part Number	Name	Remarks	Qty	Model
		steering knuckle			924
1	477 407 311 G	steering knuckle	/L -78	1	
(1)	477 407 312 G	steering knuckle use also: 171.407.365.G	/R -78 -77	1	
(1)	477 407 311 K	steering knuckle	/L 79-	1	
(1)	E 477 407 312 K	steering knuckle	/R 79-	1	
2	311 405 641 B	sealing ring		2	
3	311 405 625 D	taper roller bearing		2	
4	311 405 645	taper roller bearing		2	
5	E 311 405 661	thrust washer		2	
6	131 405 670	clamping nut		2	
7	477 405 691	cap	/L	1	
(7)	477 405 692	cap	/R	1	
		- -- E N D -- -			

Model	Year	MG	SG	Illustration	Restrictions	Update			
924	79	4	01	401-10		187	11:00	06.04.2005	PORSCHE PET PORSCHE

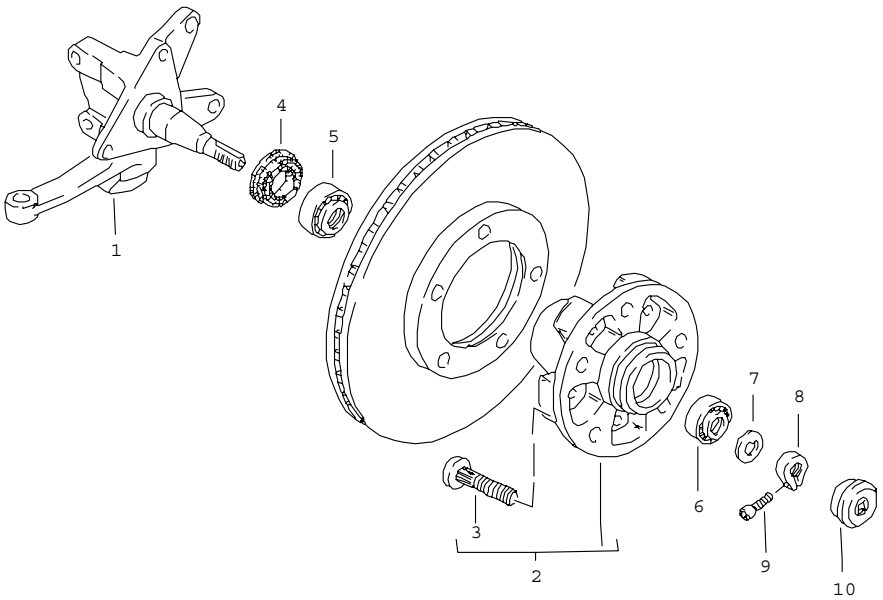

Pos	Part Number	Name	Remarks	Qty	Model
		steering knuckle			924,M 471 TURBO
1	477 407 311 L	steering knuckle	/L	1	
(1)	477 407 312 L	steering knuckle	/R	1	
2	477 405 065 B	front wheel hub		2	
3	904 341 671 00	wheel bolt		10	
4	477 405 641	radial sealing ring		2	
5	999 059 098 00	taper roller bearing		2	
6	999 059 065 00	taper roller bearing		2	
7	911 341 663 00	thrust washer		2	
8	911 341 673 00	clamping nut		2	
9	999 119 001 01	pan-head screw		2	
10	477 405 691 C	cap	/L	1	
(10)	477 405 692 C	cap	/R	1	
		- -- E N D -- -			

Model	Year	MG	SG	Illustration	Restrictions	Update	11:00	06.04.2005	PORSCHE PET PORSCHE
924	79	4	02	402-00		187			

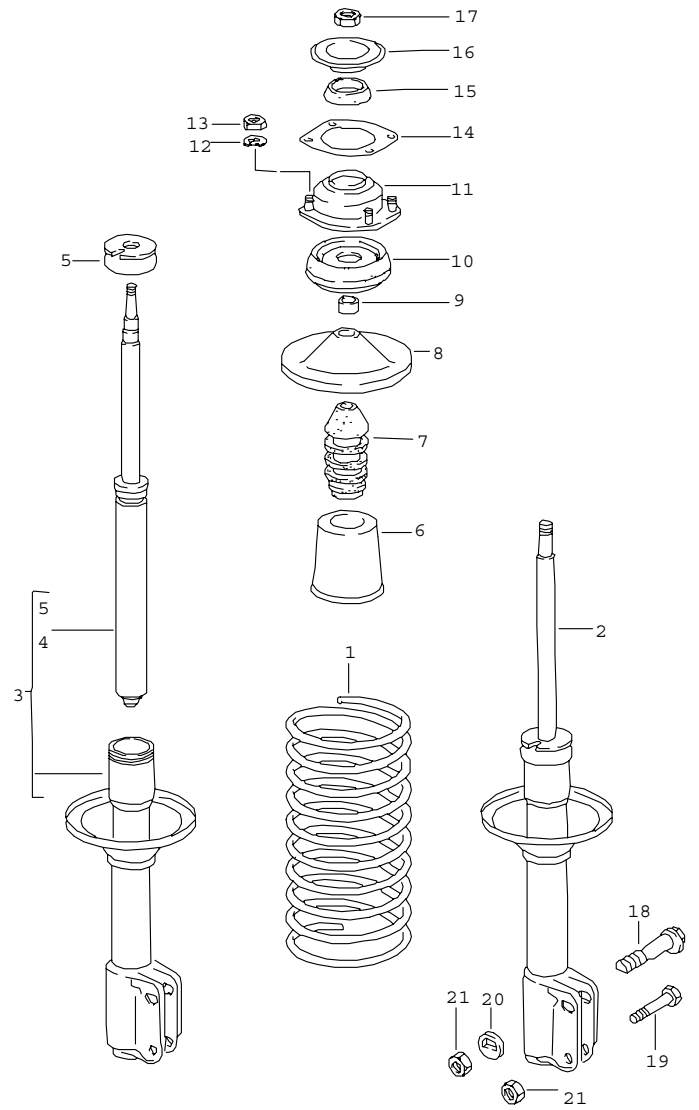

Pos	Part Number	Name	Remarks	Qty	Model
		springs shock absorber front			
1	477 411 105 G	coil spring 1 set marked		2	924
	954	red			
(1)	477 411 105 M	coil spring 1 set marked		2	M 404/471
	954	green			
(1)	477 411 105 Q	coil spring 1 set marked		2	TURBO
	954	blue			
2	944 343 031 14	vibration damper	/L	1	924
(2)	944 343 032 14	vibration damper	/R	1	924
2	944 343 031 12	vibration damper	/L	1	TURBO
(2)	944 343 032 12	vibration damper	/R	1	TURBO
3	944 343 031 13	vibration damper - koni -	/L	1	924
3	944 343 032 13	vibration damper - koni -	/R	1	924
3	944 343 031 11	vibration damper - koni -	/L	1	TURBO
(3)	944 343 032 11	vibration damper - koni -	/R	1	TURBO
4	477 412 059 A	insert - koni -		2	924
(4)	944 343 059 00	vibration damper - koni -		2	TURBO
5	171 412 045	union nut		2	
6	171 412 135	boot		2	
7	171 412 303 C	rubber stop		2	
8	133 412 341	concave washer		2	
9	E 823 412 365	spacer sleeve		2	

Pos	Part Number	Name	Remarks	Qty	Model	Pos	Part Number	Name	Remarks	Qty	Model
10	944 343 071 00	suspension strut mounting		2							
11	477 412 345	bearing flange		2							
12	N 012 228 3	spring washer		8							
13	N 011 008 8	hexagon nut		8							
(14)	133 412 367	sealing ring		2							
15	477 412 411	stop ring		2							
16	477 412 147	stop		2							
17	N 022 150 1	lock nut VM 14 X 1,5		2							
18	171 407 265	eccentric screw		2							
19	900 082 058 02	hexagon-head bolt M 12 X 1,5 X 50		2							
20	944 343 175 00	eccentric washer		2							
21	N 022 141 4	lock nut VM 12 X 1,5		4							
		- -- E N D -- -									

Model	Year	MG	SG	Illustration	Restrictions	Update				
924	79	4	02	402-05		187	11:01	06.04.2005	PORSCHE	PET	PORSCHE

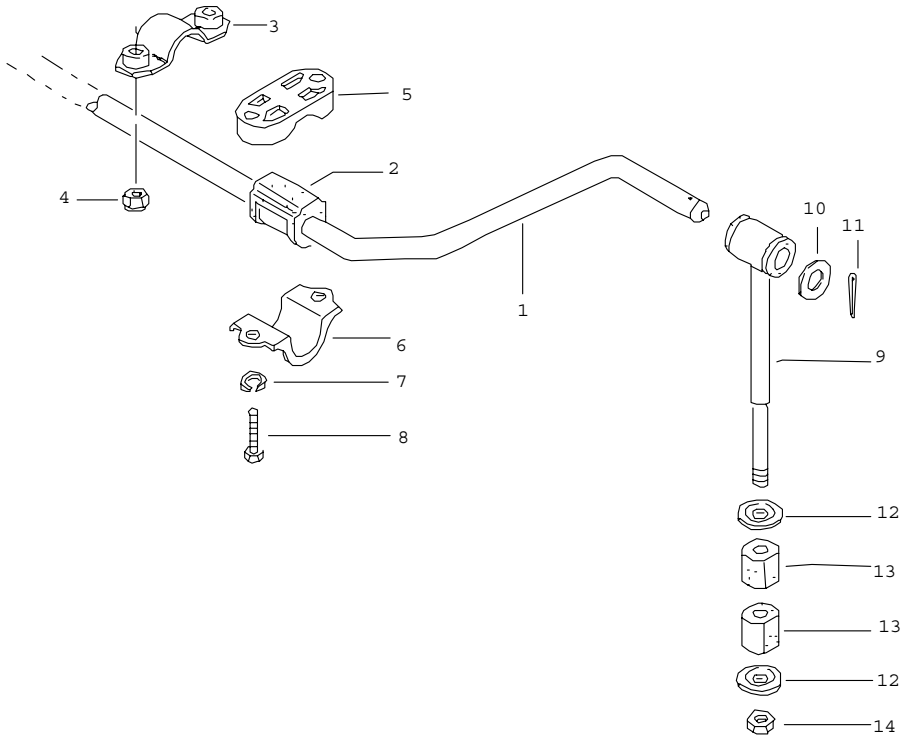

Pos	Part Number	Name	Remarks	Qty	Model
		stabiliser			
1	477 411 309 F	stabiliser 20 $	-77	1	
1	477 411 309 G	stabiliser 22 $	78	1	
1	477 411 309 L	stabiliser 23 $	79-	1	
2	477 411 313 C	stabiliser mounting 20 $	-77	2	
2	477 411 313 E	stabiliser mounting 22 $	78	2	
2	477 411 313 H	stabiliser mounting 23 $	79-	2	
3	477 411 023	intermediate piece	79-	2	
4	900 910 022 09	lock nut M 8	79-	4	
5	477 411 321 C	intermediate piece	-78	2	
6	133 411 333	clip	-78	2	
6	477 411 319	clip	79-	2	
7	900 027 015 02	lock ring B 8		4	
8	N 010 340 4	hexagon-head bolt M 8 X 40	-78	4	
9	E 477 411 057 F	push rod 20 $	-77	2	
9	477 411 057 G	push rod 22 $	78	2	
9	477 411 057 K	push rod 23 $	79-	2	
10	477 411 317 B	washer 23 $	79-	2	
11	N 012 536 1	cotter pin 4 X 30	79-	2	
12	477 411 043	concave washer for stabiliser mounting		4	
13	477 411 041 B	rubber mounting		4	

Pos	Part Number	Name	Remarks	Qty	Model	Pos	Part Number	Name	Remarks	Qty	Model
14	N 011 185 6	hexagon nut M 10		2							
		- -- E N D -- -									

Model	Year	MG	SG	Illustration	Restrictions	Update				
924	79	4	03	403-00		187	11:01	06.04.2005	PORSCHE	PET	PORSCHE

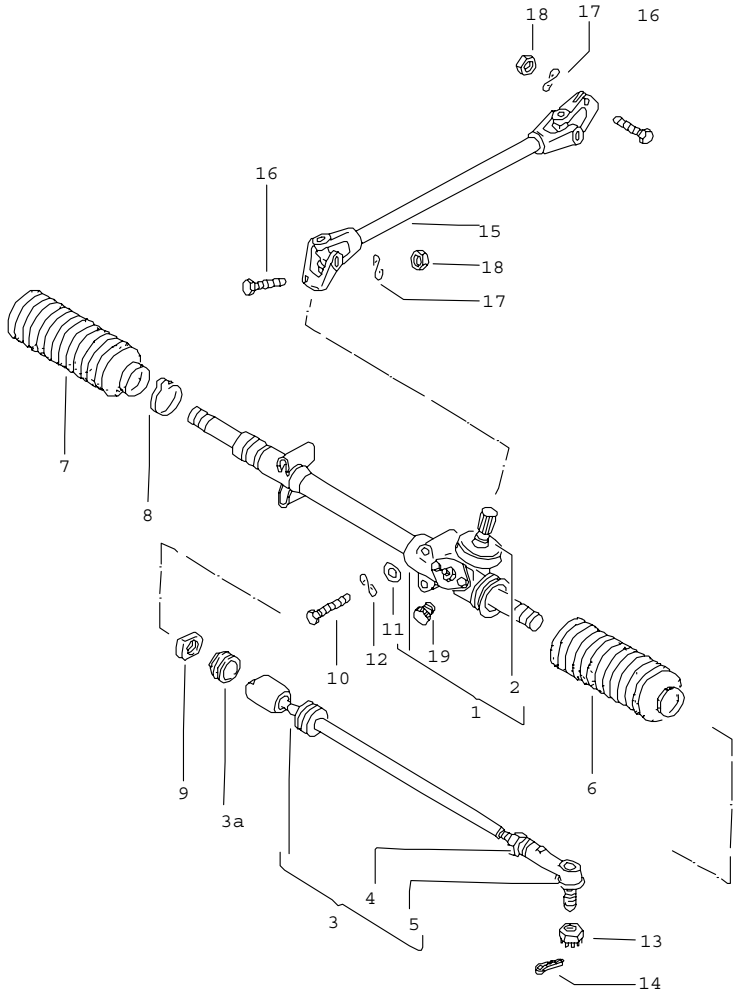

Pos	Part Number	Name	Remarks	Qty	Model
		steering gear tie rod			
1	477 419 061 C	steering gear	/LL	1	
(1)	478 419 061 A	steering gear	/RL	1	
2	477 419 321	cap		1	
3	477 419 803 B	tie rod use also:		2	
3A	477 419 827	stop ring		2	
4	900 078 005 01	hexagon nut M 14 X 1,5		2	
5	477 419 815	ball joint		2	
6	171 419 831 C	boot	/L	1	
7	171 419 832 C	bellows	/R	1	
8	823 419 843	terminal		1	
9	171 419 855	nut		2	
10	N 010 248 1	hexagon-head bolt M 8 X 60		4	
11	N 011 525 13	washer		2	
12	N 012 228 3	spring washer		4	
13	N 011 212 2	castle nut M 12 X 1,5		2	
14	N 012 532 1	cotter pin		2	
15	477 419 951 F	drive shaft	/LL	1	
(15)	478 419 951 C	drive shaft	/RL	1	
16	N 010 359 4	hexagon-head bolt M 8 X 38		2	
17	N 012 241 11	spring washer B 8 X 18		2	
18	900 910 022 09	lock nut		2	
19	477 419 115	plug		1	
		- -- E N D -- -			

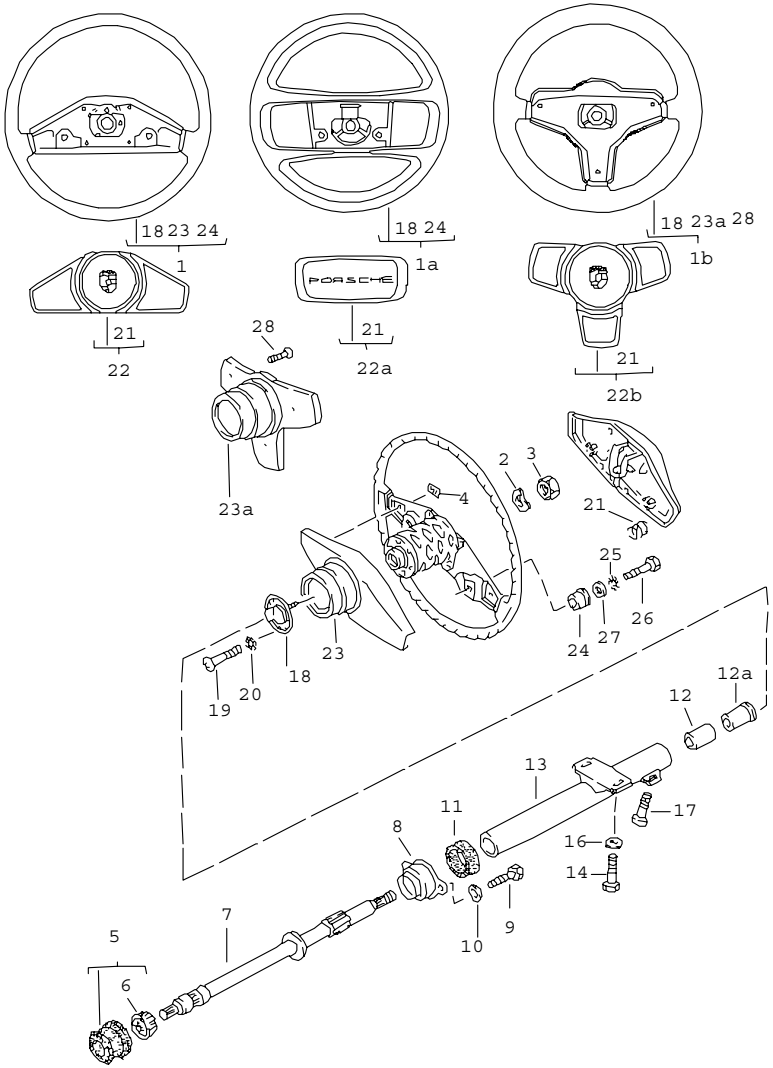

Pos	Part Number	Name	Remarks	Qty	Model
		steering wheel steering column			
1	477 419 091 M	steering wheel		1	924
1A	477 419 091 G	sports steering wheel 361 MM $		1	
1A	477 419 091 H	sports steering wheel leather 363 MM $		1	TURBO
	1AJ	black			
	3NG	brown			
1B	477 419 091 J	sports steering wheel leather 380 MM $		1	TURBO
	3NG	brown			
1B	477 419 091 K	sports steering wheel leather 380 MM $		1	TURBO
	1AJ	black			
	3NG	brown			
(1B)	477 419 091 L	sports steering wheel leather 380 MM $ with elevated hub		1	
	1AJ	black			
	3NG	brown			
2	N 012 238 5	spring washer		1	
3	900 078 006 01	hexagon nut M 16 X 1,5		1	
4	113 857 113	clamping washer 4 X 12		2	924
5	477 419 059	sealing ring		1	
6	113 415 511	needle-roller bearing		1	
7	477 419 505 J	steering column		1	
8	411 417 605	support ring		1	
9	999 072 005 09	hexagon-head bolt M 6 X 12		2	

Pos	Part Number	Name	Remarks	Qty	Model
10	211 805 243	spring washer		2	
11	411 417 613	rubber mounting		1	
12	171 419 549	clamping sleeve		1	
12A	171 419 341	support ring		1	
13	477 419 563 B	steering column tube		1	
14	411 417 549	shear bolt		2	
16	111 129 720	washer		2	
17	N 014 707 4	pan-head screw M 8 X 16		1	
18	113 415 660 A	slip ring		1	
19	900 146 029 02	oval-head screw AM 3,5 X 10		3	
20	N 012 131 2	shake-proof washer		3	
21	171 419 697	spring		3	
22	477 419 669	cap		1	924
22A	944 347 859 00	pad for horn		1	
	1DB	black			
	4RB	brown			
22B	911 347 859 00	cap		1	TURBO
	70B	black			
	40A	brown			
23	E 171 419 791 A	lining		1	924
23A	928 347 857 01	lining		1	TURBO
	70B	black			
	40A	brown			
24	321 419 779	insulating bush		3	
(24)	321 419 779 A	insulating bush for sports steering wheel 361 MM $		3	
25	900 114 014 01	shake-proof washer		3	
26	N 010 261 3	hexagon-head bolt M 4 X 16		3	
27	900 025 002 02	washer		2	
28	900 146 029 02	oval-head screw B 3,5 X 13		3	TURBO
		- -- E N D -- -			

Model	Year	MG	SG	Illustration	Restrictions	Update			
924	79	5	01	501-00		187	11:01	06.04.2005	PORSCHE PET PORSCHE

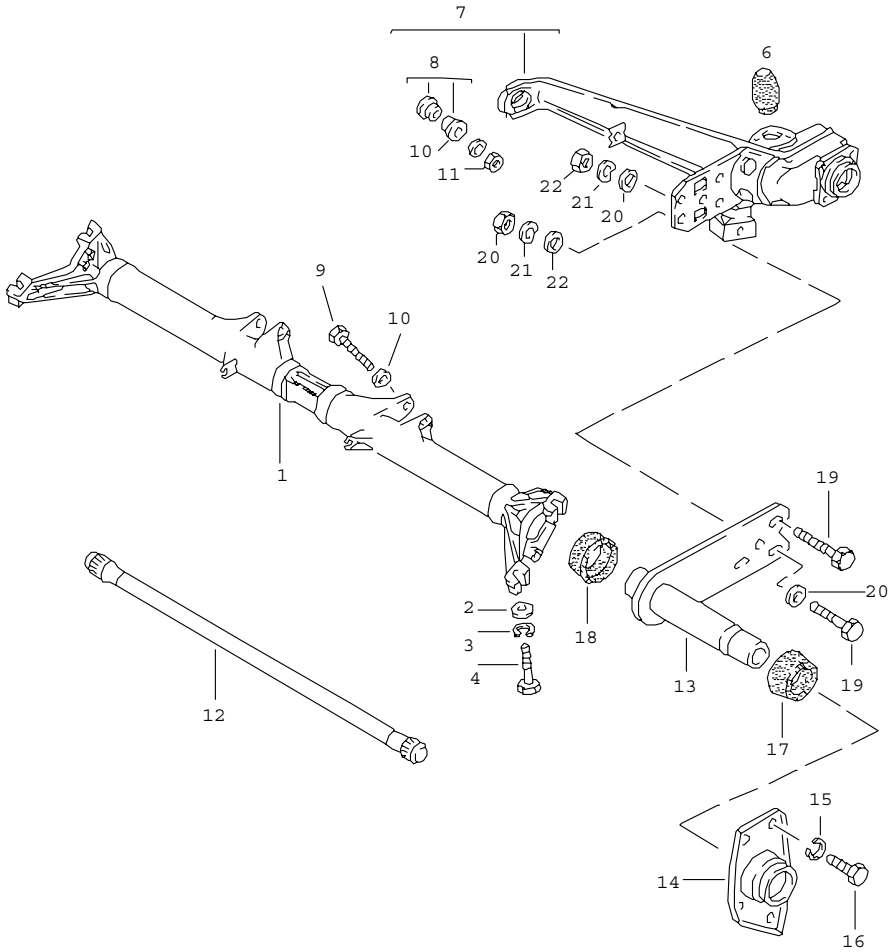

Pos	Part Number	Name	Remarks	Qty	Model
		rear axle carrier rear axle link			924
		F >>92481 00776 F >>92482 01225 F >>92483 30098			
1	477 500 053	rear axle carrier		1	
2	477 405 423	washer A 13		4	
3	N 012 042 4	lock ring		4	
4	N 010 154 3	hexagon-head bolt M 12 X 55		4	
6	311 501 191	rubber stop		2	
7	477 501 035 D	rear axle link	/L	1	
(7)	477 501 036 D	rear axle link	/R	1	
8	477 501 541	silentbloc		4	
9	N 010 190 4	hexagon-head bolt M 12 X 90		2	
10	803 199 347	washer		4	
11	N 022 141 4	lock nut M 12 X 1,5		2	
12	311 511 115 D	torsion bar 22 $	/L	1	
(12)	311 511 116 D	torsion bar 22 $	/R	1	
13	113 511 205 B	spring brace	/L	1	
(13)	113 511 206 B	spring brace	/R	1	
14	113 511 227 B	cover		2	
15	N 012 028 1	lock ring		8	
16	N 010 254 6	hexagon-head bolt M 10 X 22		8	
17	E 111 511 245 E	rubber mounting outer		2	
18	311 511 245	rubber mounting inner	/R	1	
(18)	E 311 511 246	rubber mounting inner	/L	1	

Pos	Part Number	Name	Remarks	Qty	Model	Pos	Part Number	Name	Remarks	Qty	Model
19	N 010 138 1	hexagon-head bolt M 12 X 1,5 X 38		6							
20	N 011 531 7	washer		12							
21	211 513 537	spring washer		6							
22	N 011 020 8	hexagon nut M 12 X 1,5		6							
		- -- E N D -- -									

Model	Year	MG	SG	Illustration	Restrictions	Update			
924	79	5	01	501-05		187	11:02	06.04.2005	PORSCHE PET PORSCHE

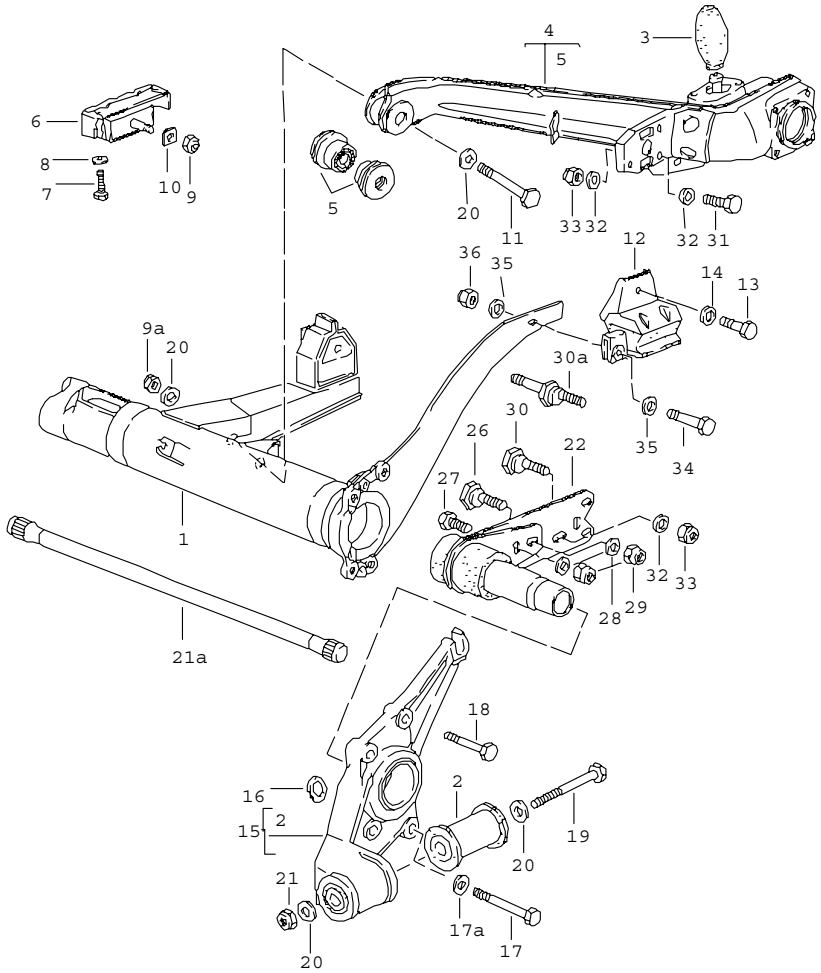

Pos	Part Number	Name	Remarks	Qty	Model
		rear axle carrier rear axle link F 92481 00777>> F 92482 01226>> F 92483 30099>>			
1	477 500 053 F	rear axle carrier 4-speed		1	924
(1)	E 477 500 053 E	rear axle carrier 5-speed		1	
2	477 501 069 A	rubber bush		2	
3	311 501 191	rubber stop		2	
4	477 501 035 D	rear axle link	/L	1	
(4)	477 501 036 D	rear axle link	/R	1	
5	477 501 541	silentbloc		4	
6	477 501 089	mounting		2	
7	900 075 043 02	hexagon-head bolt M 10 X 30		4	
8	900 025 008 09	washer		4	
9	N 022 149 2	lock nut		2	
9A	N 021 131 1	lock nut M 12 X 1,5		2	
10	477 501 697	washer		2	
11	N 010 190 4	hexagon-head bolt M 12 X 90		2	
12	944 331 075 00	supporting mount	/L	1	
(12)	944 331 076 00	supporting mount	/R	1	
13	900 075 040 02	hexagon-head bolt M 10 X 20		2	
14	N 012 230 6	spring washer		8	
15	944 331 059 00	bearing flange	/L	1	
(15)	944 331 060 00	bearing flange	/R	1	
16	477 501 667	washer		2	
17	N 010 465 5	hexagon-head bolt M 10 X 65		2	

Pos	Part Number	Name	Remarks	Qty	Model
17A	N 012 230 6	spring washer		8	
18	N 010 455 3	screw M 10 X 55		6	
19	900 082 059 02	hexagon-head bolt M 12 X 1,5 X 115		2	
20	803 199 347	washer		8	
21	N 022 141 4	lock nut VM 12 X 1,5		2	
21A	311 511 115 D	torsion bar 22 $	/L	1	924
(21A)	311 511 116 D	torsion bar 22 $	/R	1	924
(21A)	944 333 115 00	torsion bar 23,5 $ only together with stabiliser 14 $	/L	1	
(21A)	944 333 116 00	torsion bar 23,5 $ only together with stabiliser 14 $	/R	1	
22	477 511 201	strut	/L	1	
22	477 511 202	strut	/R	1	
26	911 333 303 00	eccentric screw		2	
27	911 333 305 00	hexagon-head bolt		2	
28	911 333 307 00	washer		4	
29	900 910 092 02	lock nut VM 16 X 1,5		4	
30	477 511 519	camber eccentric		2	924
30A	477 511 515	camber eccentric only together with stabiliser 14 $		2	
31	N 010 138 1	hexagon-head bolt M 12 X 1,5 X 38		4	
32	N 011 531 7	washer		8	
33	N 022 141 4	lock nut VM 12 X 1,5		4	
34	900 075 029 09	hexagon-head bolt M 8 X 25		2	
35	900 025 007 02	washer		4	
36	900 910 022 09	lock nut		2	

- -- E N D -- -

Model	Year	MG	SG	Illustration	Restrictions	Update				
924	79	5	01	501-10		187	11:02	06.04.2005	PORSCHE	PET	PORSCHE

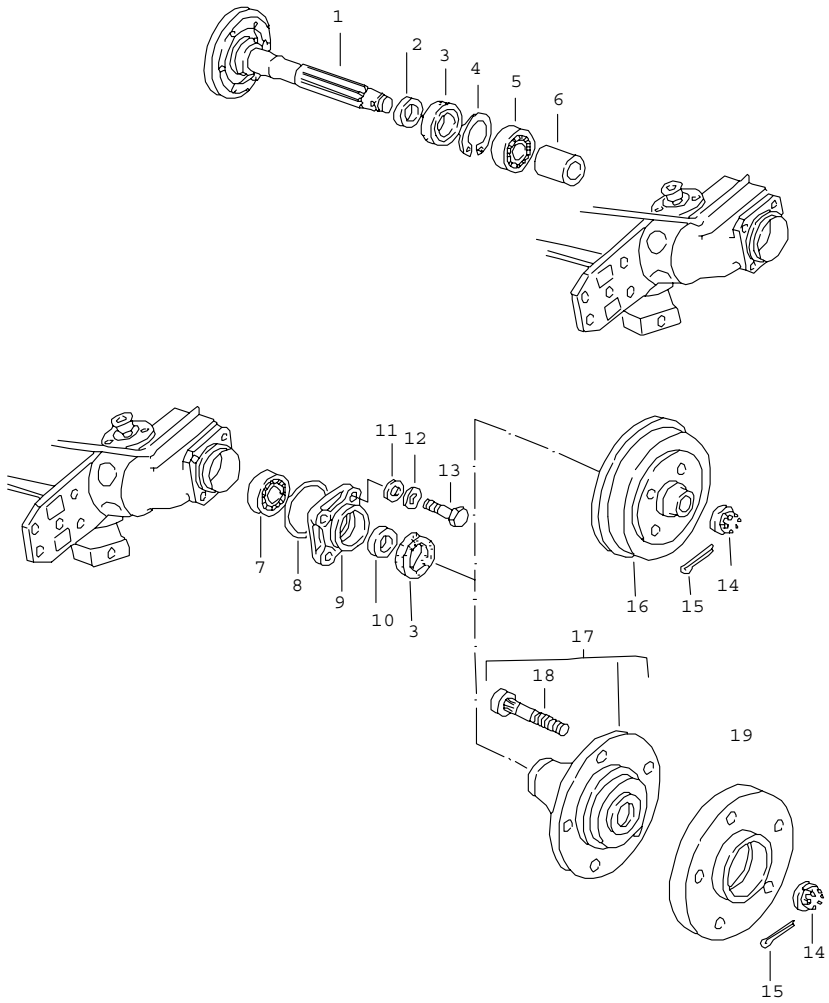

Pos	Part Number	Name	Remarks	Qty	Model
		rear wheel shaft			
1	477 501 263	rear wheel shaft		2	
2	113 501 305	spacer ring inner		2	
3	113 501 315 H	sealing ring		4	
4	N 012 319 1	circlip		2	
5	113 501 283	deep-groove ball bearing		2	
6	E 113 501 243	spacer tube		2	
7	E 113 501 277 A	cylindrical-roller bearing outer		2	
8	113 501 291 B	sealing ring		2	
9	113 501 311	cover		2	
10	E 113 501 303	spacer ring outer		2	
11	311 501 317	washer 10,2 X 18		8	
12	N 012 231 1	spring washer A 10		8	
13	311 501 325	hexagon-head bolt M 10 X 35		8	
14	311 501 221	castle nut		2	
15	900 021 025 02	cotter pin		2	
		brake drum			
16	477 501 615 A	brake drum		2	
		disc brake			
17	477 501 065	wheel hub		2	
18	911 331 671 00	wheel bolt		10	
19	477 501 701	spacer tube		2	
		- -- E N D -- -			

Model	Year	MG	SG	Illustration	Restrictions	Update			
924	79	5	01	501-15		187	11:02	06.04.2005	PORSCHE PET PORSCHE

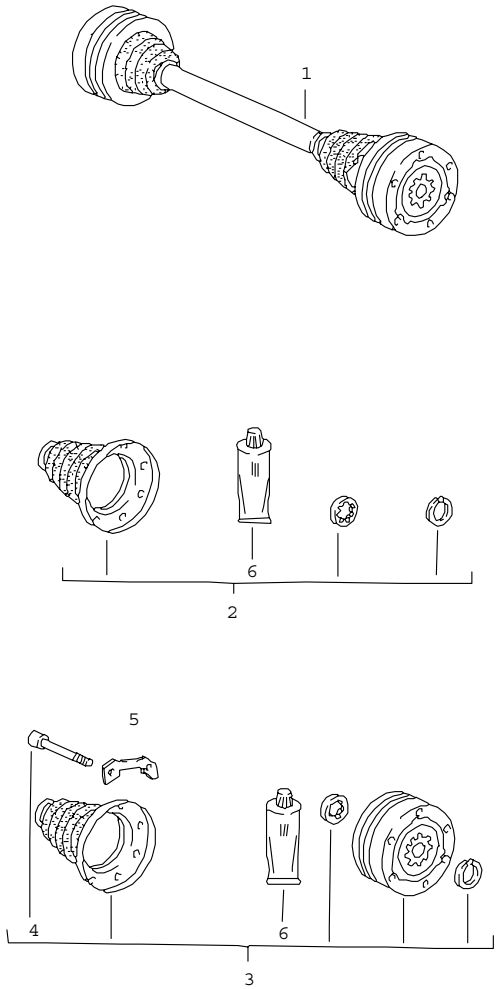

Pos	Part Number	Name	Remarks	Qty	Model
		drive shaft			
1	477 501 103	drive shaft		2	
1	477 501 101 A	drive shaft	/L	1	AUT.
1	E 477 501 102 A	drive shaft	/R	1	AUT.
2	944 331 903 00	repair kit dust bellows		4	
3	944 331 901 00	repair kit constant-velocity joint		4	
4	893 407 237	pan-head screw		12	
5	944 332 191 00	plate		6	
6	000 043 005 00	grease for drive shaft optimoly 1 90-g tube		X	
		- -- E N D -- -			

Model	Year	MG	SG	Illustration	Restrictions	Update				
924	79	5	02	502-00		187	11:02	06.04.2005	PORSCHE	PET	PORSCHE

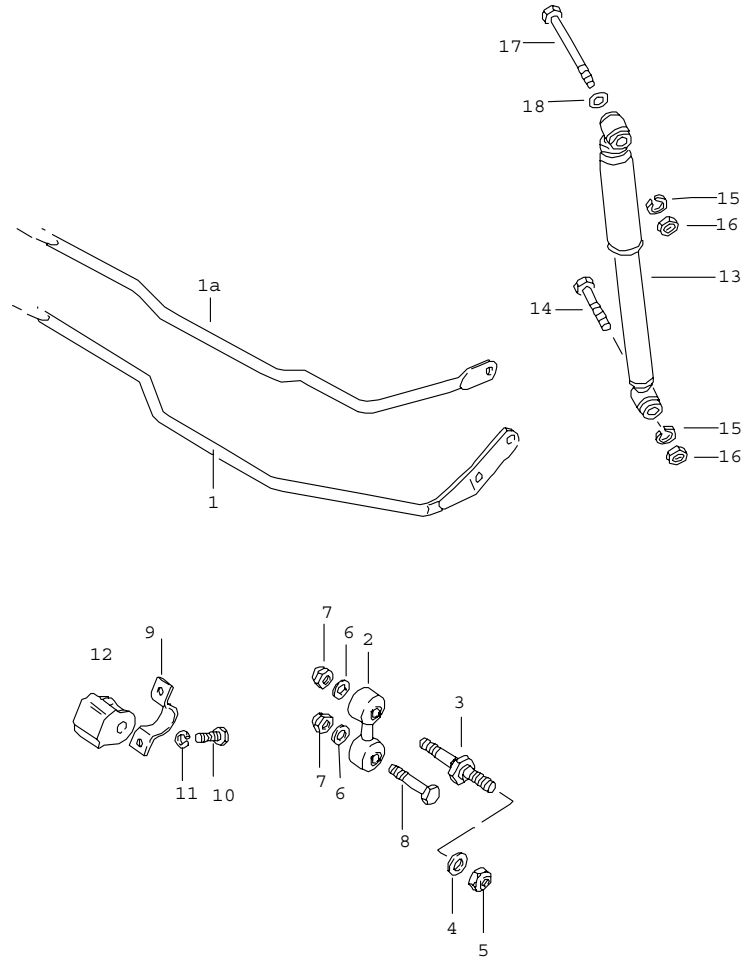

Pos	Part Number	Name	Remarks	Qty	Model
		stabiliser vibration damper			
1	477 511 409 B	stabiliser 18 $		1	924
1A	477 511 411 A	stabiliser 14 $ F 92481 00777>>		1	
2	477 511 051 A	stabiliser mounting		2	
3	477 511 515	camber eccentric		2	
4	N 011 531 7	washer		2	
5	N 022 141 4	lock nut M 12 X 1,5		2	
6	900 025 008 09	washer		4	
7	N 022 149 2	lock nut		4	
8	N 010 452 4	hexagon-head bolt M 10 X 52		2	
		mount cross tube			
9	113 411 333	retaining bow		2	
10	N 010 240 16	hexagon-head bolt M 8 X 20		4	
11	900 027 015 02	lock ring		4	
12	477 411 313 F	rubber mounting 14 $		2	
		vibration damper			
13	477 513 031 B	vibration damper F >>92481 00776 F >>92482 01225 F >>92483 30098		2	924
(13)	477 513 031 C	vibration damper - fichtel + sachs - F 92481 00777>> F 92482 01226>> F 92483 30099>>		2	924
(13)	477 513 031 E	vibration damper - koni - F 92481 00777>> F 92482 01226>> F 92483 30099>>		2	924

Pos	Part Number	Name	Remarks	Qty	Model
(13)	477 513 031 H	vibration damper - fichtel + sachs -		2	TURBO
(13)	944 333 031 00	vibration damper - koni -		2	TURBO
14	N 010 156 3	hexagon-head bolt M 12 X 1,5 X 70		2	
15	N 012 042 4	lock ring		4	
16	N 011 020 8	hexagon nut M 12 X 1,5		4	
17	900 082 059 02	hexagon-head bolt M 12 X 1,5 X 115		2	924
(17)	900 082 044 02	hexagon-head bolt M 12 X 1,5 X 125 F 92481 00777>> F 92482 01226>> F 92483 30099>>		2	
18	043 101 129	washer		2	
		- -- E N D -- -			

Model	Year	MG	SG	Illustration	Restrictions	Update				
924	79	6	01	601-00		187	11:03	06.04.2005	PORSCHE	PET	PORSCHE

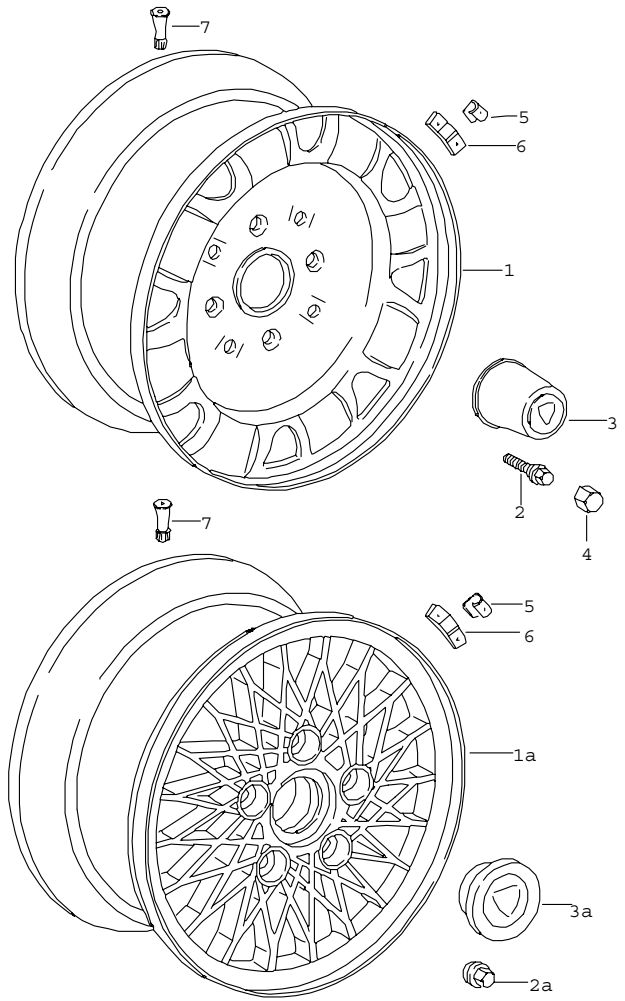

Pos	Part Number	Name	Remarks	Qty	Model
		disc wheel			
1	E 477 601 029 A	disc wheel 5 1/2 J X 14 steel 4- hole		5	924
(1)	477 601 030 A	disc wheel 5 1/2 J X 15 steel 5- hole for winter use		4	TURBO
(1)	477 601 031 B	disc wheel 6 J X 14 light alloy 4- hole		5	924
(1)	E 477 601 031 D	disc wheel 6 J X 14 light alloy black 4- hole		5	924
1A	477 601 025 B	cast spoked wheel		4	TURBO
2	431 601 139	screw M 14 X 1,5 X 25,5 for 477.601.029.A		16	924
(2)	477 601 139 B	wheel bolt M 14 X 1,5 X 25,5		16	924
-	477 601 041	lock for cast alumin. alloy wheels 477.601.031.B/D		1	
2A	999 182 003 36	wheel nut		20	TURBO
(2A)	N 020 112 1	ball seat nut for steel wheel		20	
3	477 601 151 E	hub cap for steel wheel 4- hole		4	924

Pos	Part Number	Name	Remarks	Qty	Model
-	901 361 031 01	hub cap for steel wheel 5- hole		4	
(3)	477 601 151 N	hub cap alloy wheel		4	924
3A	928 361 032 01	hub cap		4	TURBO
4	321 601 173	cap		16	
5	914 361 441 00	retainer spring		X	
6	928 361 410 00	balance weight 10 G		X	
(6)	928 361 411 00	balance weight 20 G		X	
(6)	928 361 412 00	balance weight 30 G		X	
(6)	928 361 413 00	balance weight 40 G		X	
(6)	928 361 414 00	balance weight 50 G		X	
(6)	928 361 415 00	balance weight 60 G		X	
(6)	928 361 416 00	balance weight 70 G		X	
(6)	928 361 417 00	balance weight 80 G		X	
(6)	901 361 410 00	balance stick-on weight 10 G		X	924
(6)	901 361 411 00	balance stick-on weight 20 G		X	924
(6)	901 361 412 00	balance stick-on weight 30 G		X	924
(6)	901 361 413 00	balance stick-on weight 40 G		X	924
7	900 265 001 50	rubber valve 15,2 MM $		5	

Pos	Part Number	Name	Remarks	Qty	Model
-	477 601 011	emergency wheel 5 1/2 J X 14 4- hole with collapsible tire B 78-14 SST		1	924
-	E 477 601 015 A	emergency wheel 5 1/2 J X 15 5- hole with collapsible tire 165/15		1	TURBO
-	911 361 510 02	small electric compressor		1	
-	911 722 201 02	tyre pressure gauge		1	
-	914 722 104 10	winged screw M 10 X 55		1	
-	914 722 104 10	winged screw M 10 X 75		1	
-	477 813 157	washer		1	
-	477 813 191	support		1	
-	E N 010 251 2	hexagon-head bolt M 10 X 18		1	
-	900 027 016 02	lock ring		1	
		- -- E N D -- -			

Model	Year	MG	SG	Illustration	Restrictions	Update				
924	79	6	02	602-00		187	11:03	06.04.2005	PORSCHE	PET	PORSCHE

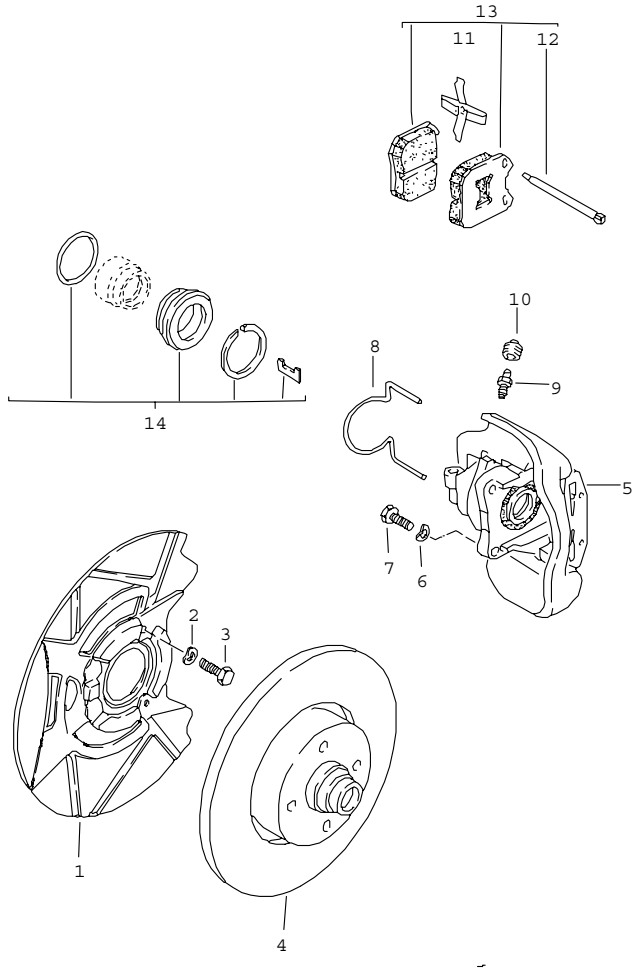

Pos	Part Number	Name	Remarks	Qty	Model
		disc brake front axle			924
1	477 407 165 B	cover plate	-78	2	
1	E 477 407 165 E	cover plate	79-	2	
2	N 012 234 5	spring washer B 7		6	
3	N 010 226 2	hexagon-head bolt M 7 X 10		6	
4	477 405 583 B	brake disc		2	
5	E 477 615 107	floating calliper	/L	1	
(5)	477 615 108	floating calliper	/R	1	
6	900 028 014 02	spring washer B 12		4	
7	N 010 137 1	hexagon-head bolt M 12 X 1,5 X 35		4	
8	803 615 169	guide spring	/L	1	
(8)	E 803 615 170	guide spring	/R	1	
9	113 615 273 A	ventilation valve		2	
10	211 611 483	dust boot		2	
11	803 615 269 C	expanding spring		2	
12	803 615 261 B	retaining pin		4	
13	477 698 151 A	set of brake pads		1	
-	928 352 951 02	set of brake pads		1	
-	928 352 951 02	set of brake pads without asbestos		1	
-	477 698 163	parts set		1	
14	E 803 698 471 C	set of seals		2	
		- -- E N D -- -			

Model	Year	MG	SG	Illustration	Restrictions	Update	11:03	06.04.2005	PORSCHE PET PORSCHE
924	79	6	02	602-05		187			

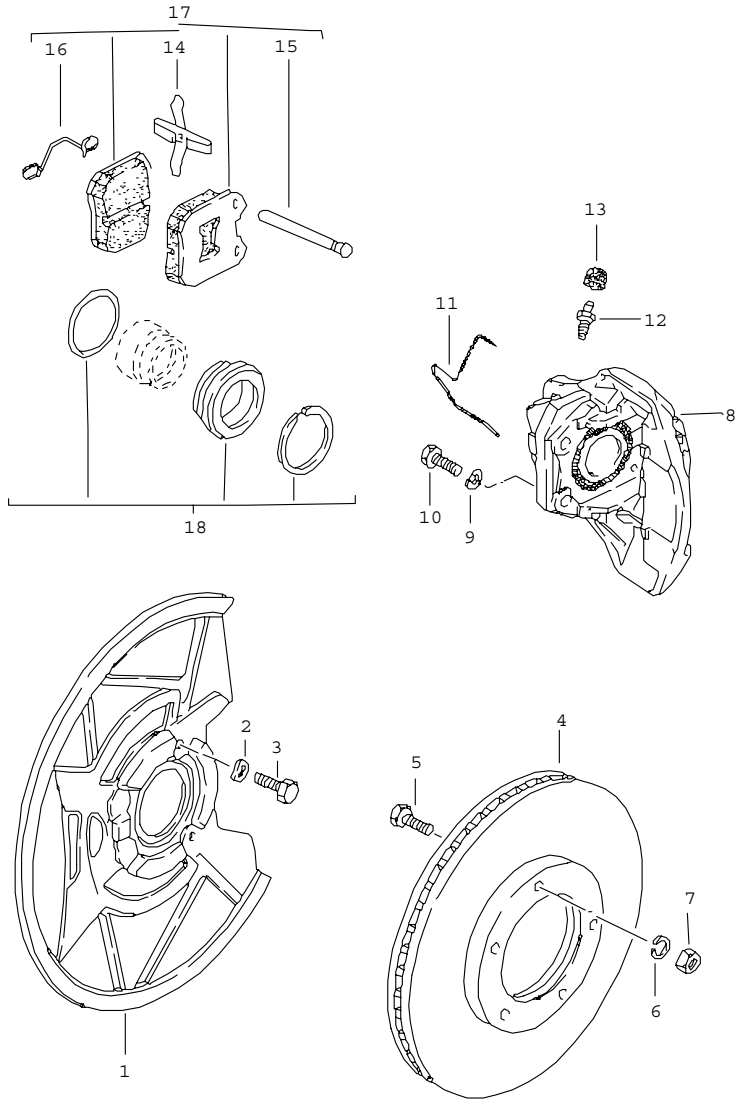

Pos	Part Number	Name	Remarks	Qty	Model
		disc brake front axle			924,M 471 TURBO
1	477 407 165 F	cover plate		2	
2	N 012 234 5	spring washer B 7		6	
3	N 010 226 2	hexagon-head bolt M 7 X 10		6	
4	477 405 083 A	brake disc		2	
5	900 075 079 02	hexagon-head bolt M 8 X 22		10	
6	N 012 241 1	spring washer B 8		10	
7	900 076 025 02	hexagon nut M 8		10	
8	E 477 615 109	floating calliper	/L	1	
(8)	E 477 615 110	floating calliper	/R	1	
9	900 028 014 02	spring washer B 12		4	
10	N 040 108 1	hexagon-head bolt M 12 X 1,5 X 40		4	
11	431 615 169	guide spring		2	
12	928 351 945 00	ventilation valve		2	
13	211 611 483	dust boot		2	
14	* 928 351 935 00	expanding spring		2	
15	* 928 351 936 00	retaining pin		4	
16	* 477 615 112	retaining spring		2	
17	A 477 698 155	set of brake pads		1	
-	944 351 951 02	set of brake pads		1	
-	944 351 951 02	set of brake pads without asbestos		1	
-	944 351 952 01	mounting parts		1	
18	* 928 351 941 00	set of seals		2	
		- -- E N D -- -			

Model	Year	MG	SG	Illustration	Restrictions	Update			
924	79	6	03	603-00		187	11:03	06.04.2005	PORSCHE PET PORSCHE

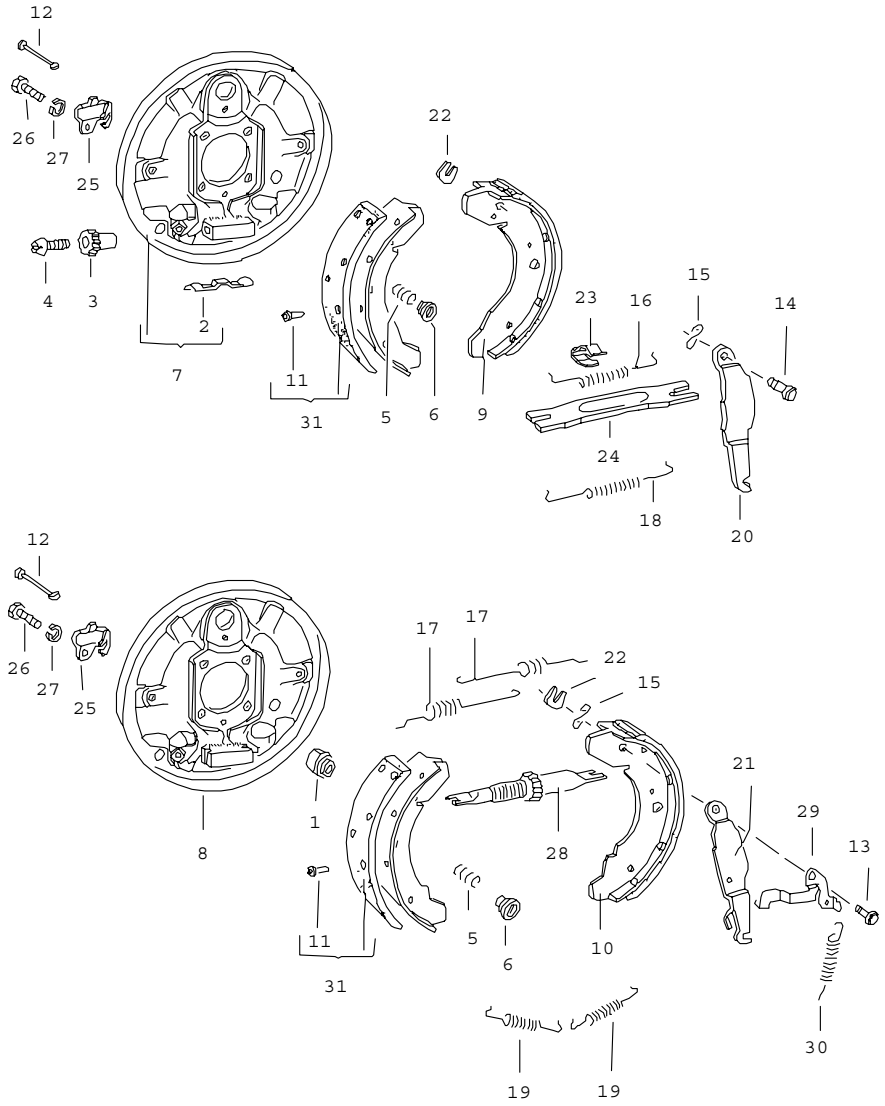

Pos	Part Number	Name	Remarks	Qty	Model
		brake rear axle			924
1	113 609 163	plug		8	
2	211 609 185 A	leaf spring for adjusting nut		2	
3	113 609 205 A	adjusting nut		4	
4	131 609 209	adjusting screw		4	
5	251 609 283	spring		4	
6	251 609 289	concave washer		4	
7	E 113 609 439 E	calliper carrier	/L	1	
(7)	113 609 440 E	calliper carrier	/R	1	
8	E 481 609 439 A	calliper carrier	/L	1	(S)
(8)	E 481 609 440 A	calliper carrier	/R	1	(S)
9	477 609 537 D	brake shoe 40 with pad		4	
9	477 609 537 D	brake shoe 40 with pad without asbestos		4	
10	477 609 537 E	brake shoe 40 with pad		4	(S)
10	477 609 537 E	brake shoe 40 with pad without asbestos		4	(S)
11	N 013 633 1	rivet C 4 X 7,5		36	
12	171 609 579 B	roll pin 37		4	
13	113 609 601 A	pin for lever		2	(S)
14	211 609 601 B	pin for lever		2	

Pos	Part Number	Name	Remarks	Qty	Model
15	N 012 228 3	spring washer B 8		2	
16	E 113 609 605 A	return spring upper		2	
17	113 609 605 D	return spring upper		4	(S)
18	113 609 309 B	return spring lower		2	
19	311 609 609	return spring lower		4	(S)
20	E 113 609 613 A	lever	/L	1	
(20)	E 113 609 614 A	lever	/R	1	
21	113 609 613 C	lever	/L	1	(S)
(21)	113 609 614 C	lever	/R	1	(S)
22	211 609 619	safety clip for pin		2	
23	113 609 625	clamp for push rod		2	
24	E 113 609 631 A	push rod		2	
25	E 113 609 637	support for parking-brake cable	/L	1	
(25)	E 113 609 638	support for parking-brake cable	/R	1	
26	900 075 087 02	hexagon-head bolt M 8 X 15		2	
27	900 027 015 02	lock ring B 8		2	
28	113 609 801 A	push rod	/L	1	(S)
(28)	113 609 802 A	push rod	/R	1	(S)
29	E 113 609 853	adjusting lever	/L	1	(S)
(29)	113 609 854	adjusting lever	/R	1	(S)
30	113 609 859	spring for brake lever		2	(S)

Pos	Part Number	Name	Remarks	Qty	Model
31	A 477 698 075 A	set of brake pads - jurid -		1	
31	477 698 075 A	set of brake pads - energit - without asbestos		1	
(31)	A 477 698 076 A	set of brake pads - jurid - oversize 0,50 mm		1	
(31)	477 698 076 A	set of brake pads - energit - without asbestos oversize 0,50 mm		1	
		brake drum see group 5/01/10			
		- -- E N D -- -			

Model	Year	MG	SG	Illustration	Restrictions	Update			
924	79	6	03	603-05		187	11:04	06.04.2005	PORSCHE PET PORSCHE

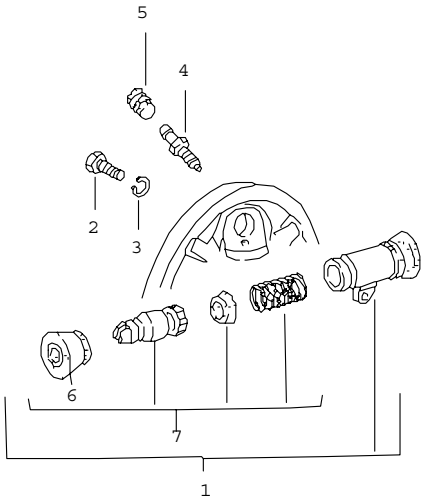

Pos	Part Number	Name	Remarks	Qty	Model
		brake rear wheel brake cylinder			924
1	477 611 055 E	wheel brake cylinder 19,05		2	
2	900 075 087 02	hexagon-head bolt M 8 X 15		2	
3	900 027 015 02	lock ring		2	
4	211 611 477 A	bleeder valve		2	
5	211 611 483	dust boot		2	
6	113 611 695 D	protection cap		2	
7	* 477 698 051	repair kit wheel brake cylinder 19,05		2	
		- -- E N D -- -			

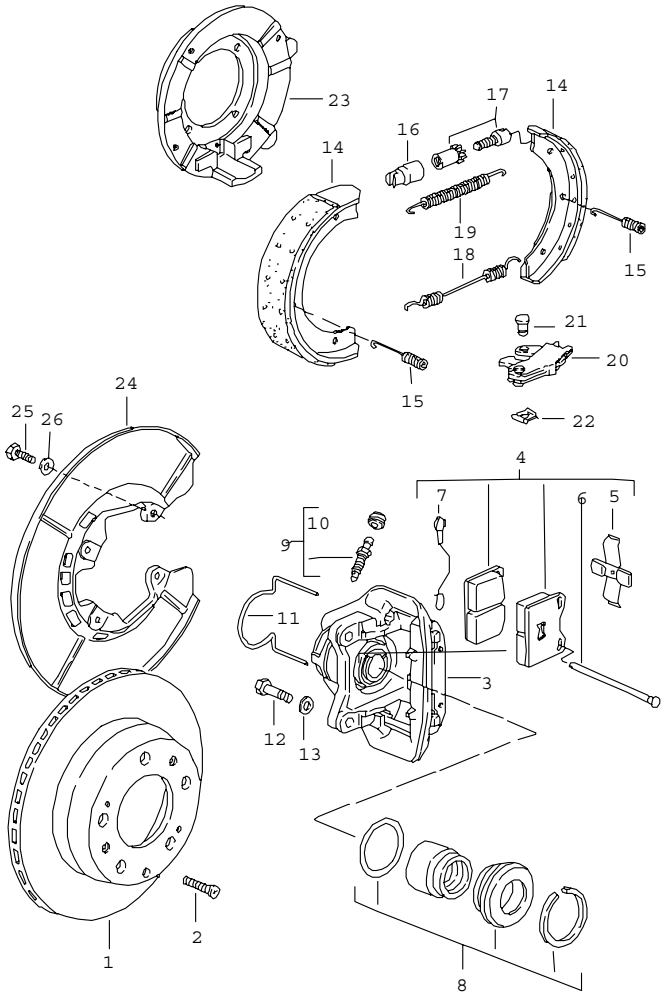

Pos	Part Number	Name	Remarks	Qty	Model
		disc brake rear axle			TURBO
1	944 352 041 02	brake disc		2	
2	N 033 167 1	countersunk-head screw M 6 X 12		4	
3	944 352 429 00	floating calliper without pad	/L	1	
(3)	944 352 430 00	floating calliper without pad	/R	1	
4	A 477 698 157	set of brake pads		1	
(4)	944 352 951 02	set of brake pads		1	
(4)	944 352 951 02	set of brake pads without asbestos		1	
-	944 352 952 00	mounting parts		1	
5	* 928 352 935 00	expanding spring		2	
6	* 928 351 936 00	retaining pin		4	
7	E 928 352 937 00	retaining spring		2	
8	* 928 352 941 00	set of seals		2	
9	901 352 977 10	ventilation valve		2	
10	901 351 927 10	dust boot		2	
11	928 352 939 00	guide spring	/L	1	
(11)	928 352 940 00	guide spring	/R	1	
12	N 010 137 1	hexagon-head bolt M 12 X 1,5		4	
13	N 012 232 1	spring washer		4	
		handbrake			
14	996 352 993 00	repair kit without asbestos		4	
15	928 352 957 02	compression spring		4	
16	911 352 944 00	bush		2	
17	911 352 098 00	adjusting screw		2	
18	901 352 954 10	return spring		2	
19	901 352 932 10	return spring		2	

Pos	Part Number	Name	Remarks	Qty	Model	Pos	Part Number	Name	Remarks	Qty	Model
20	951 352 090 00	expanding bow		2							
21	477 609 459	bolt		2							
22	N 900 588 01	lock		2							
23	477 609 111	calliper carrier	/L	1							
23	477 609 426 A	calliper carrier	/R	1							
24	937 352 801 00	protective plate		2							
25	N 010 210 13	hexagon-head bolt M 6 X 10		8							
26	N 012 226 5	spring washer		8							
		- -- E N D -- -									

Model	Year	MG	SG	Illustration	Restrictions	Update	11:04	06.04.2005	PORSCHE PET PORSCHE
924	79	6	04	604-00		187			

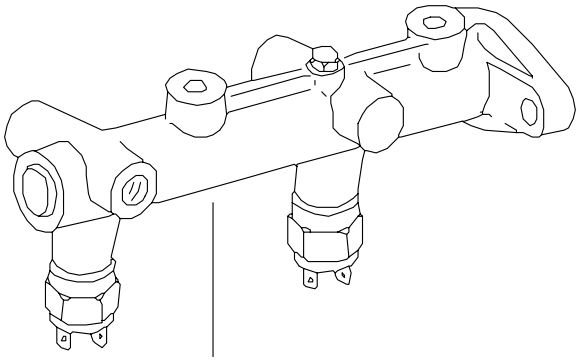

Pos	Part Number	Name	Remarks	Qty	Model
		brake master cylinder			
1	477 611 015 A	brake master cylinder with stop light switch 20.64 (TEVES)		1	924
(1)	928 355 011 04	brake master cylinder		1	TURBO, 924,M 471
-	E 803 611 245	stop screw		1	
-	N 013 804 2	sealing ring		1	
-	* 477 611 015 A	brake master cylinder for brake master cylinder 477.611.015.A		1	924
		stop light switch see group 9/06/00			
		- -- E N D -- -			

Model	Year	MG	SG	Illustration	Restrictions	Update				
924	79	6	04	604-05		187	11:04	06.04.2005	PORSCHE	PET	PORSCHE

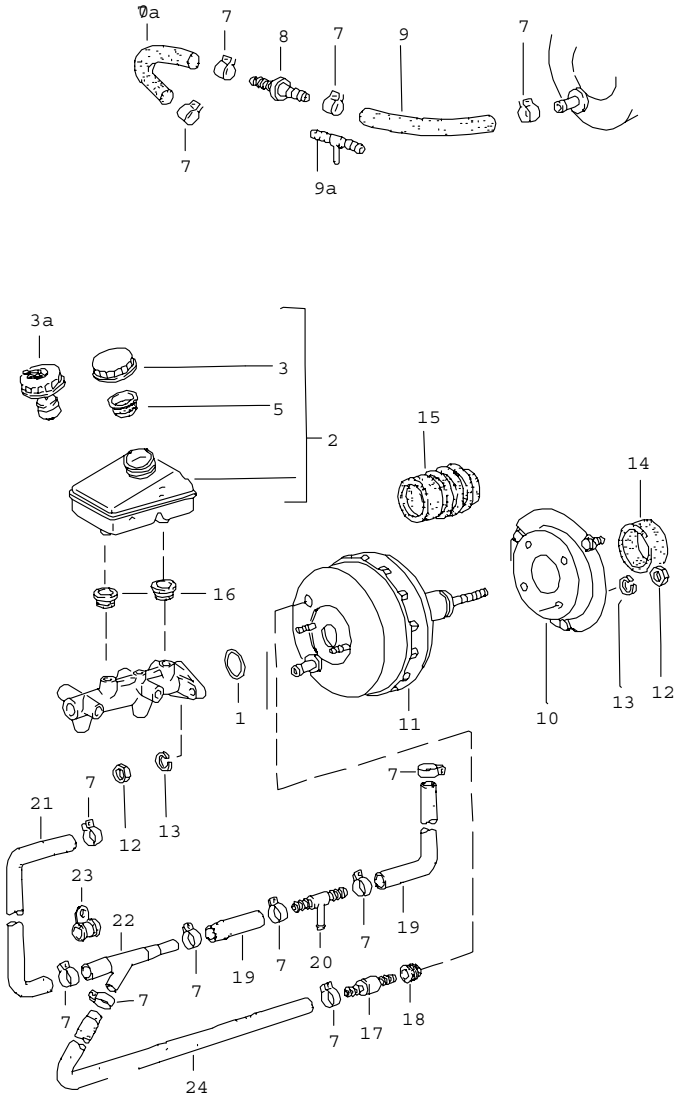

Pos	Part Number	Name	Remarks	Qty	Model
		expansion tank brake booster			
1	251 611 243	sealing ring		1	
2	477 611 301 B	expansion tank		1	924
(2)	477 611 301 C	expansion tank		1	924,M 592
(2)	477 611 303	expansion tank		1	TURBO
3	477 611 361	cover		1	
3A	477 611 351	cover with float		1	M 592
5	211 611 381 B	strainer		1	
(5)	E 477 611 385	strainer		1	M 592
7	N 024 510 1	hose clamp		8	
7A	477 611 909	elbow		1	924
8	E 803 611 933	check valve		1	924
9	823 611 939 B	vacuum hose 600 MM		1	924
9A	321 611 813	t-socket		1	924,(S)
10	E 477 611 945	intermediate piece		1	924
(10)	477 611 945 D	intermediate piece		1	TURBO
-	477 611 951	gasket for intermediate piece		1	924
11	477 612 107 B	brake booster (TEVES)		1	924
(11)	477 612 107 G	brake booster (SCHAEFER)		1	924
(11)	928 355 023 04	brake booster (TEVES)		1	TURBO
12	N 011 008 8	hexagon nut		9	
13	900 027 015 02	lock ring		9	
14	E 823 611 969 A	sealing ring for bracket		1	924
14	477 611 969 D	gasket		1	TURBO

Model	Year	MG	SG	Illustration	Restrictions	Update			
924	79	6	04	604-05		187	11:04	06.04.2005	PORSCHE PET PORSCHE

Pos	Part Number	Name	Remarks	Qty	Model
15	477 611 115	bellows (TEVES)		1	924
(15)	E 477 611 115 A	bellows (SCHAEFER)		1	924
(15)	477 611 115	bellows		1	TURBO
16	211 611 817 A	plug		2	924
(16)	911 355 922 00	plug		2	TURBO
17	431 611 933	check valve		1	
18	911 355 921 00	rubber seal		1	
19	999 181 022 51	hose		*	
20	321 611 813	t-socket		1	
21	477 612 147 A	vacuum hose		1	
22	035 133 753 A	venturi tube		1	
23	N 020 607 1	clamp		1	
24	477 612 149	elbow		1	
		- -- E N D -- -			

Pos	Part Number	Name	Remarks	Qty	Model

Model	Year	MG	SG	Illustration	Restrictions	Update	11:05	06.04.2005	PORSCHE PET PORSCHE
924	79	6	04	604-10		187			

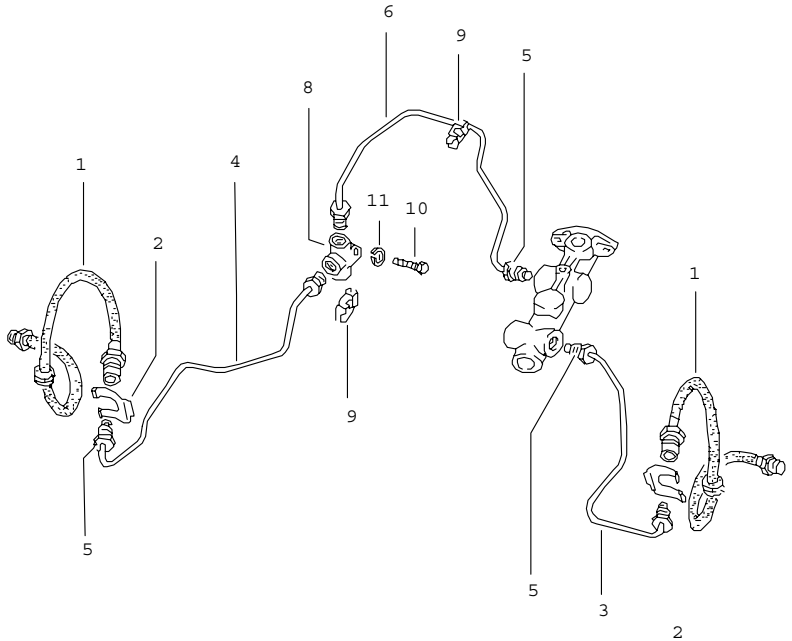

Pos	Part Number	Name	Remarks	Qty	Model
		brake lines front			
1	477 611 071 A	brake hose		2	
(1)	477 611 071 B	brake hose		2	TURBO
2	113 611 715 A	hose holder		2	
3	E 477 611 723	brake line	/L	1	924
(3)	477 611 723 A	brake line	/L	1	TURBO
4	E 477 611 724	brake line F >>92481 09474	/R	1	
(4)	477 611 724 A	brake line F 92491 00051>>	/R	1	
6	477 611 739	brake line F >>92481 09474		1	
(6)	E 477 611 739 C	brake line F 92491 00051>>		1	924
(6)	477 611 739 B	brake line		1	TURBO
8	113 611 755	distributing piece		1	
9	477 611 767 B	cable clip		2	
10	900 075 016 02	hexagon-head bolt M 6 X 22		1	
11	N 012 226 5	spring washer		1	
		- -- E N D -- -			

Model	Year	MG	SG	Illustration	Restrictions	Update	11:05	06.04.2005	PORSCHE	PET	PORSCHE
924	79	6	04	604-15		187					

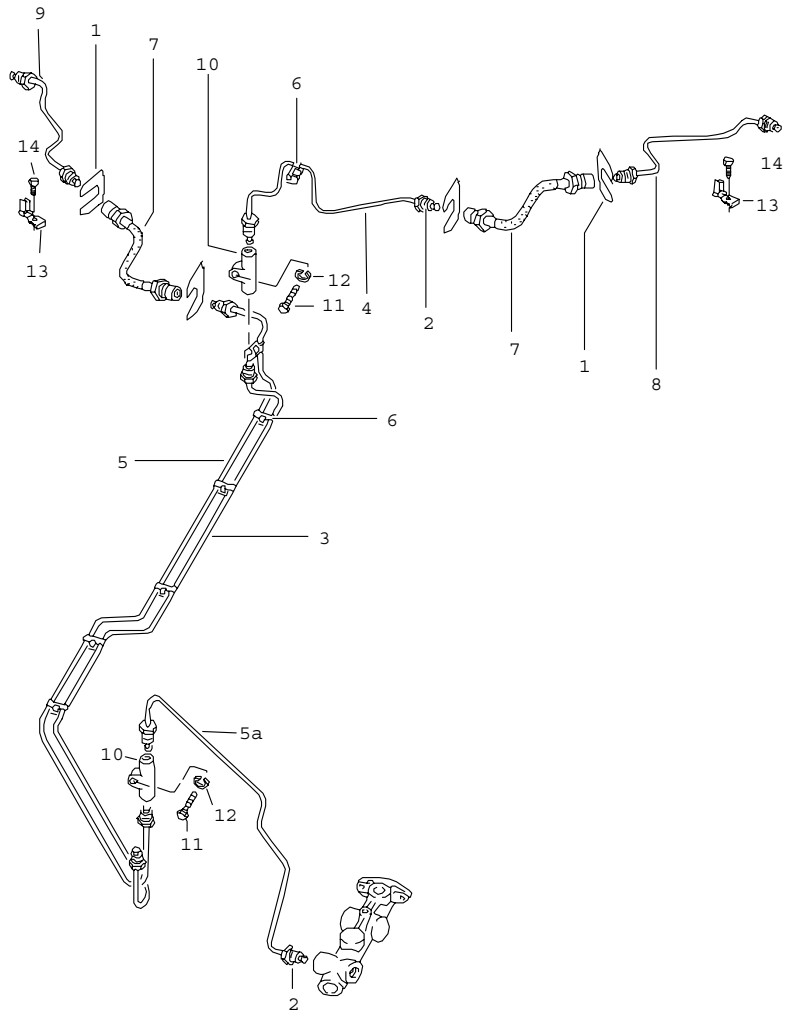

Pos	Part Number	Name	Remarks	Qty	Model
		brake lines rear			
1	113 611 715 A	brake hose bracket		4	
3	477 611 741	brake line F >>92481 00776	/L	1	
(3)	477 611 741 A	brake line F 92481 00777>>>>92481 09474		1	924
(3)	477 611 741 B	brake line F 92491 00051>>		1	
4	E 477 611 745	brake line F >>92481 00776	/L	1	
(4)	477 611 745 A	brake line F 92481 00777>>	/L	1	
5	E 477 611 746	brake line F >>92481 00776		1	
(5)	477 611 746 A	brake line F 92481 00777>>>>92481 09474		1	924
(5)	477 611 746 B	brake line F 92491 00051>>		1	
5A	477 611 744 A	brake line F >>92481 09474		1	924
(5A)	477 611 744 B	brake line F 92491 00051>>		1	
6	477 611 767 B	cable clip		14	
7	477 611 775	brake hose		2	
8	477 611 781	brake line F >>92481 00776	/L	1	924
8	477 611 781	brake line F 92481 00777>>	/L	1	924
8	E 477 611 781 A	brake line	/L	1	TURBO
9	E 477 611 782	brake line F >>92481 00776	/R	1	924
9	E 477 611 782	brake line F 92481 00777>>	/R	1	924
9	477 611 782 A	brake line	/R	1	TURBO
10	113 611 791	connecting piece		2	

Pos	Part Number	Name	Remarks	Qty	Model
11	900 075 016 02	hexagon-head bolt M 6 X 22		1	
12	N 012 226 5	spring washer		1	
13	477 611 783	support		2	TURBO
14	N 010 210 13	hexagon-head bolt		2	TURBO
		- -- E N D -- -			

Pos	Part Number	Name	Remarks	Qty	Model

Model	Year	MG	SG	Illustration	Restrictions	Update		
924	79	6	98	REP		187	8:45	12.04.2005

Pos	Part Number	Name	Remarks	Qty	Model
		repair kits			
>>	> 477 698 075 A	set of brake pads - jurid - comprising: brake pad	/H	1 4	924
-	N 013 633 1	rivet C 4 X 7,5		45	
>>	> 477 698 075 A	set of brake pads - energit - without asbestos comprising: brake pad	/H	1 4	
-	N 013 633 1	rivet C 4 X 7,5		45	
>>	> 477 698 076 A	set of brake pads - jurid - oversize 0,50 mm comprising: brake pad 40	/H	1 4	924
-	N 013 633 1	rivet C 4 X 7,5		45	
>>	> 477 698 076 A	set of brake pads - energit - without asbestos oversize 0,50 mm comprising: brake pad	/H	1 4	924
-	N 013 633 1	rivet C 4 X 7,5		45	
>>	> 477 698 151 A	set of brake pads for floating calliper comprising: brake pad	/V	1 4	924
-	803 615 269 C	expanding spring		2	
-	803 615 261 B	retaining pin		4	
>>	> 803 698 471 C	set of seals for floating calliper comprising: sealing ring circlip slide protection cap	/V	2 1 1 2 1	924

Model	Year	MG	SG	Illustration	Restrictions	Update		
924	79	6	98	REP		187	8:45	12.04.2005

Pos	Part Number	Name	Remarks	Qty	Model
>>	> 477 698 051	repair kit for wheel brake cylinder 19.05 comprising: spring filler piece boot piston	/H	2 1 2 2 2	924
-	113 611 695 D	protection cap		2	
>>	> 171 698 181 H	repair kit for brake master cylinder 20.64 (TEVES)		1	924
>>	> 477 698 155	set of brake pads (JURID 209, 380) comprising: brake pad	/V	1 4	TURBO 924,M 471
-	928 351 935 00	expanding spring		2	
-	928 351 936 00	retaining pin		4	
-	901 351 955 10	safety seal		4	
>>	> 944 351 951 02	set of brake pads comprising: brake pad (JURID 209*-238)	/V	1 4	TURBO 924,M 471
>>	> 944 351 951 02	set of brake pads without asbestos comprising: brake pad (TEXTAR T400)	/V	1 4	TURBO 924,M 471
>>	> 944 351 952 01	mounting parts comprising: expanding spring retaining pin retaining spring safety seal	/V	1 2 4 2 4	TURBO 924,M 471
>>	> 928 351 941 00	set of seals for floating calliper comprising: gasket protection cap clamping ring	/V	2 1 1 1	TURBO 924,M 471
>>	> 477 698 157	set of brake pads (JURID 231) comprising: brake pad	/H	1 4	TURBO 924,M 471
-	928 352 935 00	expanding spring		2	

Model	Year	MG	SG	Illustration	Restrictions	Update		
924	79	6	98	REP		187	8:45	12.04.2005

Pos	Part Number	Name	Remarks	Qty	Model
-	928 351 936 00	retaining pin		4	
-	E 928 352 937 00	retaining spring		2	
>>	> 944 352 951 02	set of brake pads comprising: brake pad (JURID 231-223)	/H	1 4	TURBO 924,M 471
>>	> 944 352 951 02	set of brake pads without asbestos comprising: brake pad (TEXTAR T426)	/H	1 4	TURBO 924,M 471
>>	> 944 352 952 00	mounting parts comprising: expanding spring retaining pin retaining spring safety seal	/H	1 2 4 2 4	TURBO
>>	> 928 352 941 00	set of seals floating calliper comprising: gasket protection cap circlip slide	/H	2 1 1 1 2	TURBO
>>	> 928 355 913 00	repair kit for brake master cylinder 23,81 MM		1	TURBO 924,M 471
		- -- E N D -- -			

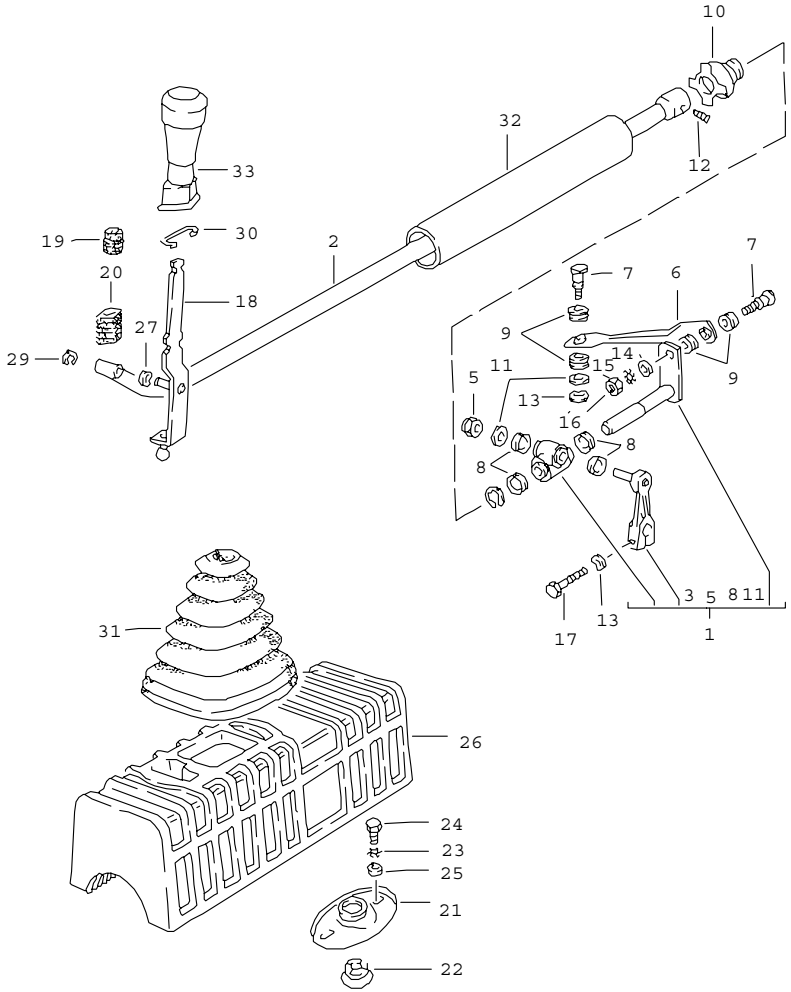

Pos	Part Number	Name	Remarks	Qty	Model
		shift mechanism manual transmission			924
1	477 711 103 B	intermediate shift lever		1	
2	477 711 107 B	gear shift rod		1	
(2)	944 424 019 00	gear shift rod use also: 477.711.125.B		1	
-	477 711 103 C	intermediate shift lever		1	
3	N 012 415 1	circlip		1	
5	803 253 111	lock nut		1	
6	944 424 141 00	joint rod		1	
7	477 711 147 A	ball pin		2	
8	477 711 149	sealing ring		4	
9	477 711 155 A	sealing ring		4	
10	477 711 159 A	bellows		1	
11	311 827 181	washer		2	
12	823 711 833	hexagon-head bolt		1	
13	N 012 241 11	spring washer		1	
14	N 011 525 13	washer		1	
15	N 012 108 2	serrated lock washer		1	
16	N 011 008 8	hexagon nut		1	
17	N 010 233 6	hexagon-head bolt M 8 X 28		1	
18	477 711 205 D	gearshift lever		1	
19	477 711 217	vibration damper		1	
20	477 711 219	vibration damper		1	
21	944 424 229 00	bearing bracket		1	
22	944 424 231 01	bearing shell		1	
23	N 012 108 2	serrated lock washer		2	
24	N 010 237 6	hexagon-head bolt M 8 X 12		2	
25	N 011 525 13	washer		2	

Pos	Part Number	Name	Remarks	Qty	Model
26	477 711 239	sound absorber		1	
27	900 028 005 02	spring washer		1	
29	N 012 437 1	lock washer		1	
30	477 711 269	retainer spring		1	
31	477 711 271 A	bellows		1	
32	477 711 285	protective tube		1	
33	E 477 711 289	knob 4-speed		1	
		- -- E N D -- -			

Model	Year	MG	SG	Illustration	Restrictions	Update				
924	79	7	01	701-01		187	11:05	06.04.2005	PORSCHE	PET	PORSCHE

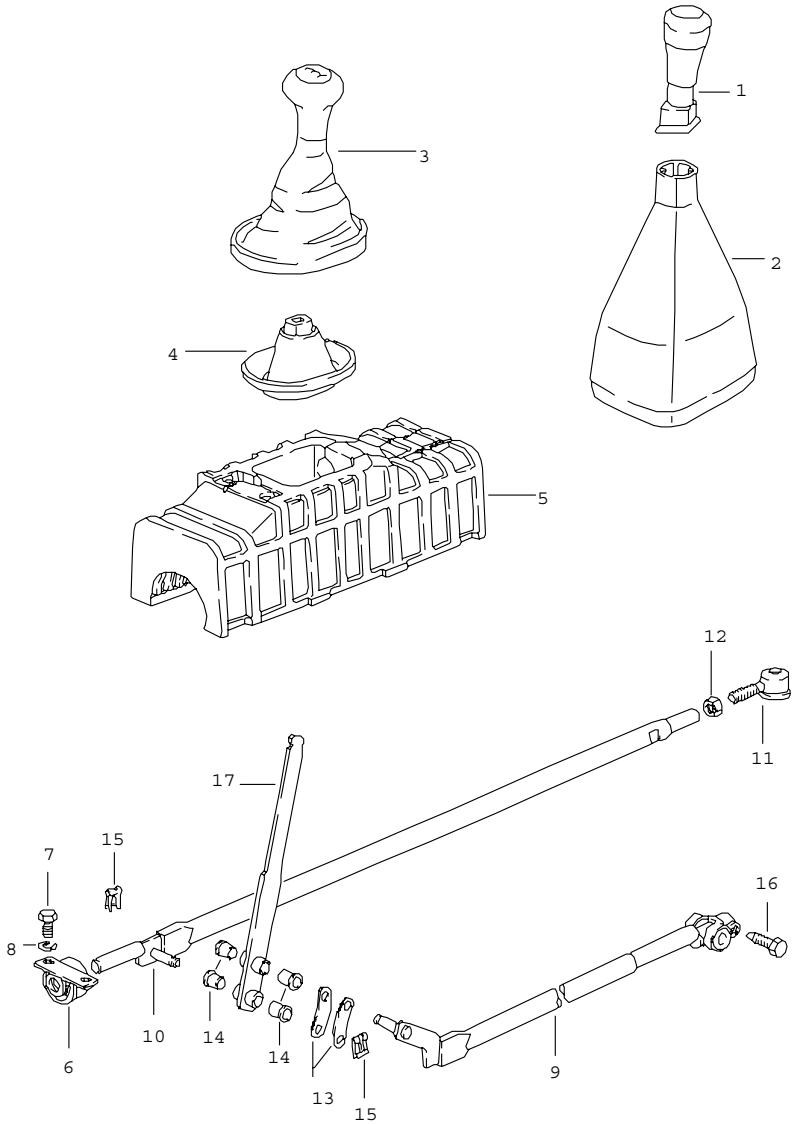

Pos	Part Number	Name	Remarks	Qty	Model
		shift mechanism manual transmission			924,M 481 TURBO
1	928 424 105 06	gearshift knob		1	
2	E 477 711 251 B	boot		1	
3	928 424 073 01	gearshift knob with boot		1	
	1AJ	black			
	3NG	brown			
4	477 711 270	inner sleeve		1	
5	E 477 711 240	insulation		1	
6	477 711 237 A	bearing bracket		1	
7	N 010 210 13	hexagon-head bolt M 6 X 10		2	
8	N 012 226 5	spring washer A 6		2	
9	477 711 106	gear shift rod		1	
10	477 711 154	guiding rod		1	
11	477 711 176 A	angular joint		1	
12	900 034 003 02	hexagon nut BM 10		1	
13	477 711 216	leaf spring		2	
14	999 924 002 40	bush		4	
15	999 166 034 02	sl-lock		2	
16	901 424 229 00	conical screw		1	
17	477 711 206 B	gearshift lever		1	
		- -- E N D -- -			

Model	Year	MG	SG	Illustration	Restrictions	Update				
924	79	7	01	701-05		187	11:05	06.04.2005	PORSCHE	PET	PORSCHE

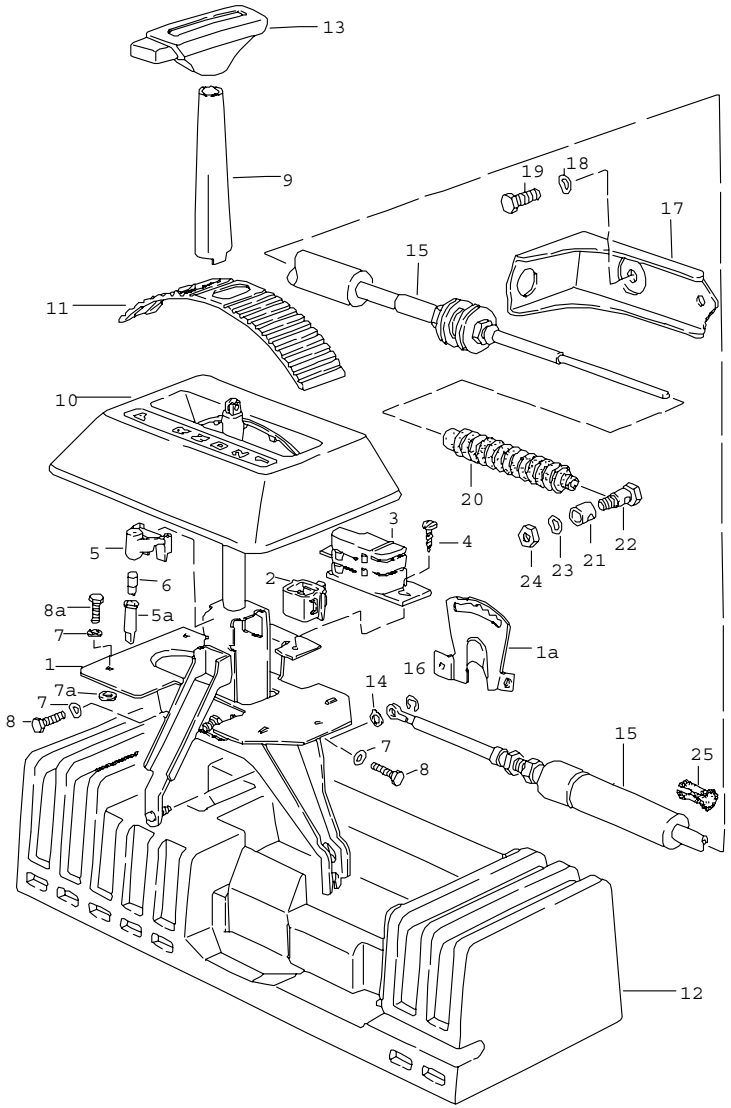

Pos	Part Number	Name	Remarks	Qty	Model
		shift mechanism automatic transmission			924
1	477 713 025 A	shift mechanism		1	
1A	944 426 109 01	locking segment		1	
2	171 927 145 A	contacts		1	
3	311 927 147 B	support for contact		1	
4	N 013 968 1	tapping screw B 4,8 X 13		2	
5	321 713 855 A	bulb holder		1	
5A	111 919 243	bulb holder		1	
6	900 631 132 90	bulb		1	
7	N 012 226 5	spring washer		5	
7A	N 900 067 01	washer		3	
8	N 010 215 13	hexagon-head bolt M 6 X 15		2	
8A	N 010 217 9	hexagon-head bolt M 6 X 20		3	
9	477 713 279	cover		1	
10	477 713 111	cover		1	
	01C	black			
	90V	brown	-77		
	89S	cadbury brown	77-		
11	477 713 277	cover strip		1	
12	A 477 713 115	sound absorber use		1	
(12)	944 426 182 01	sound absorber it is necessary to rework		1	
(12)	944 426 181 00	sound absorber it is necessary to rework		1	
13	321 713 139	selector knob		1	
	899	black			
14	E 473 867 471	sealing ring		1	
15	477 713 265 A	cable		1	

Pos	Part Number	Name	Remarks	Qty	Model
16	N 012 325 1	lock washer		1	
17	477 713 281 A	retaining bracket		1	
18	N 012 038 1	lock ring		2	
19	N 010 240 16	hexagon-head bolt M 8 X 20		2	
20	311 713 269 A	bellows		1	
21	311 713 291 A	clamping bush		1	
22	E 311 713 293	clamping bolt		1	
23	N 012 241 11	spring washer B 8 X 15		1	
24	N 011 118 14	hexagon nut		1	
25	431 609 781	breather hose		2	
		- -- E N D -- -			

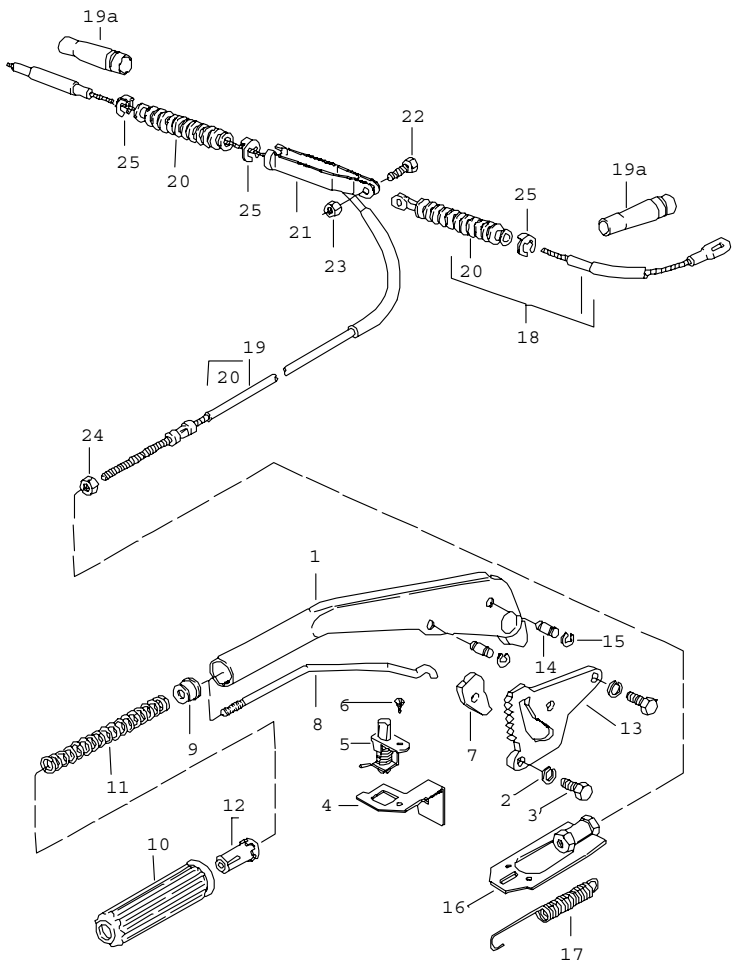

Pos	Part Number	Name	Remarks	Qty	Model
		parking-brake lever			
1	477 711 305 B	parking-brake lever		1	924
(1)	477 711 305 A	parking-brake lever		1	TURBO
2	900 027 015 02	lock ring		2	
3	N 010 239 11	hexagon-head bolt M 8 X 18		2	
4	477 711 317	support	/LL	1	
(4)	E 478 711 318	support	/RL	1	
5	968 613 601 00	contact switch		1	
6	N 013 957 5	tapping screw B 3,5 X 9,5		1	
7	823 711 321	pawl		1	
8	481 711 325	rod		1	
9	481 711 327	spring sleeve		1	
10	839 711 327	grip		1	
	01C	black			
11	191 711 329	spring		1	
12	113 711 333 B	push button		1	
13	477 711 339 B	tooth sector		1	924
(13)	944 424 252 00	tooth sector		1	TURBO
14	251 711 341 A	pin		2	
15	N 012 437 1	lock washer		4	
16	477 711 973	connecting piece		1	
17	477 711 975	return spring		1	
18	477 609 719	parking-brake cable 995 MM		1	924
19	477 609 720	parking-brake cable 2035 MM		1	924
18	477 609 719 C	parking-brake cable		1	TURBO
19	477 609 720 C	parking-brake cable		1	TURBO
19A	477 609 723	guide tube		1	TURBO

Pos	Part Number	Name	Remarks	Qty	Model	Pos	Part Number	Name	Remarks	Qty	Model
-	N 020 906 3	tie-wrap 6,5 X 450		2							
21	477 711 965	compensating bow		1							
22	N 010 217 9	hexagon-head bolt M 6 X 20		1							
23	900 910 012 02	lock nut		1							
24	900 076 010 02	hexagon nut		1							
25	N 012 328 1	lock		1							
-	999 513 025 40	tie-wrap		2							
		- -- E N D -- -									

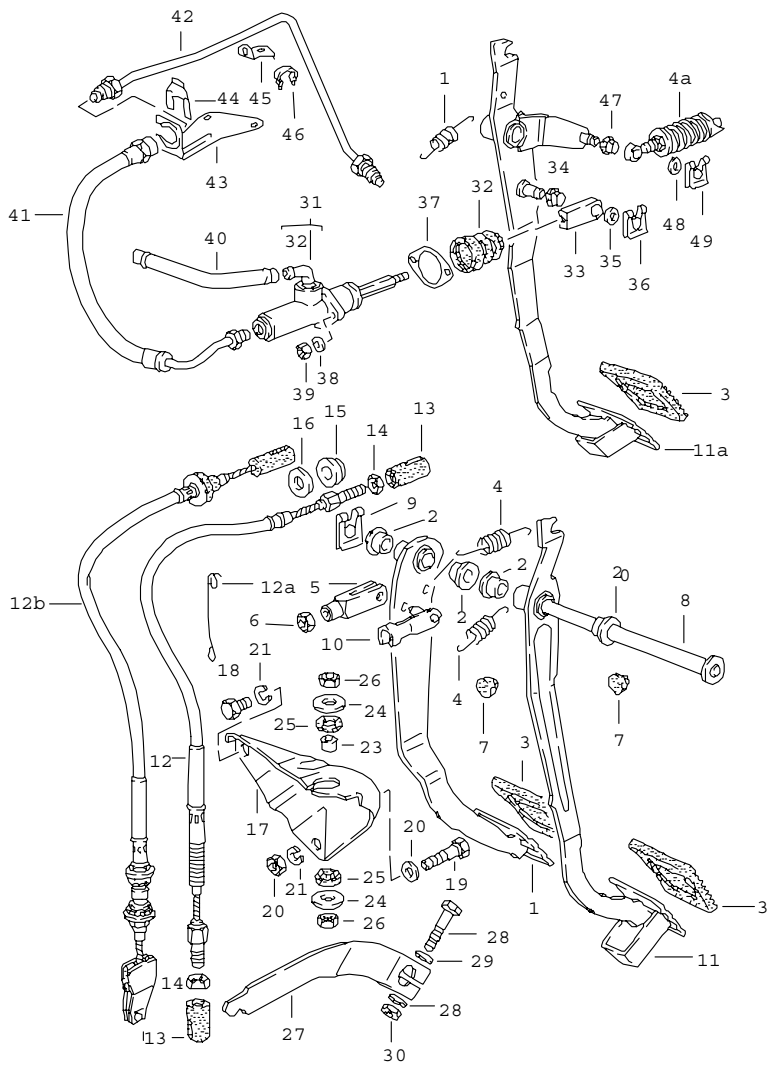

Pos	Part Number	Name	Remarks	Qty	Model
		pedals brake clutch left-hand drive			
1	E 823 721 141	brake pedal F >>92481 00776		1	
(1)	477 721 141	brake pedal F 92481 00777>>		1	
(1)	477 723 141	brake pedal		1	AUT.
2	443 721 153 A	bearing sleeve		4	
3	823 721 173	cap		2	
(3)	827 723 173	cap		1	AUT.
4	321 721 191	return spring		2	
4A	477 721 353 A	clutch power spring		1	TURBO
5	803 721 213	clevis		1	
6	N 011 010 6	hexagon nut		1	
7	999 703 183 40	buffer		2	
8	843 721 309	bolt		1	
(8)	N 023 151 2	bolt		1	AUT.
9	N 012 653 1	lock		1	
10	N 023 476 1	bolt		1	
11	477 721 315	clutch pedal F >>92481 00776		1	
(11)	477 721 315 A	clutch pedal F 92481 00777>>		1	924
11A	477 721 315 D	clutch pedal		1	TURBO
12	803 721 335 A	clutch cable F >>92491 03260		1	
12B	477 721 333 B	clutch cable F 92491 03261>>		1	924
12A	477 721 391	retainer spring		1	924
13	E 803 721 339	threaded eye	-10/78	2	
14	900 076 010 02	hexagon nut	-10/78	2	
15	803 721 393	bush	-10/78	1	

Model	Year	MG	SG	Illustration	Restrictions	Update				
924	79	7	02	702-00		187	11:06	06.04.2005	PORSCHE	PET	PORSCHE

Pos	Part Number	Name	Remarks	Qty	Model
16	803 721 397	washer 10,4 X 38 X 2,5	-10/78	1	
17	477 721 399 A	support		1	924
18	N 034 879 4	hexagon-head bolt M 12 X 22		1	924
19	N 010 476 3	screw M 12 X 75		1	924
20	N 011 531 7	washer		1	
21	N 012 042 4	lock ring		2	
22	N 011 030 4	hexagon nut		1	
23	803 721 341	spacer tube	-10/78	1	
24	803 721 369	washer	-10/78	2	
25	803 721 389	bush	-10/78	2	
26	N 021 281 1	lock nut	-10/78	2	
27	019 141 719	clutch release lever		1	
28	N 040 262 2	hexagon-head bolt M 8 X 50		1	
29	N 015 401 4	washer		2	
30	N 011 008 8	hexagon nut		1	
		actuator hydraulic			
31	477 721 171	clutch master cylinder complete		1	
32	928 423 908 00	bellows		1	
33	928 423 517 00	clevis		1	
34	999 924 002 40	bush		1	
35	900 025 008 09	washer		1	
36	999 166 034 02	sl-lock		1	
37	928 423 191 00	gasket		1	
38	900 027 015 02	lock ring		2	
39	900 076 025 02	hexagon nut		3	
-	999 181 021 50	hose 12,5 X 7,5		*	

Pos	Part Number	Name	Remarks	Qty	Model
40	-	220 MM		1	
41	477 721 189 A	clutch hose		1	
42	477 721 185	clutch pipeline		1	
43	477 721 191	support clutch hose		1	
44	928 423 183 01	hose holder		1	
45	477 721 195	retaining bracket		1	
46	181 971 847	cable clip		1	
47	999 924 001 40	bush		1	
48	N 011 525 13	washer		1	
49	N 900 470 01	lock washer		1	
		- -- E N D -- -			

Model	Year	MG	SG	Illustration	Restrictions	Update				
924	79	7	02	702-05		187	11:06	06.04.2005	PORSCHE	PET	PORSCHE

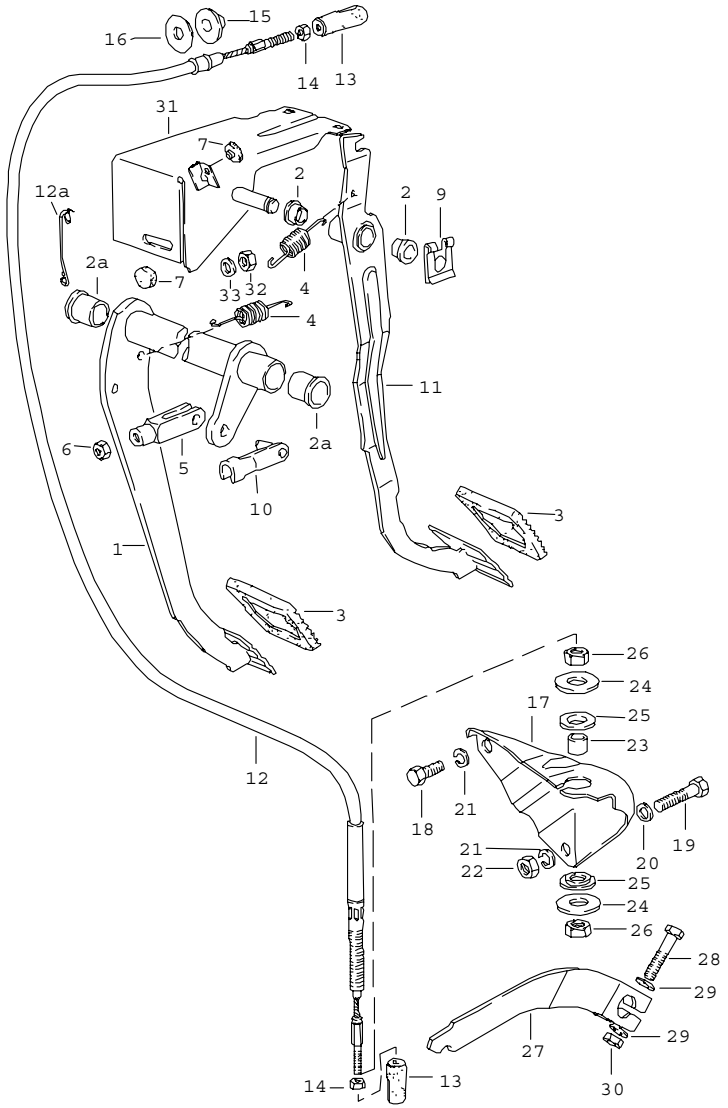

Pos	Part Number	Name	Remarks	Qty	Model
		pedals brake clutch right-hand drive			
1	E 478 721 141	brake pedal		1	
(1)	478 723 141	brake pedal		1	AUT.
2	443 721 153 A	bearing sleeve		2	
2A	478 721 153	bearing sleeve		2	
3	823 721 173	cap		2	
(3)	827 723 173	cap		1	AUT.
4	321 721 191	return spring		2	
5	803 721 213	clevis		1	
6	N 011 010 6	hexagon nut		1	
7	999 703 183 40	buffer		2	
9A	N 012 653 1	lock		1	
10	N 023 476 1	bolt		1	
11	478 721 315	clutch pedal		1	
12	478 721 335 A	cooling water tube		1	
12A	477 721 391	retainer spring		1	
13	E 803 721 339	threaded eye		2	
14	900 076 010 02	hexagon nut		2	
15	803 721 393	bush		1	
16	803 721 397	washer 10,4 X 38 X 2,5		1	
17	477 721 399 A	support		1	
18	N 034 879 4	hexagon-head bolt M 12 X 22		1	
19	N 010 476 3	screw M 12 X 75		1	
20	N 011 531 7	washer		1	
21	N 012 042 4	lock ring		2	
22	N 011 030 4	hexagon nut		1	

Pos	Part Number	Name	Remarks	Qty	Model
23	803 721 341	spacer tube		1	
24	803 721 369	washer		2	
25	803 721 389	bush		2	
26	N 021 281 1	lock nut		2	
27	019 141 719	clutch release lever		1	
28	N 040 262 2	hexagon-head bolt M 8 X 50		1	
29	N 015 401 4	washer		2	
30	N 011 008 8	hexagon nut		1	
31	478 721 113 A	bracket		1	
32	900 076 025 02	hexagon nut		3	
33	N 012 229 3	spring washer		3	
		- -- E N D -- -			

Pos	Part Number	Name	Remarks	Qty	Model

Model	Year	MG	SG	Illustration	Restrictions	Update	11:07	06.04.2005	PORSCHE PET PORSCHE
924	79	7	02	702-10		187			

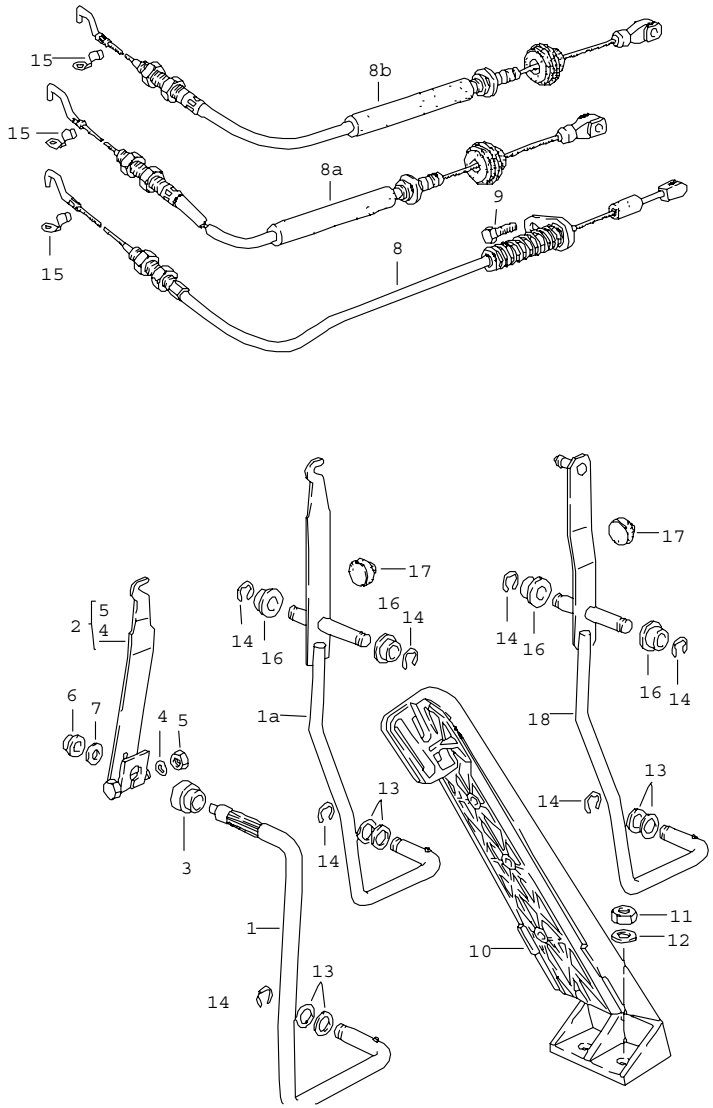

Pos	Part Number	Name	Remarks	Qty	Model
		accelerator pedal accelerator cable			
		F >>92481 00776 F >>92482 01225 F >>92483 30098			
1	E 477 721 545	accelerator lever shaft	/LL	1	
2	E 477 721 537	lever	/LL	1	
3	321 721 543	bearing sleeve	/LL	1	
4	N 012 105 3	serrated lock washer A 6,4		1	
5	900 076 010 02	hexagon nut		1	
6	823 721 553	bearing sleeve	/LL	1	
7	N 011 524 4	washer A 6,4		1	
8	477 721 547 B	accelerator cable	/LL	1	
9	N 010 217 9	hexagon-head bolt M 6 X 20		1	
		F 92481 00777>> F 92482 01226>> F 92483 30099>> F >>92481 09474 F >>92482 11638 F >>92483 30450			
1A	E 477 721 507	lever	/LL	1	
(1A)	E 478 721 507	lever	/RL	1	
8	477 721 547 B	accelerator cable	/LL	1	
(8)	478 721 547 B	accelerator cable	/RL	1	
9	N 010 217 9	hexagon-head bolt M 6 X 20		1	
		F 92491 00001>> F 92492 00001>> F 92493 00001>>			
1B	477 721 507 A	lever	/LL	1	
1B	944 423 031 00	accelerator control	/LL	1	
(1B)	945 423 031 01	accelerator control	/RL	1	924
8A	477 721 547 F	accelerator cable	/LL	1	924

Model	Year	MG	SG	Illustration	Restrictions	Update			
924	79	7	02	702-10		187	11:07	06.04.2005	PORSCHE PET PORSCHE

Pos	Part Number	Name	Remarks	Qty	Model
(8A)	E 478 721 547 C	accelerator cable F >>92491 04100	/RL	1	924
(8A)	478 721 547 E	accelerator cable F 92491 04101>>	/RL	1	924
8B	477 721 547 E	accelerator cable	/LL	1	TURBO
10	827 723 511 A	accelerator pedal		1	
11	900 076 010 02	hexagon nut		2	
12	803 817 121	washer		2	
13	900 025 038 40	washer		2	
14	N 012 436 2	lock washer		3	
15	E 823 721 569	retainer spring		1	
16	477 721 543	bearing sleeve		2	
17	999 703 183 40	buffer		1	
		- -- E N D -- -			

Pos	Part Number	Name	Remarks	Qty	Model

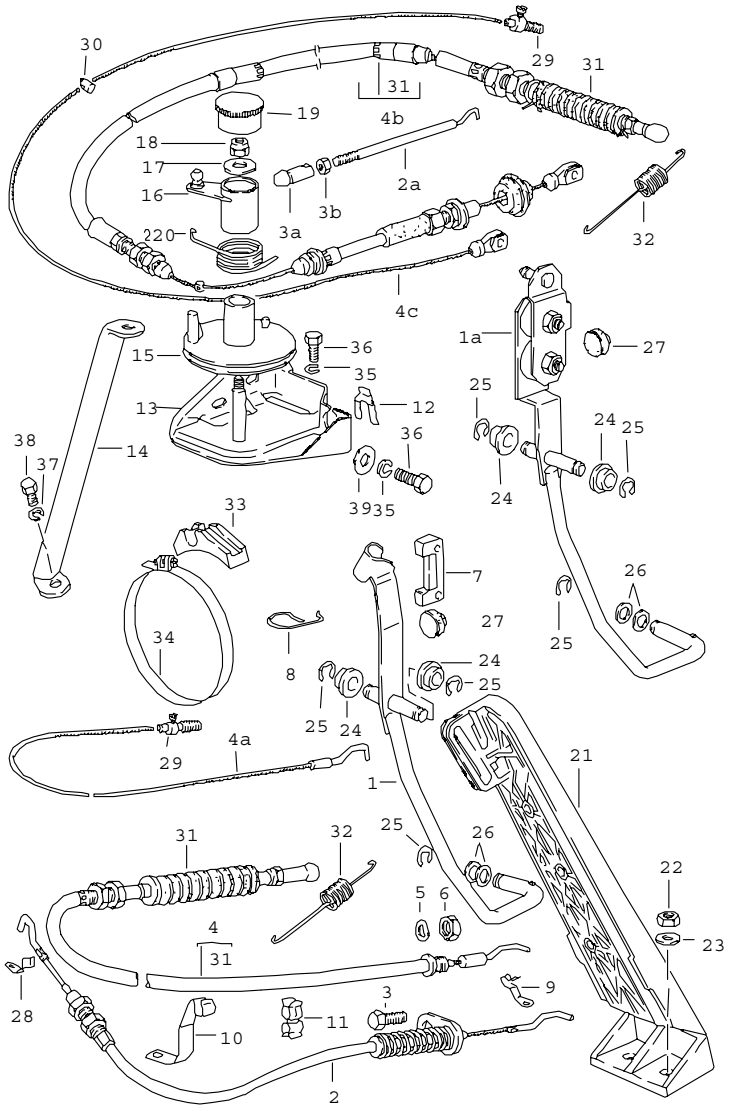

Pos	Part Number	Name	Remarks	Qty	Model
		accelerator pedal accelerator cable			AUT.
1	477 723 507 B	lever	/LL	1	
(1)	478 723 507 A	accelerator control	/RL	1	
2	477 721 547 D	accelerator cable	/LL	1	
(2)	478 723 547	accelerator cable	/RL	1	
3	N 010 217 9	hexagon-head bolt M 6 X 20		1	
4	477 723 557 C	cable control pressure	/LL	1	
4A	477 723 602	cable	/LL	1	
(4)	478 723 557 A	cable control pressure	/RL	1	
(4A)	478 723 602	cable	/RL	1	
5	N 012 230 6	spring washer		1	
6	E 900 158 004 00	hexagon nut M 10		1	
7	477 723 546	lever		1	
8	477 723 551 A	retaining spring		1	
9	477 723 571	retainer spring		2	
10	A 431 721 346 A	dual clamp		1	
11	431 721 346 A	dual clamp		1	
1A	944 423 033 00	accelerator control	/LL	1	
1A	944 423 033 00	accelerator control	/LL	1	
(1)	478 723 507 A	accelerator control	/RL	1	
2A	477 723 535	throttle linkage		1	
3A	911 423 147 00	ball socket		1	
3B	N 011 005 14	hexagon nut		1	
4B	477 723 575 A	accelerator cable accelerator control control pressure	/LL	1	
4C	477 723 602 C	cable	/LL	1	

Pos	Part Number	Name	Remarks	Qty	Model
(4B)	478 723 575 A	accelerator cable accelerator control control pressure	/RL	1	
(4C)	478 723 602 B	cable	/RL	1	
12	N 012 323 1	circlip		1	
13	E 477 723 525	support		1	
14	477 723 579	bracket		1	
15	477 723 511	deflection roller		1	
16	477 723 515	accelerator control		1	
17	477 723 531	washer		1	
18	113 251 273	hexagon nut M 6		1	
19	999 659 045 40	protection cap		1	
20	477 723 523	spring		1	
35	N 012 226 5	spring washer		3	
36	N 010 215 13	hexagon-head bolt M 6 X 15		3	
37	N 012 228 3	spring washer		1	
38	N 010 237 6	hexagon-head bolt M 8 X 12		1	
39	900 151 003 02	washer		2	
21	827 723 511 A	accelerator pedal		1	
22	900 076 010 02	hexagon nut		2	
23	803 817 121	washer		2	
24	477 721 543	bearing sleeve		2	
25	N 012 436 2	lock washer		3	
26	900 025 038 40	washer		2	
27	999 703 183 40	buffer		1	
28	E 823 721 569	retainer spring		1	
29	477 723 601	nipple		1	
30	477 723 611	nipple		1	
31	311 713 269 A	bellows		1	
(32)	477 723 563 C	tension spring		1	
33	477 723 567	support		4	
34	999 512 350 02	hose clamp		4	

- -- E N D -- -

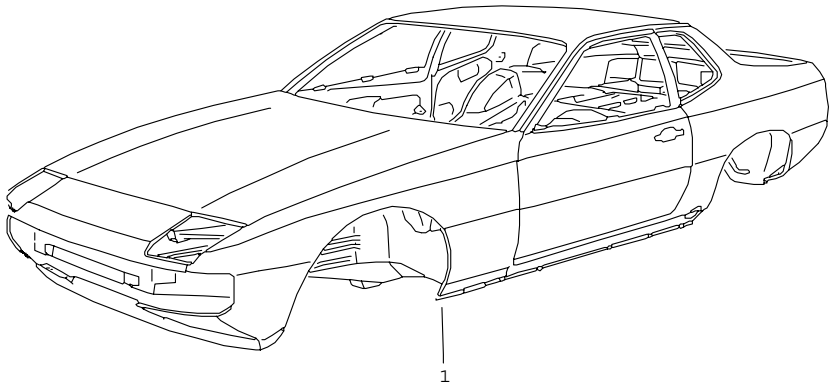

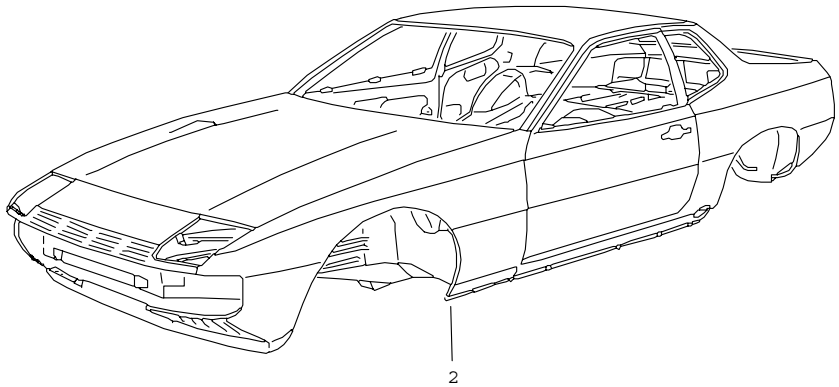

Pos	Part Number	Name	Remarks	Qty	Model
		body in white with cover wing doors prime coated sealed underbody protection sprayed with filler bodyshells can only be delivered of the current model year - -- E N D -- -			

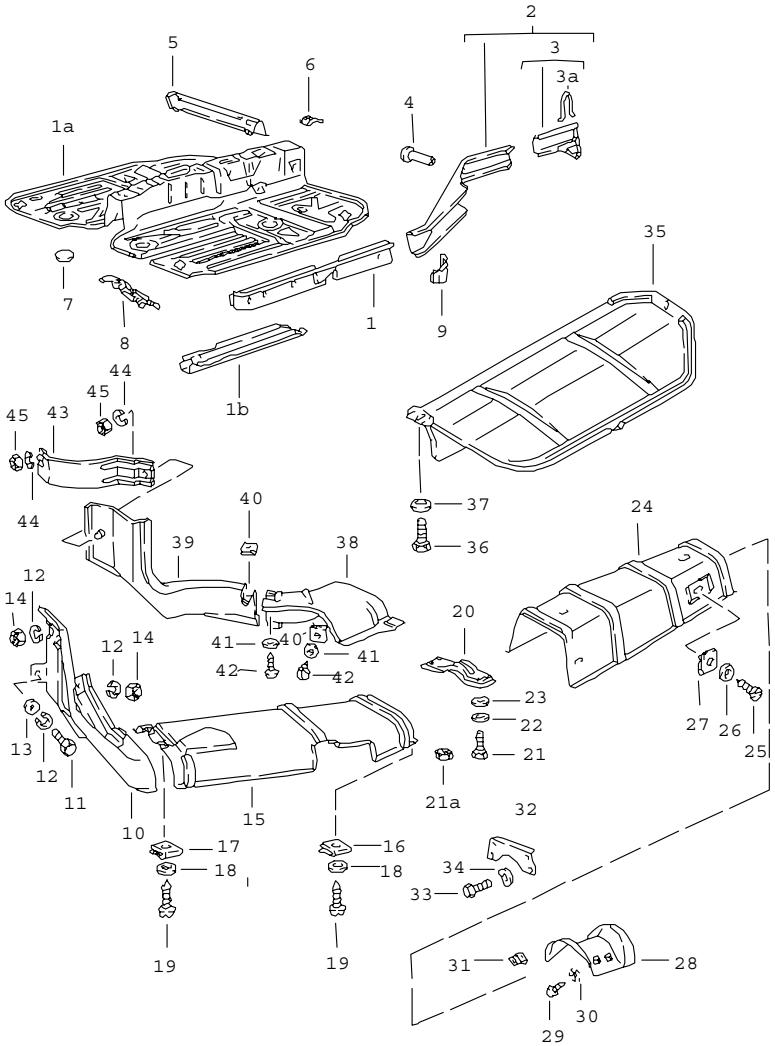

Pos	Part Number	Name	Remarks	Qty	Model
		side member cover plate			
1	477 803 103	side member centre	/L	1	
(1)	477 803 112	side member centre	/LL/R	1	
(1)	478 803 104	side member centre	/RL/R	1	
-	999 703 119 40	plug side member		8	
1A	944 501 501 00	floor section		1	
1B	477 803 283	side member floor section centre		2	
2	477 803 105	side member use also: 477.803.145 F >>92481 00776	/L	1	924
2	477 803 105 A	side member use also: 477.803.145 F 92481 00777>>	/L	1	
(2)	477 803 106	side member use also: 477.803.145 F >>92481 00776	/R	1	924
(2)	477 803 106 A	side member use also: 477.803.145 F 92481 00777>>	/R	1	
3	477 803 125 A	end piece	/L	1	
(3)	477 803 126	end piece	/R	1	
3A	477 803 129	retaining bow		2	
4	477 803 145	bush		2	
5	E 477 803 231	cross member	/V/L	1	
(5)	477 803 232	cross member	/V/R	1	
6	477 803 241	bracket front seat	/H	4	
7	411 803 595	cover		2	

Pos	Part Number	Name	Remarks	Qty	Model
8	477 803 729	foot support	/LL	1	
9	477 803 871	bracket F >>92481 00776	/L	1	924
9	477 803 871 A	jacking point F 92481 00777>>	/L	1	
(9)	477 803 872	bracket F >>92481 00776	/R	1	924
(9)	477 803 872 A	jacking point F 92481 00777>>	/R	1	
10	477 809 214 A	cover plate		1	
11	999 072 005 09	hexagon-head bolt M 6 X 12		3	
12	N 012 006 4	lock ring B 6		3	
13	N 011 524 7	washer A 6,4		4	
14	900 076 010 02	hexagon nut M 6		1	
15	477 803 397	cover plate	-78	1	
15	477 803 387	cover plate	79-	1	
16	N 015 458 1	speed nut B 4,8 X 19	-78	2	
16	N 015 458 1	speed nut B 4,8 X 20	79-	2	
17	N 015 458 1	speed nut B 4,8 X 20		2	
18	900 151 027 02	washer B 5,3		4	
19	N 013 968 7	tapping screw B 4,8 X 13		4	
20	E 477 803 275	strut	-78	1	
(20)	477 803 253	strut	79-	1	
21	900 075 087 02	hexagon-head bolt M 8 X 15	-78	4	
21A	N 011 008 8	hexagon nut M 8	79-	4	
22	N 011 670 1	washer 8,1	-78	2	
(22)	N 011 525 13	washer A 8,4	79-	4	
23	N 012 229 3	spring washer A 8	-78	4	
(23)	900 027 015 02	lock ring B 8	79-	4	
(24)	E 477 803 869	cover plate	79-	1	TURBO
28	477 803 879	cover plate	-78	1	
29	900 143 007 02	tapping screw B 4,2 X 13	-78	4	
30	E 900 115 004 01	serrated lock washer A 4,3	-78	4	
31	999 591 331 02	speed nut	-78	4	
32	477 803 291	strut		2	
33	N 010 237 6	hexagon-head bolt M 8 X 12		8	
34	N 012 229 3	spring washer A 8		8	
35	E 477 813 139	cover plate		1	(B)
(35)	477 813 139 A	cover plate	AUT.	1	
(35)	944 503 139 00	cover plate oval		1	
36	999 072 005 09	hexagon-head bolt M 6 X 12		3	
37	900 151 029 02	washer 6,4		3	
38	477 803 393	cover plate		1	TURBO
39	477 803 394	cover plate		1	TURBO
40	E N 900 620 01	speed nut		2	TURBO
41	900 151 027 02	washer B 5,3		2	TURBO
42	N 013 968 7	tapping screw B 4,8 X 13		2	TURBO
43	477 809 497	cover plate		1	TURBO

Pos	Part Number	Name	Remarks	Qty	Model	Pos	Part Number	Name	Remarks	Qty	Model
44	N 012 026 3	lock ring 6		2	TURBO						
45	900 076 010 02	hexagon nut M 6		2	TURBO						
-	477 863 671	heat insulation	/H	1	TURBO						
		- -- E N D -- -									

Model	Year	MG	SG	Illustration	Restrictions	Update				
924	79	8	01	801-10		187	11:08	06.04.2005	PORSCHE	PET	PORSCHE

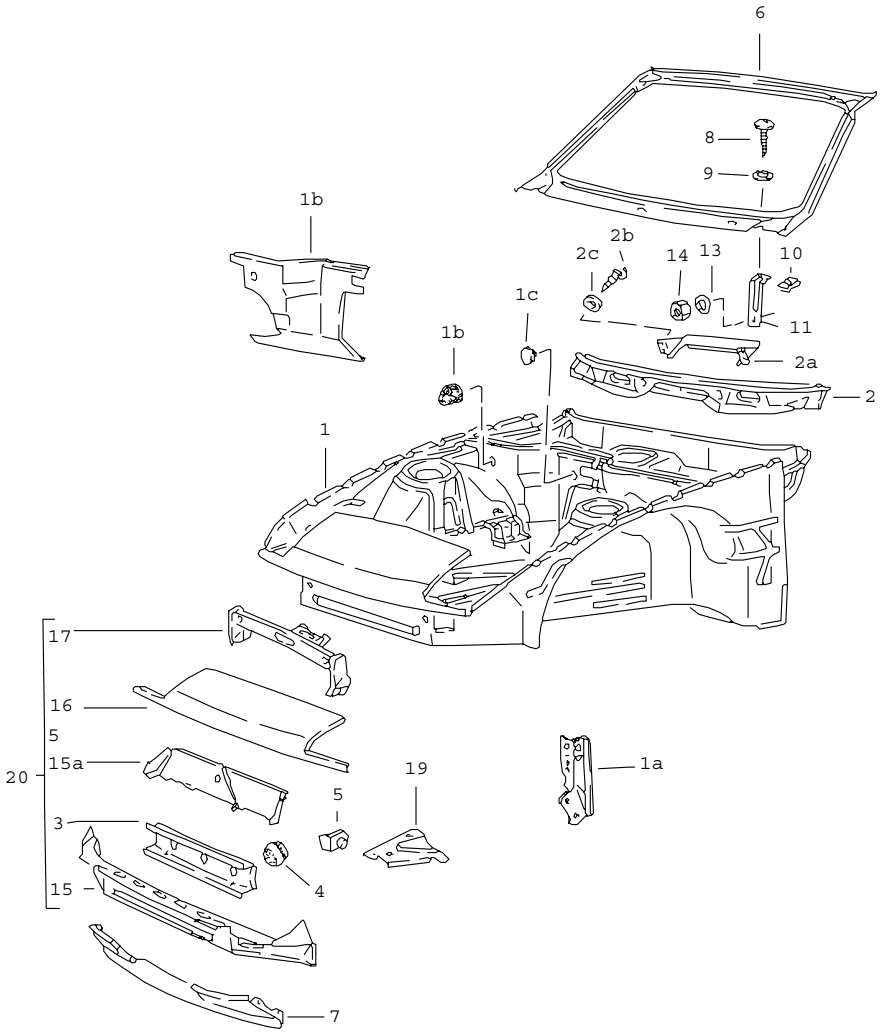

Pos	Part Number	Name	Remarks	Qty	Model
		body front section			
1	477 805 021 AS	body front section without carbon canister use also: plug 999 703 103 40	/LL	1 2	924
(1)	477 805 021 F	body front section	/LL	1	TURBO
(1)	478 805 021 M	body front section without carbon canister use also: plug 999.703.103.40	/RL	1 2	924
1A	477 805 057 A	reinforcement	/L	1	
(1A)	477 805 058 A	reinforcement	/R	1	
(1B)	944 502 021 01	firewall	/L	1	
(1B)	944 502 202 00	firewall	/R	1	
2	944 502 079 00	cross member	/LL	1	
(2)	945 502 079 00	cross member	/RL	1	
3	477 805 477	cross member	/V	1	
4	803 803 583	drain bush		3	
5	E 477 805 567	bracket	/L	1	
(5)	477 805 568	bracket	/R	1	
6	477 805 571 A	windscreen frame		1	
7	944 503 035 01	spoiler		1	924
(7)	944 503 035 00	spoiler		1	TURBO
8	900 143 046 07	tapping screw 4,8 X 13		2	
9	N 011 527 12	washer A 5,3		2	
10	E N 015 436 1	speed nut 4,8 X 14,8		2	
11	477 805 592	cowl panel support		2	
-	N 010 215 13	hexagon-head bolt M 6 X 12	-78	2	924

Pos	Part Number	Name	Remarks	Qty	Model	Pos	Part Number	Name	Remarks	Qty	Model
13	N 011 666 7	washer 6,1	-78	4	924						
(13)	N 011 612 3	washer R 7	79-	2							
14	900 910 012 02	lock nut M 6		2							
15	944 503 043 00	end plate lower		1							
15A	944 502 061 00	air duct		1							
16	477 805 593	end plate upper when required order also: POS.5		1	924						
(16)	E 477 805 593 A	end plate upper		1	TURBO						
17	944 501 933 01	lock carrier		1							
18	477 805 667	water drain valve		2							
19	477 805 699	corner plate	/L	1	M573						
(19)	477 805 682	corner plate F >>92481 00776	/R	1	924						
20	477 805 591	terminal piece complete		1	924						
		- -- E N D -- -									

Model	Year	MG	SG	Illustration	Restrictions	Update	11:08	06.04.2005	PORSCHE PET PORSCHE
924	79	8	01	801-15		187			

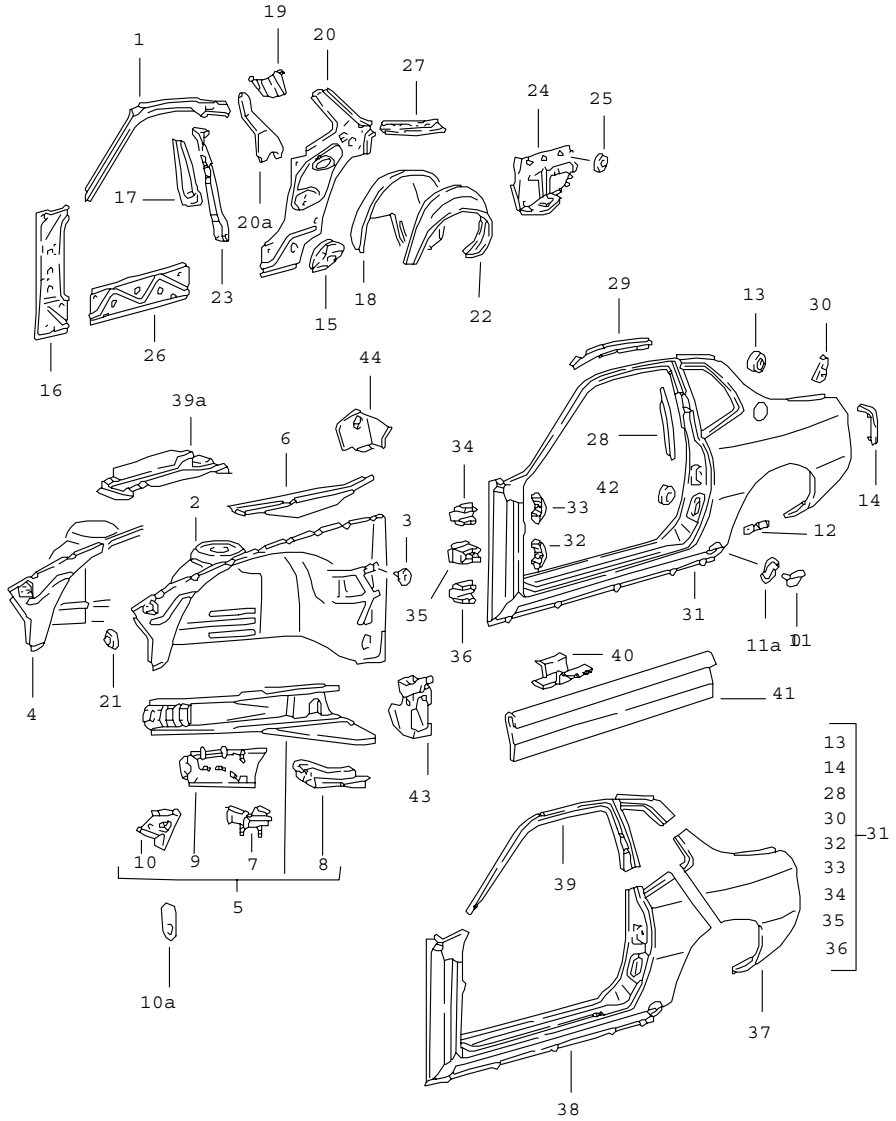

Pos	Part Number	Name	Remarks	Qty	Model
		side section			
1	477 809 037	separator inner	/L	1	
(1)	477 809 037	separator	/L	1	M650
(1)	477 809 038	separator	/R	1	
(1) A	477 809 038	separator	/R	1	
-	311 881 945 A	plug		3	
2	477 809 103 D	wheel housing without carbon canister use also: plug 999.703.103.40	/L	1 2	
(2)	477 809 104 D	wheel housing use also: 478.809.446	/R /RL	1	
3	N 020 025 1	plug		3	924
4	477 809 105	sub-part	/L	1	
(4)	477 809 108 C	wheel housing	/R -78	1	924
(4)	477 809 108 C	wheel housing	/R 79-	1	
(5) A	477 809 111 H	side member	/L -78	1	924
(5) E	477 809 111 M	side member	/L -78	1	924
(5)	477 809 112 M	side member	/R -78	1	924
(5)	477 809 111 Q	side member	/L 79-	1	
(5)	477 809 112 Q	side member	/R 79-	1	
6	477 809 119	side member upper	/LL/L	1	924
(6)	945 502 119 02	side member	/RL/L	1	924
(6)	477 809 119 A	side member	/LL/L	1	TURBO
(6)	477 809 120	side member upper	/LL/R	1	
(6)	478 809 120	side member	/RL/R	1	924
7	477 809 151	bearing bracket		2	
8 E	477 809 165	bracket F >>92481 03515	/L	1	924

Pos	Part Number	Name	Remarks	Qty	Model
8	E 477 809 165 A	bracket F 92481 03516>>92481 09474	/L -78	1	
8	951 501 165 00	end plate	/L 79-	1	
(8)	E 477 809 166	bracket F >>92481 03515			
(8)	477 809 166 A	bracket F 92481 03516>>92481 09474	/R -78	1	
(8)	951 501 166 00	end plate	/R 79-	1	
(9)	944 501 081 00	filler plate	/L	1	
(9)	944 501 082 00	filler plate	/R	1	
10	477 809 221 A	separator	/L	1	
(10)	477 809 268 B	separator	/R	1	
-	477 809 525	towing lug	/L	1	
10A	477 809 035	support water reservoir	/R	1	
11	477 809 335	cover F >>92481 00776		2	924
(11A)	E 477 809 336	gasket F >>92481 00776		2	924
12	E 477 809 341	clamping spring F >>92481 00776		2	924
13	477 809 355	retainer tank filler neck		1	
14	A 477 809 375 A	bracket for light	/L	1	
14	477 809 375 A	bracket for light	/L	1	
(14)	477 809 376 A	bracket for light	/R	1	
(14)	477 809 376 A	bracket for light	/R	1	
15	477 809 387	corner plate F >>92481 00776	/L	1	924
15	477 809 387 A	corner plate F 92481 00777>>	/L	1	
(15)	E 477 809 388	corner plate F >>92481 00776	/R	1	924
(15)	477 809 388 A	corner plate F 92481 00777>>	/R	1	
16	477 809 393 A	hinge pillar inner	/L	1	
(16)	477 809 394 A	hinge pillar inner	/R	1	
17	477 809 397	centre pillar inner	/L	1	
(17)	477 809 398	centre pillar inner	/R	1	
18	477 809 403	wheel housing inner F >>92481 00776	/L	1	924
18	477 809 403 F	wheel housing inner F 92481 00777>>92481 09474	/L	1	924
(18)	477 809 403 F	wheel housing inner	/L 79	1	
(18)	477 809 404	wheel housing inner F >>92481 00776	/R	1	924
(18)	477 809 404 H	wheel housing inner F 92481 00777>>92481 09474	/R	1	924
(18)	477 809 404 H	wheel housing inner	/R	1	
-	E 477 809 852 A	bracket filler neck see workshop manual		1	
19	E 477 809 205	mounting fuel pump	-78	1	924
20	944 502 901 00	side section inner	/L -78	1	924
(20)	944 502 902 00	side section	/R -78	1	924
20	944 502 901 00	side section	/L 79	1	
(20)	944 502 902 00	side section	/R 79	1	
21	803 803 583 A	cover		6	
22	477 809 411 B	wheel housing outer	/L -78	1	924
(22)	477 809 412	wheel housing	/R -78	1	924
22	477 809 411 B	wheel housing	/L 79	1	

Pos	Part Number	Name	Remarks	Qty	Model
(22)	477 809 412 B	wheel housing	/R 79	1	
23	477 809 415	reinforcement	/L	1	
(23)	E 477 809 416	reinforcement	/R	1	
24	477 809 421 A	side section inner	/L	1	
(24)	477 809 422 A	side section inner	/R	1	
25	803 803 583 A	cover		8	
26	477 809 433	separator		2	
27	944 502 439 00	reinforcement		1	
(27)	477 809 440	reinforcement		1	
28	477 809 445	reinforcement	/L	1	
(28)	477 809 446	reinforcement	/R	1	
29	477 809 585	filler plate roof frame inner	/L	1	
(29)	477 809 586	filler plate roof frame inner	/R	1	
30	477 809 617	retaining bracket	/L	1	
(30)	477 809 618	retaining bracket	/R	1	
(31)	477 809 601 AA	side section	/L	1	924
(31)	477 809 601 AC	side section see workshop manual	/L	1	TURBO
(31)	477 809 602 BE	side section	/R	1	924
(31)	477 809 602 BE	side section see workshop manual	/R	1	TURBO
(32)	477 809 620	mounting plate		1	
33	477 809 653	mounting plate		2	
34	477 809 655	hinge reinforcement upper		2	
35	477 809 625	reinforcement		2	
36	477 809 621	hinge reinforcement lower	/L	1	
(36)	477 809 622	hinge reinforcement lower	/R	1	
37	477 809 843	sub-part	/L -78	1	924
(37)	477 809 843 B	sub-part	/L 79	1	
(37)	477 809 844 F	sub-part	/R -78	1	
(37)	477 809 844 B	sub-part	/R 79	1	
(38)	477 809 847 B	side member section see workshop manual TURBO use also: POS. 40 POS. 41	/L	1 4	
(38)	477 809 848 B	side member section see workshop manual TURBO use also: POS. 40 POS. 41	/R	1 4	
39	477 809 849 A	sub-part roof pillar	/L	1	
(39)	477 809 850 A	sub-part roof pillar	/R	1	
39A	477 809 867 B	bracket	79	1	
40	477 809 471	support		8	TURBO
41	477 809 685	attachment strip	/L	1	TURBO
(41)	477 809 686	attachment strip	/R	1	TURBO
42	999 025 074 02	washer see workshop manual		2	
43	477 809 484	bearing bracket engine suspension	/R	1	TURBO
-	477 863 557	heat protection	/R	1	TURBO
44	478 809 446	bearing bracket accelerator pedal	/RL	1	
		- -- E N D -- -			

Model	Year	MG	SG	Illustration	Restrictions	Update				
924	79	8	01	801-20		187	11:08	06.04.2005	PORSCHE	PET	PORSCHE

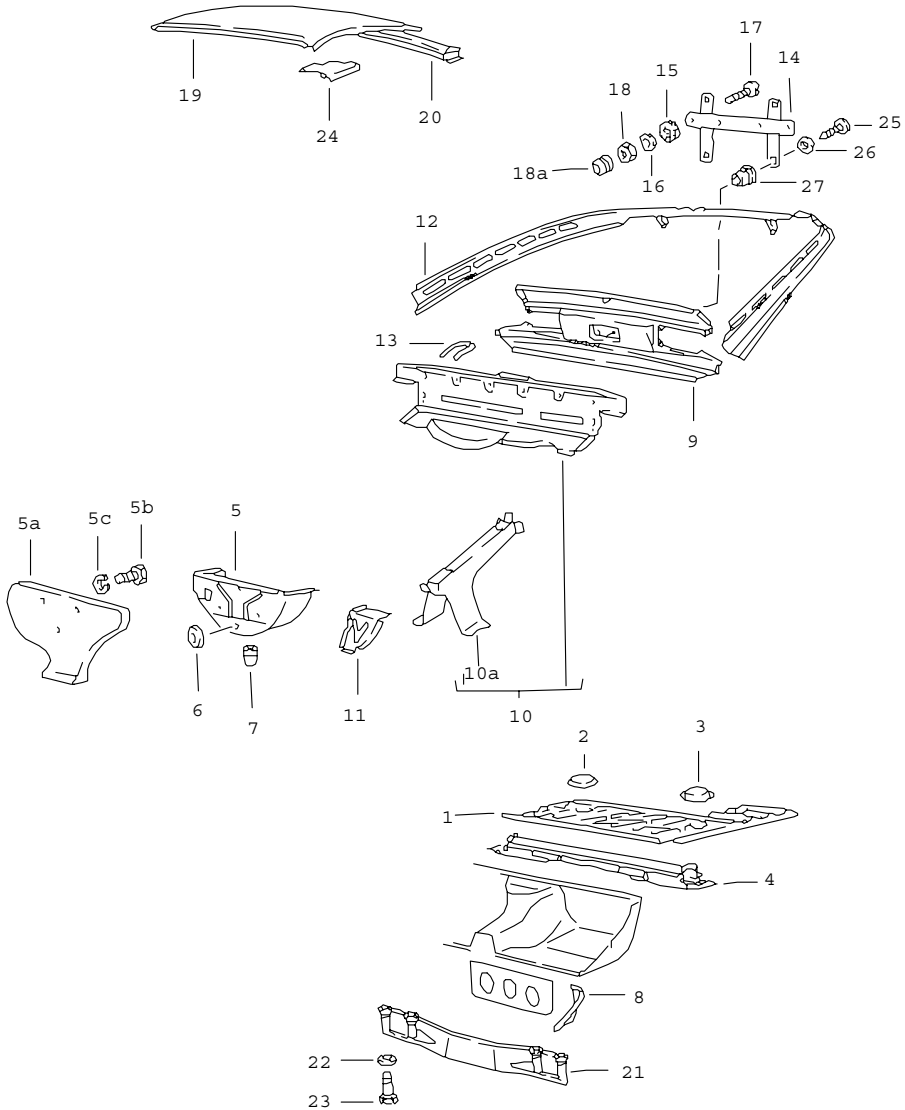

Pos	Part Number	Name	Remarks	Qty	Model
		transmission carrier boot floor plate roof			
1	944 501 075 00	boot floor plate		1	
2	477 803 581	cover tank gauge		1	
3	411 803 595	cover		1	
4	477 813 115 B	transmission carrier	-77	1	924
4	477 813 115 B	transmission carrier	78	1	
(4)	477 813 115 C	transmission carrier	79	1	
5	477 813 131	spare-wheel well	/V	1	
6	803 803 583	drain bush		3	
7	111 701 309	rubber sleeve		1	
8	477 813 145	corner panel heel plate F >>92481 00776	/L	1	924
8 A	477 813 145 B	corner panel F 92481 00777>>	/L	1	
8	477 813 145 B	corner panel	/L	1	
(8) E	477 813 146	corner plate heel plate F >>92481 00776	/R	1	924
(8)	477 813 146 B	corner panel F 92481 00777>>	/R	1	
(8)	477 813 146 B	corner panel	/R	1	
9	944 503 037 01	end plate		1	
-	477 813 345	reinforcement	/L	1	924
-	477 813 345 A	reinforcement	/L	1	TURBO
-	477 813 346	reinforcement	/R	1	924
-	477 813 346 A	reinforcement	/R	1	TURBO
10	944 503 901 01	end plate lower		1	
-	477 813 169	angle scissors type jack	/L	1	

Pos	Part Number	Name	Remarks	Qty	Model
-	477 813 170	angle scissors type jack	/R	1	
-	477 813 165	support		1	
10A	477 813 393 A	support muffler		1	
11	477 813 309	corner panel	/L	1	
(11)	944 502 210 00	corner panel	/R	1	
11AE	477 813 159	support emergency wheel		1	
(12)	477 813 315	lock carrier see group 8/01/15 POS.27 F >>92471 01147		1	
12	944 502 035 02	lock carrier with reinforcement F 92471 01148>>		1	
-	951 512 447 00	reinforcement plate lock carrier		2	
13	477 813 529	towing lug		1	
14	928 701 050 03	support number plate		1	(USA) (J) (CH)
15	803 011 243	rubber washer		2	
15	803 011 243	rubber washer		2	
(15)	477 813 993	desk pad		2	(I)
16	N 012 226 5	spring washer A 6		2	
17	N 014 140 5	oval-head screw M 6 X 15		2	
18	900 076 010 02	hexagon nut M 6		2	
(19)	944 503 912 01	roof		1	M650
(19)	944 503 912 01	roof		1	M650
19	477 817 111 B	roof		1	
20	477 817 171	cross member		1	
21	477 813 285	strut seat well F 92481 00777>>		1	
22	900 074 181 02	screw M 10 X 95		4	
23	900 025 008 09	washer 10,5		4	
25	900 143 134 00	tapping screw BZ 4,2 X 9,5		4	(USA) (J) (CH)
26	N 011 522 8	washer 4,3		4	(USA) (J) (CH)
27	999 591 498 40	special nut		4	(USA) (J) (CH)

- -- E N D -- -

Model	Year	MG	SG	Illustration	Restrictions	Update	11:08	06.04.2005	PORSCHE PET PORSCHE
924	79	8	01	801-25		187			

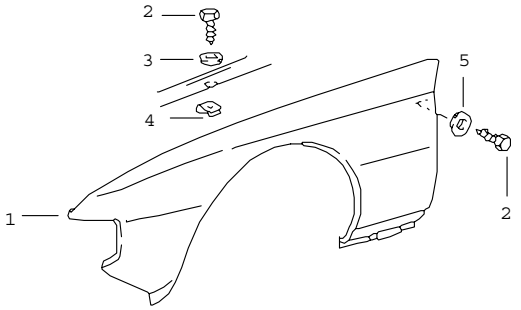

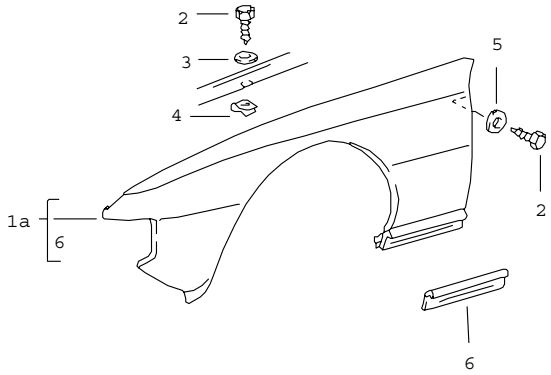

Pos	Part Number	Name	Remarks	Qty	Model
		wing			
1	477 821 021 M	wing	/L	1	924
(1)	477 821 022 M	wing	/R	1	924
1A E	477 821 021 D	wing	/L	1	TURBO
(1A)	477 821 022 D	wing	/R	1	TURBO
2	N 013 891 1	tapping screw 6,3 X 19		28	
3	900 151 029 02	washer B 6,4		26	
4	999 507 003 02	speed nut B 6,3 X 17		26	
5	N 011 524 7	washer A 6,4		2	
6	477 809 681	attachment strip for sill cover		2	TURBO
		- -- E N D -- -			

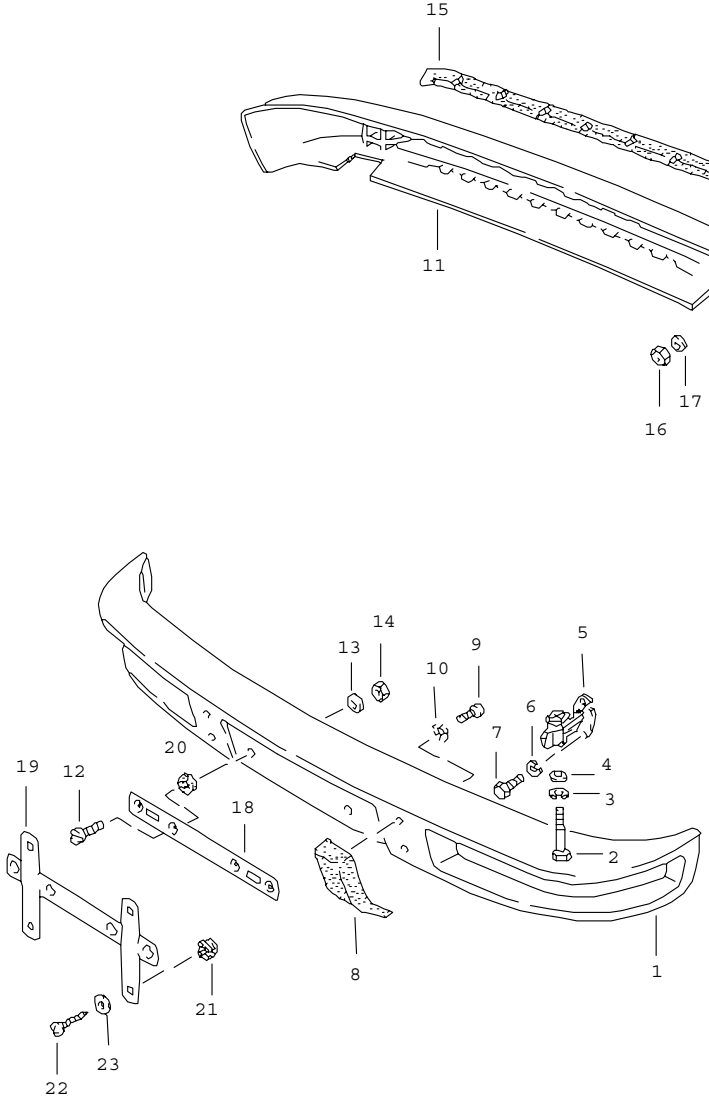

Pos	Part Number	Name	Remarks	Qty	Model
		bumper without impact absorber			
1	477 807 113	bumper	/V	1	
(1)	477 807 113 B	bumper use also: -78 jet carrier 477.955.177 nut N 019121.1	/V	1 2 2	M 288
2	900 074 064 02	hexagon-head bolt M 10 X 60		4	
3	900 027 016 02	lock ring B 10		4	
4	900 025 008 09	washer A 10,5		4	
5	477 807 131 A	bumper reinforcement		4	
6	N 012 009 3	lock ring A 8		8	
7	900 075 087 02	hexagon-head bolt M 8 X 16		8	
8	477 807 193	bumper horn for bumper	/L	1	
(8)	477 807 194	bumper horn for bumper	/R	1	
9	900 067 011 02	pan-head screw M 6 X 20		4	
10	N 012 105 3	serrated lock washer A 6,4		4	
11	477 807 313	bumper	/H	1	
12	N 100 457 01	countersunk-head screw M 5 X 25		2	
13	900 151 027 02	washer A 5,3		2	
14	900 910 009 02	lock nut M 5		2	
15	477 807 319	protective moulding	/H	1	
16	113 101 175	hexagon nut M 6		10	

Pos	Part Number	Name	Remarks	Qty	Model
17	N 011 524 7	washer A 6,4		10	
18	911 701 121 03	support number plate		1	
-	N 015 430 1	speed nut number plate mount		2	
19	928 701 050 03	support		1	(J)
20	914 571 903 10	sealing ring		4	
21	999 591 498 40	special nut		X	
22	900 143 134 00	tapping screw BZ 4,2 X 9,5		X	
23	N 011 522 8	washer 4,3		X	
		- -- E N D -- -			

Pos	Part Number	Name	Remarks	Qty	Model

Model	Year	MG	SG	Illustration	Restrictions	Update	11:09	06.04.2005	PORSCHE PET PORSCHE
924	79	8	02	802-05		187			

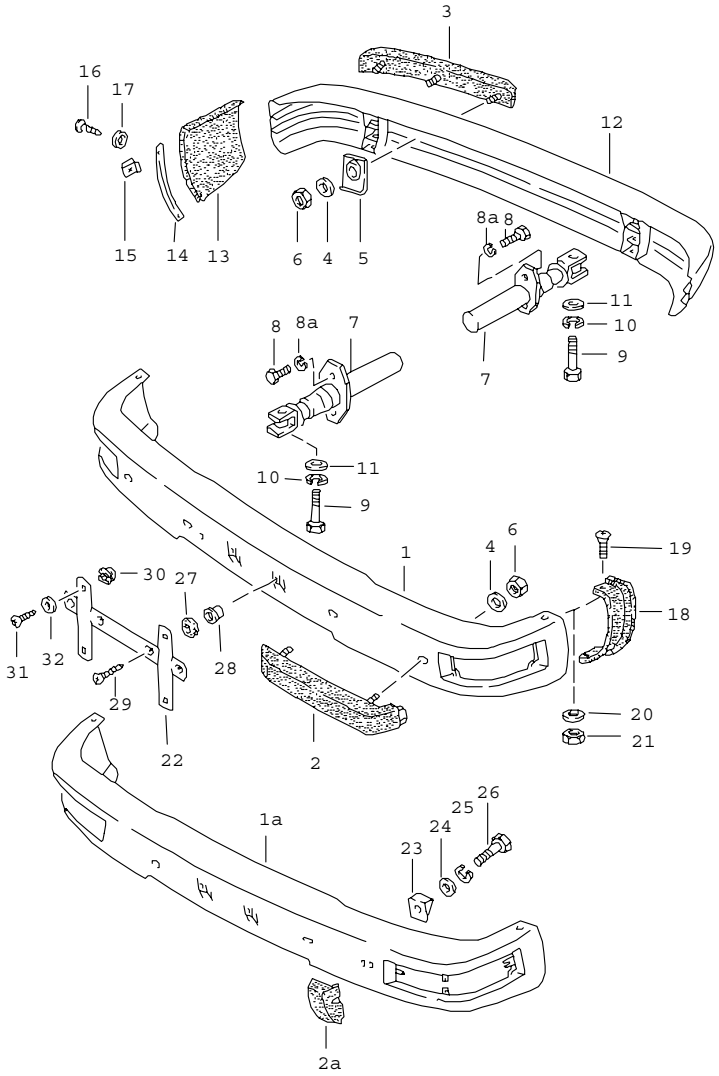

Pos	Part Number	Name	Remarks	Qty	Model
		bumper with impact absorber			
1A	477 807 109 H	bumper	/V 79	1	M 058
(1A)	477 807 109 C	bumper	/V 79	1	M 058/288
2A	477 807 353	bumper horn for bumper	/L	1	M 058
(2A)	477 807 354	bumper horn for bumper	/R	1	M 058
(3)	477 807 157	rubber moulding	/L	1	
3	477 807 158	rubber moulding	/R	1	
4	N 011 612 3	washer R 7		6	M 058
5	477 807 197	support buffer		6	
6	113 101 175	hexagon nut		6	M 058
6	113 101 175	hexagon nut		10	M 036
7	944 505 017 03	impact absorber		4	
8	N 010 240 16	hexagon-head bolt M 8 X 20		8	
9	N 010 165 2	hexagon-head bolt M 12 X 65		4	
10	N 012 042 4	lock ring B 12		4	
11	N 011 531 7	washer A 13		4	
12	477 807 301 A	bumper		1	
(13)	E 477 807 343	cover		1	
13	477 807 344	cover		1	
(14)	477 807 345	insert		1	
14	477 807 346	insert		1	
15	N 015 438 1	speed nut B 3,5 X 16,5		4	
16	N 013 959 3	tapping screw B 3,5 X 16		4	

Pos	Part Number	Name	Remarks	Qty	Model
17	900 151 028 02	washer		4	
18	477 807 347	cap	/L	1	
(18)	477 807 348	cap	/R	1	
19	N 014 260 1	oval-head screw AM 4 X 14		4	
20	900 151 028 02	washer B 4,3		4	
21	N 011 004 6	hexagon nut M 4		4	
22	928 701 050 03	support number plate		1	
23	477 807 361	plate	/L	1	M 058
(23)	477 807 362	plate	/R	1	M 058
24	N 011 652 1	washer 7		2	M 058
25	N 012 006 4	lock ring B 6		2	M 058
26	N 010 339 3	hexagon-head bolt M 6 X 40		2	M 058
27	944 505 351 00	spacer rubber		2	
28	N 902 508 01	special nut		2	
29	N 043 983 1	tapping screw B 5,5 X 32		2	
30	999 591 498 40	special nut		4	
31	900 143 134 00	tapping screw BZ 4,2 X 9,5		4	
32	N 011 522 8	washer 4,3		4	
		- -- E N D -- -			

Pos	Part Number	Name	Remarks	Qty	Model

Model	Year	MG	SG	Illustration	Restrictions	Update	11:09	06.04.2005	PORSCHE PET PORSCHE
924	79	8	03	803-00		187			

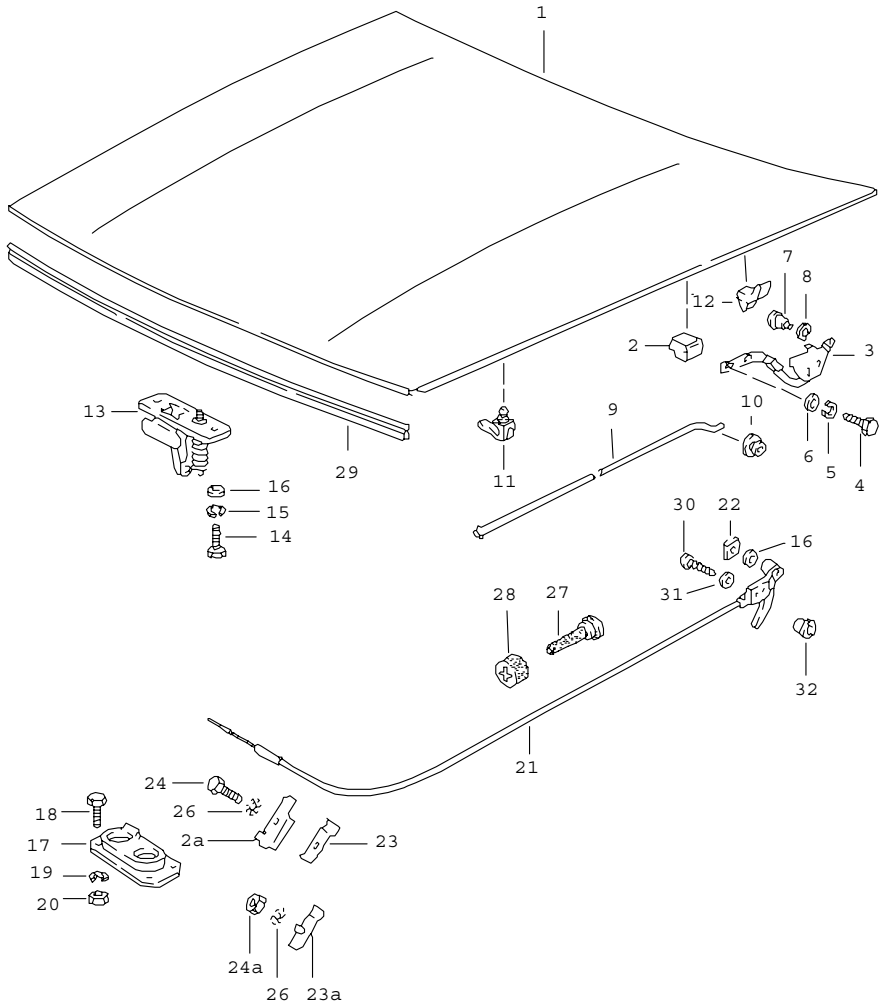

Pos	Part Number	Name	Remarks	Qty	Model
		cover front actuator lid lock			
1	944 511 005 01	cover		1	924
(1)	477 823 031 A	cover		1	TURBO
2	477 823 185	filler piece		1	
2A	477 823 207	reinforcement angle F >>92481 06614		1	924
3	944 511 301 00	hinge	/L	1	
(3)	944 511 302 00	hinge	/R	1	
4	N 010 240 16	hexagon-head bolt M 8 X 20		8	
5	900 027 015 02	lock ring B 8		8	
6	N 011 525 13	washer A 8,4		8	
7	477 823 307	pin		2	
8	N 012 230 6	spring washer B 10		2	
9	477 823 363 A	hood stay		1	
10	171 823 395	rubber mounting		1	
(11)	431 823 397	support		1	
12	477 823 493	guide piece		4	
13	477 823 507	lock upper part lid lock		1	
14	999 072 005 09	hexagon-head bolt M 6 X 12		2	
16	E 999 025 049 02	washer		2	
17	928 511 027 02	lid lock lower part		1	
18	900 075 116 02	hexagon-head bolt M 4 X 8		4	
19	N 012 004 2	lock ring B 4		4	

Pos	Part Number	Name	Remarks	Qty	Model	Pos	Part Number	Name	Remarks	Qty	Model
20	N 011 004 6	hexagon nut M 4		4							
21	477 823 531 A	lid lock cable		1							
22	N 012 855 1	clamping washer		1							
23A	477 823 551	clamping piece		1							
24	999 072 005 09	hexagon-head bolt M 6 X 12 F >>92481 06014		2	924						
24A	900 076 010 02	hexagon nut M 6		1							
25	N 012 106 1	lock washer J 6,4		1							
26	N 012 006 4	lock ring A 6		1							
27	477 823 591	grommet		1							
28	477 823 593	plug		1							
29	928 511 141 04	gasket		1							
30	E N 013 941 3	tapping screw 4,8 X 32 F >>92481 06278		2	924						
30	N 013 952 1	tapping screw 4,8 X 50		2							
31	900 025 003 02	washer A 5,3		2							
32	477 823 165	bush F 92481 06279>>		2							
		- -- E N D -- -									

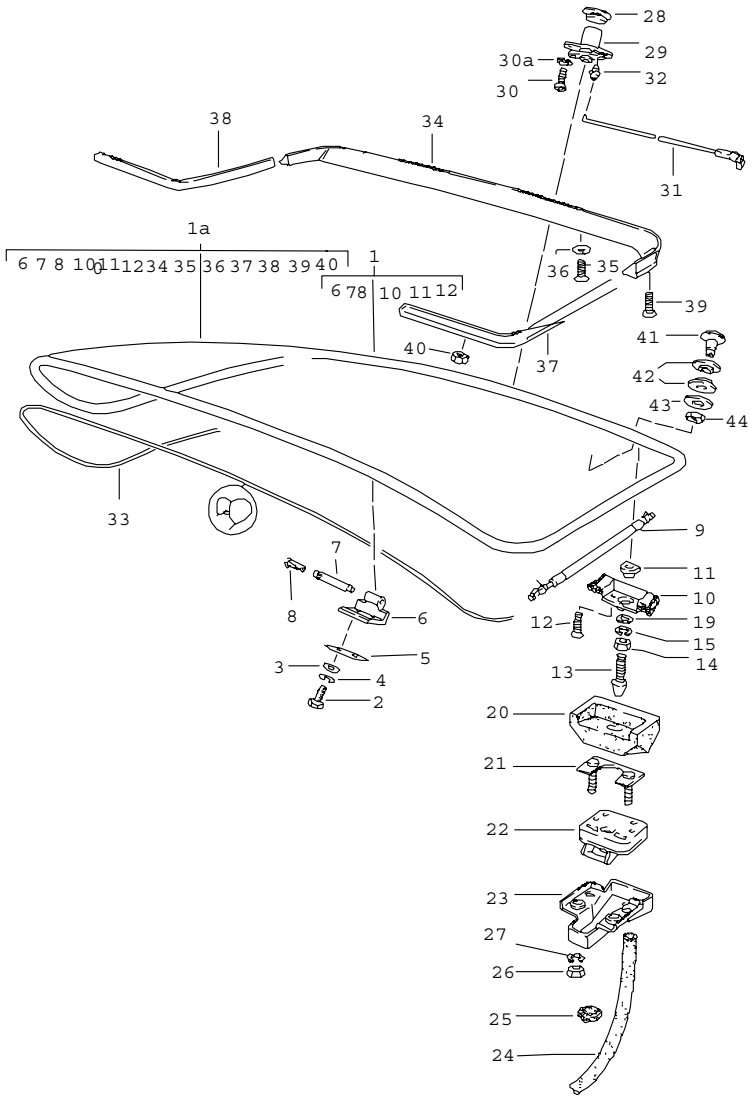

Pos	Part Number	Name	Remarks	Qty	Model
		rear lid with rear window			
(1)	477 827 027 G	rear lid with moulding see technical information GRUPPE 6, NR.6 without M425 use also: POS.41-44		1	924 M 425
1A	477 827 027 K	rear lid with moulding rear spoiler ---------- rear lid together with wiper motor see group 9/04/05 ----------		1	TURBO
2	999 072 005 09	hexagon-head bolt M 6 X 12 F >>92471 06849 F >>92472 33559 F >>92473 30159		4	924
2	E N 014 768 3	pan-head screw M 8 X 12 F 92471 06850>> F 92472 33560>> F 92473 30160>>		4	
3	N 011 612 3	washer R 7 F >>92471 06849 F >>92472 33559 F >>92473 30159		4	924
3	111 129 720	washer F 92471 06850>> F 92472 33560>> F 92473 30160>>		4	
4	N 012 006 4	lock ring B 6 F >>92471 06849 F >>92472 33559 F >>92473 30159		4	924

Pos	Part Number	Name	Remarks	Qty	Model
4	900 027 015 02	lock ring B 8 F 92471 06850>> F 92472 33560>> F 92473 30160>>		4	
5	944 512 413 00	gasket lid hinge		2	
6	477 827 305 B	hinge half		2	
7	A 944 512 311 00	hinge pin		2	
7	944 512 311 00	hinge pin		2	
8	477 827 441	bush hinge pin		2	
(9)	E 477 827 348 E	gas-filled strut	/R	1	
9	477 827 349 D	gas-filled strut	/L	1	
-	477 827 351	ball socket without rear window wiper F >>92471 02605 F >>92472 08092 F >>92473 00253 with rear window wiper F >>92471 02018 F >>92472 07088 F >>92473 00248		4	924
-	E 477 827 351 A	ball socket without rear window wiper F 92471 02606>> F 92472 08093>> F 92473 00254>> with rear window wiper F 92471 02019>> F 92472 07089>> F 92473 00249>>		3	
10	477 827 033	housing	/L	1	
(10)	477 827 034	housing	/R	1	
11	477 827 035	rubber mounting		2	
12	999 219 011 07	countersunk-head screw M 6 X 16		4	
13	477 827 527	lock pin		2	
14	N 011 008 8	hexagon nut M 8		2	
15	900 027 015 02	lock ring B 8		2	
19	N 011 525 13	washer A 8,4		1	
(20)	477 827 365 A	gasket lower part	/L	1	
(20)	477 827 366 A	gasket lower part	/R	1	
21	951 512 447 00	reinforcement plate		2	
22	477 827 505 A	rear lid lock	/L	1	
(22)	477 827 506 A	rear lid lock	/R	1	
23	477 827 541	water drip pan		2	
24	477 827 547	hose 400 MM		2	
25	111 971 911 A	rubber sleeve		2	
26	900 076 010 02	hexagon nut M 6		4	
27	N 012 006 4	lock ring B 6		4	
28	477 827 529 A	sealing ring		1	
29	477 898 082	lock cylinder w/o stipulated lock number		1	
(29)	477 827 573 B	lock cylinder with stipulated lock-no.		1	
30	N 014 139 5	oval-head screw M 6 X 12		2	
30A	N 012 007 02	lock ring A 6		2	
31	477 827 583	pull rod		2	
32	993 531 563 00	linkage clip		2	
33	944 512 043 00	seal for rear flap		1	
-	999 591 342 02	u-clamp		4	
34	477 827 555	rear spoiler		1	TURBO

Pos	Part Number	Name	Remarks	Qty	Model
35	N 033 183 1	countersunk-head screw M 5 X 20		7	TURBO
36	477 827 453 A	washer		7	TURBO
37	477 827 557	rear spoiler	/L	1	TURBO
38	477 827 558	rear spoiler	/R	1	TURBO
39	N 033 185 1	countersunk-head screw M 4 X 16		2	TURBO
40	N 021 255 1	slotted nut M 4		12	TURBO
41	477 845 333	screw plug		1	TURBO
42	477 955 439	grommet		2	TURBO
43	477 845 331	washer		1	TURBO
44	N 011 118 14	hexagon nut M 8		1	TURBO
		- -- E N D -- -			

Pos	Part Number	Name	Remarks	Qty	Model

Model	Year	MG	SG	Illustration	Restrictions	Update				
924	79	8	04	804-00		187	11:10	06.04.2005	PORSCHE	PET	PORSCHE

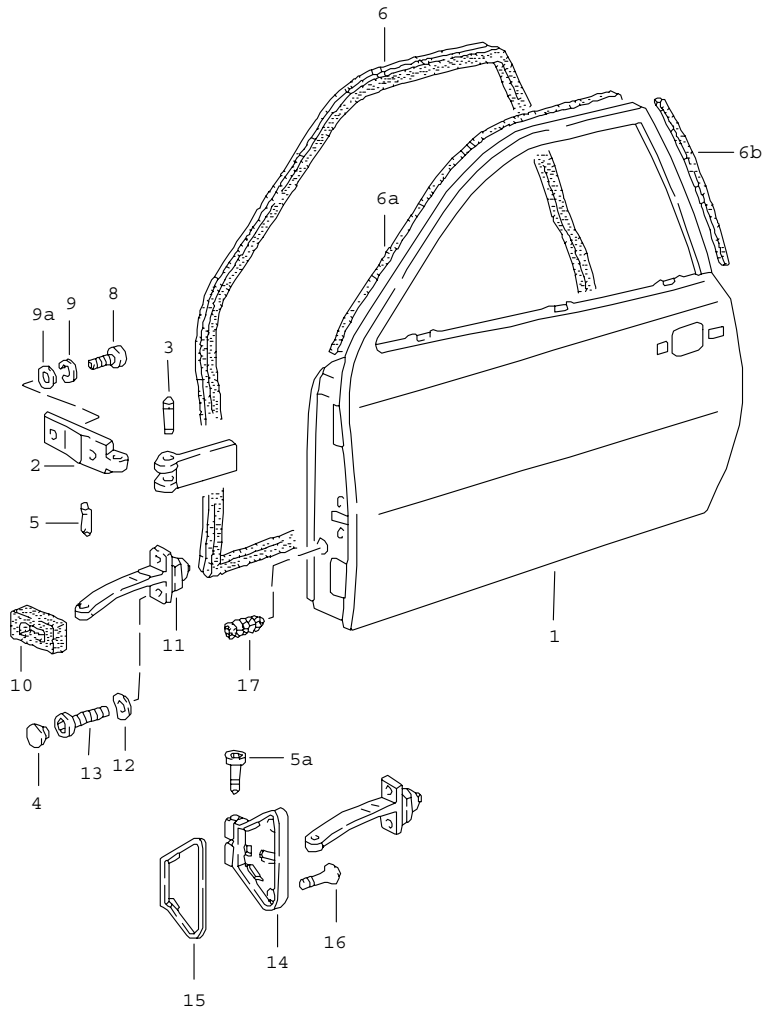

Pos	Part Number	Name	Remarks	Qty	Model
		door			
(1)	477 831 051 H	door in white	/L	1	
(1)	477 831 052 H	door in white	/R	1	
-	477 831 139 C	reinforcement door mirror electric	/L	1	
-	477 831 140 C	reinforcement door mirror electric	/R	1	
-	928 531 235 03	threaded piece F 92481 02503>>		1	
-	N 013 295 1	tensioning sleeve F 92481 02503>>		1	
-	477 831 136	reinforcement door mirror F >>92481 02502	/R	1	
-	477 831 137	reinforcement angle		X	
2	171 831 403	hinge half		4	
3	321 831 421	hinge pin		4	
4	411 837 111	cap F >>92481 04548		4	
5	823 837 257	bolt F >>92481 04548		2	
5A	928 537 419 03	pan-head screw F 92481 04549>>		2	
6	944 537 091 00	door seal	/L	1	
(6)	944 537 092 00	door seal	/R	1	
6A	477 837 233	additional gasket		2	
6B	477 837 235	additional gasket		2	
8	900 119 052 02	pan-head screw M 8 X 15		8	
9	900 027 015 02	lock ring B 8		8	
9A	823 711 815	washer		8	
10	477 837 483	gasket F >>92481 04548		2	

Pos	Part Number	Name	Remarks	Qty	Model
11	A 944 537 609 00	door support		2	
11	944 537 609 00	door support		2	
12	N 011 524 7	washer B 6		4	
13	900 067 009 02	pan-head screw M 6 X 15		4	
14	928 537 417 02	bearing bracket F 92481 04549>>	/L	1	
(14)	928 537 418 02	bearing bracket F 92481 04549>>	/R	1	
15	928 537 425 02	desk pad bearing bracket F 92481 04549>>	/L	1	
(15)	928 537 426 02	desk pad bearing bracket F 92481 04549>>	/R	1	
16	928 537 459 02	oval-head screw M 6 X 20 F 92481 04549>>		4	
17	477 971 910	bellows		2	
		- -- E N D -- -			

Model	Year	MG	SG	Illustration	Restrictions	Update				
924	79	8	04	804-05		187	11:10	06.04.2005	PORSCHE	PET	PORSCHE

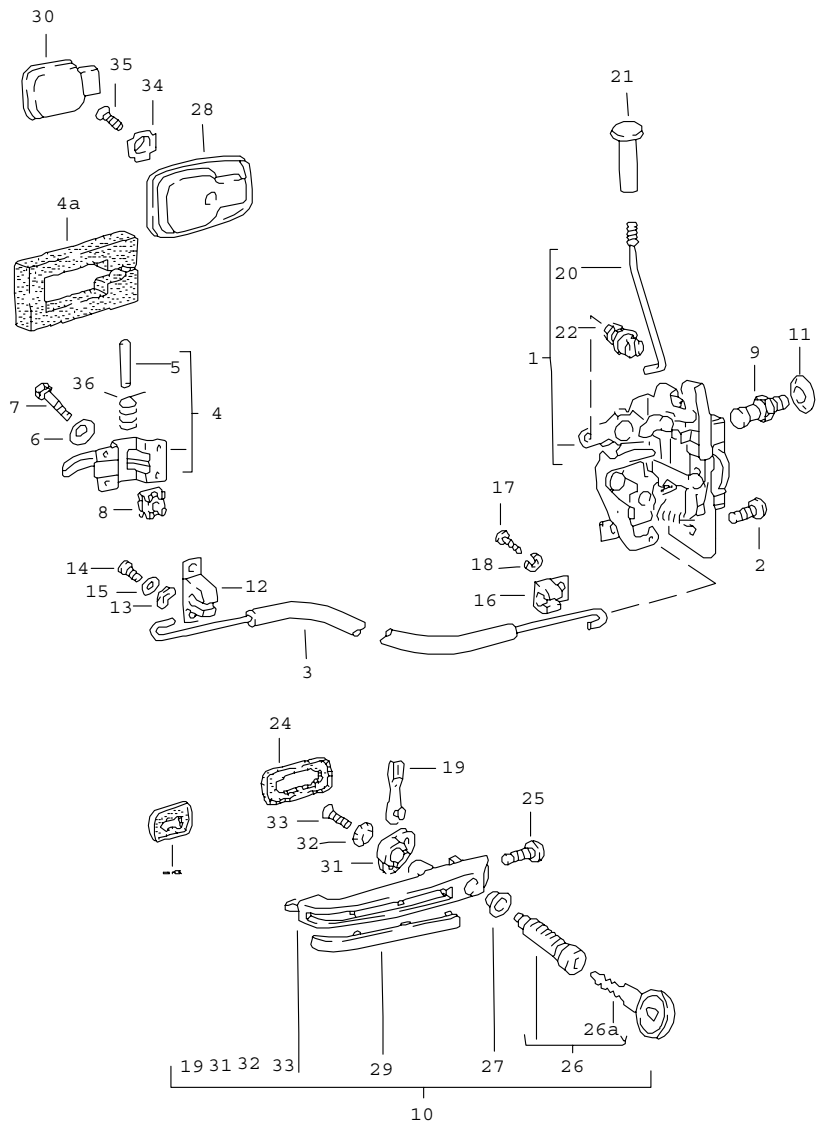

Pos	Part Number	Name	Remarks	Qty	Model
		installation parts door door lock			
1	477 837 015 A	door lock	/LL /L	1	
(1)	478 837 015 A	door lock	/RL /L	1	
(1)	477 837 015 A	door lock	/LL /L	1	M 190
(1)	478 837 015 A	door lock	/RL /L	1	(AUS)
(1)	477 837 016 A	door lock	/LL /R	1	
(1)	478 837 016 A	door lock	/RL /R	1	
(1)	477 837 016 A	door lock	/LL /R	1	M 190
(1)	478 837 016 A	door lock	/RL /R	1	(AUS)
2	N 014 139 5	oval-head screw M 6 X 10		8	
-	111 837 941	cup spring		8	
3	477 837 017	bowden cable		2	
4	171 837 019	inner door release	/L	1	
	041	black			
	90V	brown			
(4)	171 837 020	inner door release	/R	1	
	041	black			
	90V	brown			
4A	477 831 304 A	seal		2	
5	N 013 666 1	rivet B 4 X 32		2	
6	111 837 941	cup spring 6,4 X 12,5		8	
7	N 010 210 13	hexagon-head bolt M 6 X 10		8	
8	477 837 521	captive nut M 6		8	
9	823 837 035 A	lock pin		2	

Pos	Part Number	Name	Remarks	Qty	Model
10	E 477 837 037	door handle chrome with lock cylinder F >>92481 00208		2	
10	477 837 037 B	door handle black with lock cylinder F 92481 00209>>		2	
11	823 837 057 A	spring washer 12 X 32		2	
12	477 837 115 A	support		2	
13	N 011 524 7	washer B 6		4	
14	N 014 139 7	oval-head screw M 6 X 12		4	
15	N 011 524 7	washer A 6,4		4	
16	477 837 117	support		2	
17	N 013 957 5	tapping screw BZ 3,5 X 9,5		2	
18	N 012 004 2	lock ring B 4		2	
19	823 837 137	connecting piece		2	
20	477 837 183	locking rod		2	
21	111 837 187 B	knob		2	
	043	black			
22	171 837 199 A	clip		2	
23	171 837 209 A	desk pad		2	
24	171 837 211 A	desk pad		2	
25	803 837 951	self-lock. fillister screw		2	
(26)	944 538 903 00	lock cylinder with keys w/o stipulated lock number		2	
26	944 538 903 01	lock cylinder with stipulated lock-no.		2	

Pos	Part Number	Name	Remarks	Qty	Model
-	-	grease for lock cylinder see group 0/05/00			
26A	477 837 219	blank key		2	
26A	944 538 933 00	key with stipulated lock-no.		1	
27	111 837 227 B	sealing ring lock cylinder		2	
28	111 837 239 B	rose	-78	2	924
	01C	black			
28	171 837 235	rose	79-	2	
	01C	black			
	90V	brown			
29	823 837 239	cover		2	
30	311 837 247	finger plate		2	
	043	black			
	90V	brown			
31	477 837 511	driver		2	
32	N 012 116 1	serrated lock washer V 4,3		2	
33	N 011 734 1	countersunk-head screw AM 4 X 8		2	
33	N 033 165 1	countersunk-head screw AM 4 X 8		2	
34	111 837 291	cone washer		2	
35	N 014 216 1	countersunk-head screw AM 5 X 10		2	
36	811 837 723	spring for operating lever		2	
		- -- E N D -- -			

Model	Year	MG	SG	Illustration	Restrictions	Update				
924	79	8	04	804-10		187	11:10	06.04.2005	PORSCHE	PET	PORSCHE

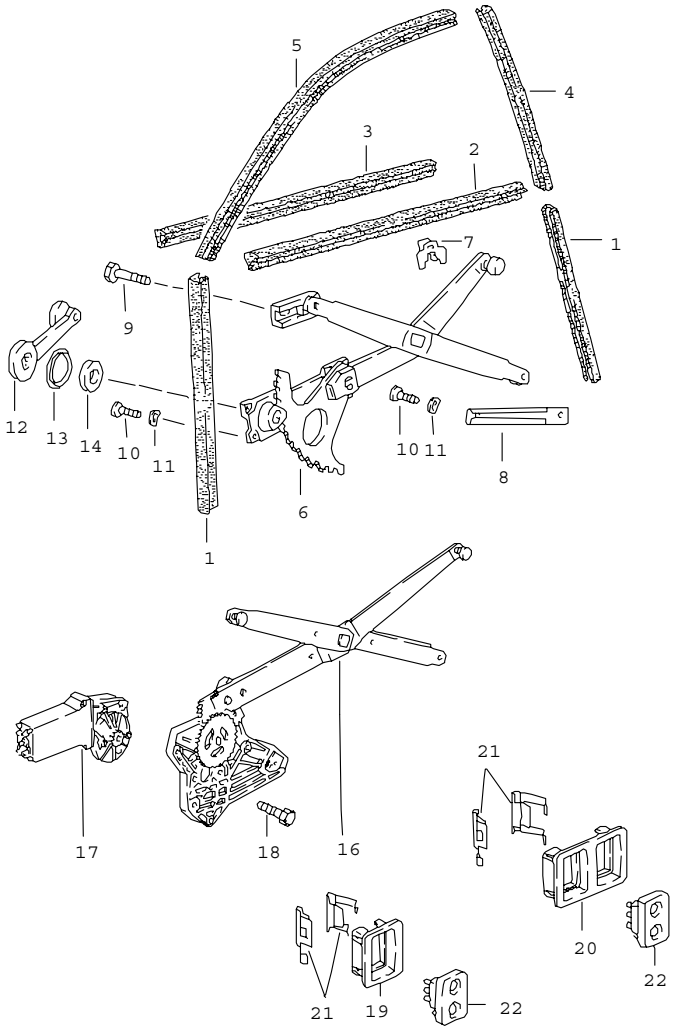

Pos	Part Number	Name	Remarks	Qty	Model
		installation parts door glass power windows			
1	477 837 385	window guide		4	
2	477 837 469 A	sealing outer	/L	1	
(2)	477 837 470 A	sealing outer	/R	1	
3	477 837 471 A	seal inner		2	
4	477 837 479 A	window guide	/H	2	
5	477 837 493 A	window guide	/L	1	
(5)	477 837 494 A	window guide	/R -77	1	924
(5)	477 837 494 A	window guide	/R 78-	1	
6	477 837 441	power windows F >>92481 05005	/L	1	924
(6)	477 837 441 A	power windows F 92481 05006>>	/L	1	
(6)	E 477 837 442	power windows F >>92481 05005	/R	1	924
(6)	477 837 442 A	power windows F 92481 05006>>	/R	1	
7	171 837 485	clamp		10	
8	477 837 589	guide rail		2	
9	900 075 079 02	hexagon-head bolt M 8 X 22		2	
10	N 014 139 5	oval-head screw M 6 X 10		12	
11	N 011 524 7	washer B 6		12	
12	321 837 581	window crank		2	
	01C	black			
	90V	brown			
13	111 837 595 A	desk pad		2	
	01C	black			

Pos	Part Number	Name	Remarks	Qty	Model
	90V	brown			
14	411 837 447	gasket		2	
16	477 837 391 C	cross-arm power window	/L	1	
(16)	477 837 392 C	cross-arm power window	/R	1	
17	477 959 123 A	engine and transmission	/L	1	
(17)	477 959 124 A	engine and transmission	/R	1	
18	N 014 228 4	countersunk-head screw AM 6 X 12		6	
-	477 837 397	stop upper	/L	1	
-	477 837 398	stop	/R	1	
-	477 837 397	stop lower	/R	1	
-	477 837 398	stop	/L	1	
19	477 867 185	mounting piece		1	
	01C	black			
20	477 867 187	mounting piece		1	
	01C	black			
21	477 867 189	spring clamp		4	
22	477 959 622	tip switch		3	
	01C	black			
		electric line power window			
-	E 477 971 160	harness dashboard	/LL -78	1	924
-	477 971 160 A	harness dashboard	/LL 79-	1	
-	E 478 971 160	harness dashboard	/RL -78	1	
-	945 612 031 00	harness dashboard	/RL 79-	1	
-	477 971 161	harness driver's door		1	
-	477 971 162	harness passenger's door		1	
-	321 919 505	relay		1	
-	111 937 091 A	terminal with fuse		1	
-	N 017 121 5	safety fuse 25 A		1	
-	999 513 002 40	tie-wrap		2	
-	477 971 910	bellows		2	

- -- E N D -- -

Model	Year	MG	SG	Illustration	Restrictions	Update	11:10	06.04.2005	PORSCHE PET PORSCHE
924	79	8	05	805-00		187			

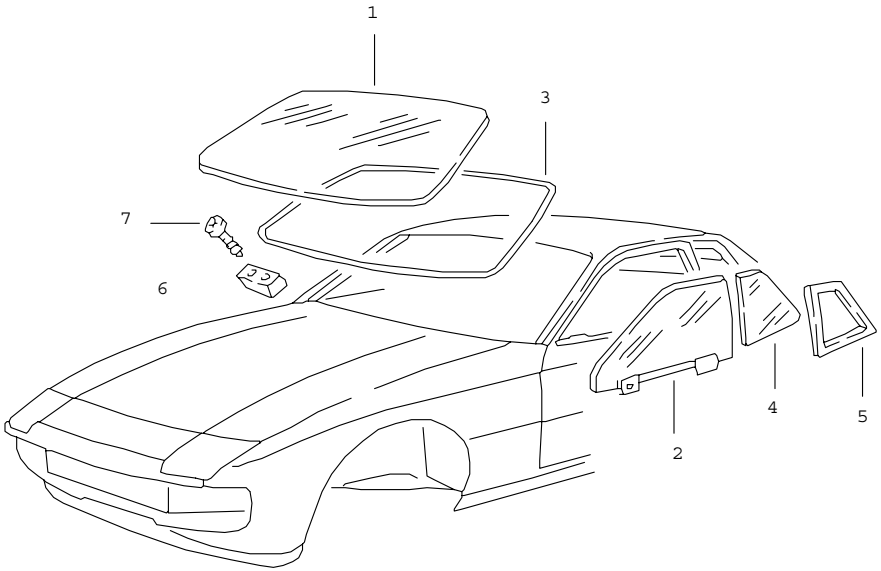

Pos	Part Number	Name	Remarks	Qty	Model
		windows			
1	477 845 011 D	windscreen		1	
(1)	A 477 845 011 E	windscreen tinted		1	
(1)	477 845 011 E	windscreen tinted		1	
-	477 845 043	adhesive plate for interior mirror		1	
2	477 845 023	door glass F >>92481 05005	/L	1	924
(2)	E 477 845 023 A	door glass tinted F >>92481 05005	/L	1	924
(2)	A 477 845 023 B	door glass F 92481 05006>>	/L	1	
(2)	E 944 542 023 00	door glass clear	/L	1	
(2)	944 542 023 01	door glass	/L	1	
(2)	944 542 023 01	door glass tinted	/L	1	
(2)	E 477 845 024	door glass F >>92481 05005	/R	1	924
(2)	477 845 024 A	door glass tinted F >>92481 05005	/R	1	924
(2)	944 542 024 00	door glass clear	/R	1	
(2)	944 542 024 01	door glass tinted	/R	1	
3	477 898 011 A	sealing set		1	
4	477 845 311	side window	/L/H	1	
(4)	477 845 311 A	side window tinted	/L/H	1	
(4)	477 845 312	side window	/R/H	1	
(4)	477 845 312 A	side window tinted	/R/H	1	
5	944 557 321 00	rubber seal	/L	1	

Pos	Part Number	Name	Remarks	Qty	Model
(5)	944 557 322 00	rubber seal	/R	1	
6	477 845 613 A	stop		2	
7	900 143 046 02	tapping screw B 4,8 X 16		4	
		- -- E N D -- -			

Pos	Part Number	Name	Remarks	Qty	Model

Model	Year	MG	SG	Illustration	Restrictions	Update				
924	79	8	06	806-00		187	11:11	06.04.2005	PORSCHE	PET	PORSCHE

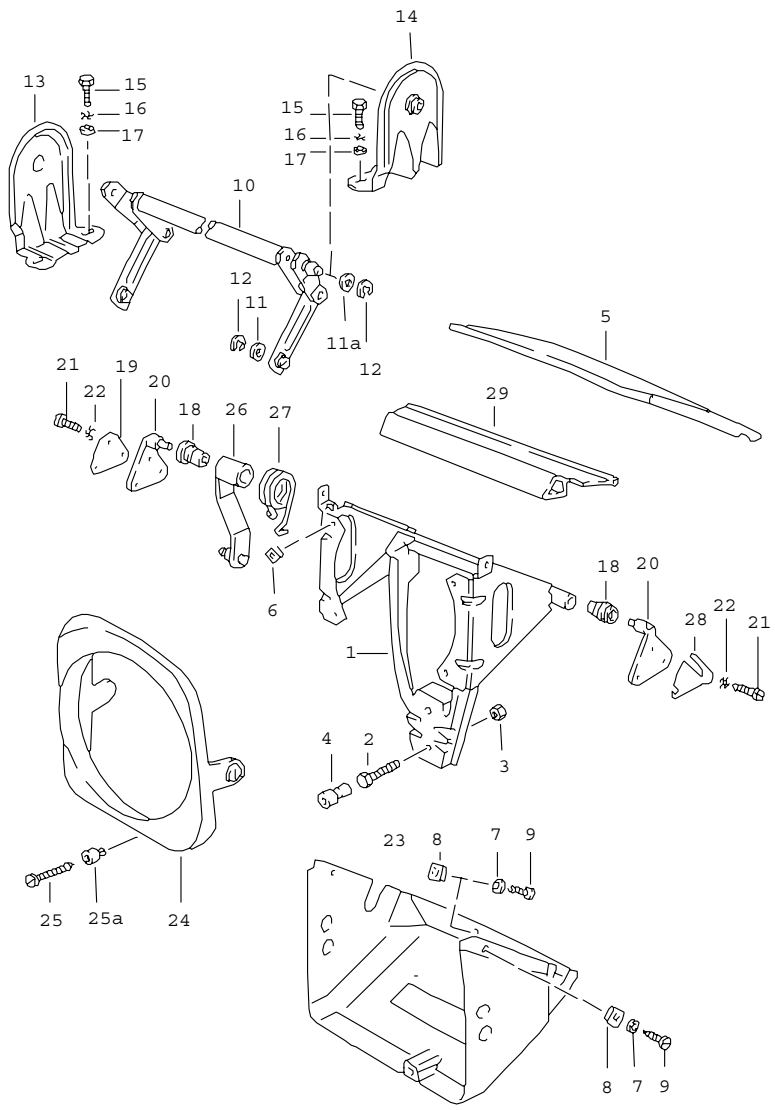

Pos	Part Number	Name	Remarks	Qty	Model
		pop-up headlight			
1	944 750 605 00	swivel frame	/L	1	
(1)	944 750 606 00	swivel frame	/R	1	
2	N 010 221 3	hexagon-head bolt M 6 X 35		2	
3	900 076 010 02	hexagon nut M 6		2	
4	914 504 319 00	grommet		2	
5	477 805 611	housing cover	/L	1	
(5)	477 805 612	housing cover	/R	1	
6	N 015 422 2	speed nut B 4,2 X 17		8	
6	999 507 252 02	nut B 3,9 X 16,5		8	
7	900 151 028 02	washer 4,1		4	
8	N 015 438 1	speed nut B 3,5 X 16,5		10	
9	N 014 086 4	tapping screw B 3,5 X 9,5		10	
10	477 805 615	control shaft		1	924
(10)	477 805 615	control shaft		1	TURBO
11	N 011 525 13	washer		3	
11A	477 805 695	washer		1	
12	N 012 436 2	lock washer 6		3	
13	477 805 617	bearing bracket		1	
14	477 805 622	bearing bracket		1	
15	N 010 215 13	hexagon-head bolt M 6 X 15		4	
16	N 012 105 3	serrated lock washer A 6,4		4	
17	N 011 524 7	washer A 6,4		4	
18	477 805 623	bush		4	

Pos	Part Number	Name	Remarks	Qty	Model
19	914 750 169 10	plate		4	
20	914 750 271 10	bearing bracket		4	
21	N 014 750 3	pan-head screw M 6 X 10		12	
22	N 012 105 3	serrated lock washer A 6,4		12	
23	944 750 631 00	housing		1	
(23)	944 750 632 00	housing		1	
24	477 805 633	retaining ring		1	
(24)	477 805 634	retaining ring		1	
25	N 043 979 2	tapping screw BZ 4,2 X 45		2	
25A	477 857 173	clip		2	
26	477 805 651	lever		2	
27	477 805 661	spring		1	
(27)	477 805 662	spring		1	
28	477 805 663	desk pad		X	
29	477 853 363	cover strip		1	
(29)	477 853 364	cover strip		1	
		- -- E N D -- -			

Pos	Part Number	Name	Remarks	Qty	Model

Model	Year	MG	SG	Illustration	Restrictions	Update				
924	79	8	07	807-00		187	11:11	06.04.2005	PORSCHE	PET	PORSCHE

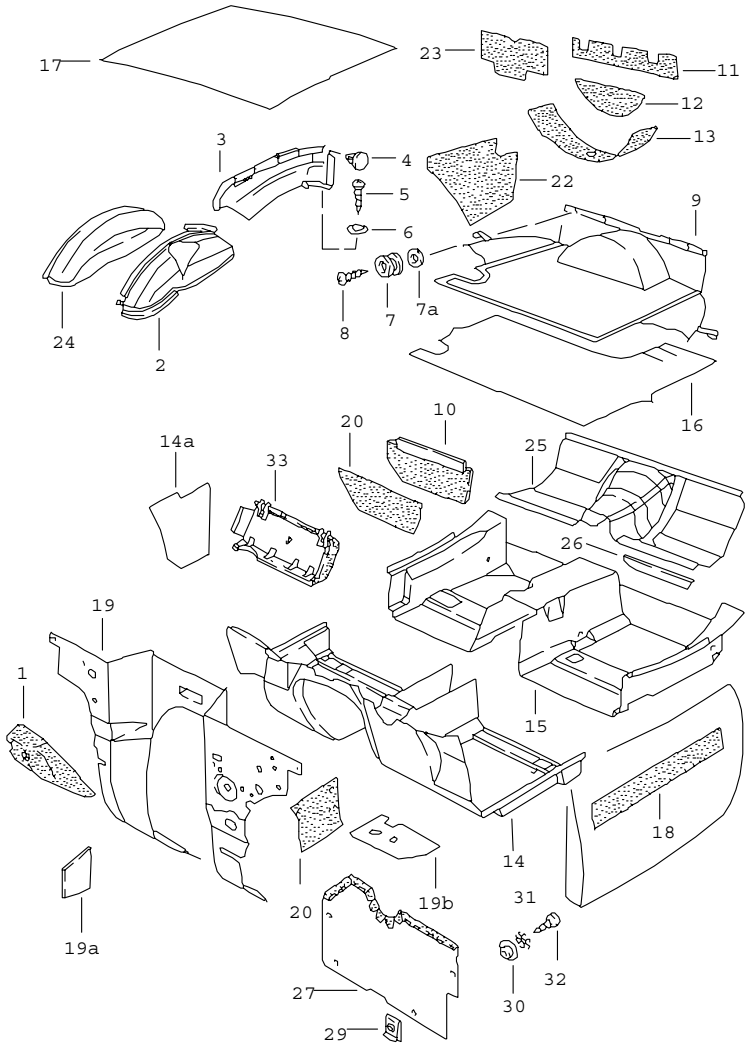

Pos	Part Number	Name	Remarks	Qty	Model
		linings front carpet			
1	E 477 857 718	foot support	/LL -77	1	924
(2)	477 863 067 A	lining wheel housing	/L/H	1	
	07W	black	76-77		
	92V	dark brown	76-77		
	24U	red	77		
	43S	black	78-		
	83S	beige	78-		
	87S	brown	78-		
	2NT	cork	79		
2	477 863 068 A	lining wheel housing	/R/H	1	
	07W	black	76-77		
	92V	dark brown	76-77		
	24U	red	77		
	43S	black	78-		
	83S	beige	78-		
	87S	brown	78-		
	2NT	cork	79		
(3)	477 863 083 C	side trim panel	/L/H	1	924
	07W	black	76-77		
	92V	dark brown	76-77		
	24U	red	77		
	43S	black	78		
	83S	beige	78		
	87S	brown	78		
3	477 863 084 A	side trim panel	/R/H	1	924
	07W	black	76-77		

Pos	Part Number	Name	Remarks	Qty	Model
	92V	dark brown	76-77		
	24U	red	77		
	43S	black	78		
	83S	beige	78		
	87S	brown	78		
(3)	477 863 083 D	side trim panel	/L/H	1	
	43S	black	79-		
	87S	brown	79-		
	83S	beige	79-		
	2NT	cork	79		
(3)	477 863 084 B	side trim panel	/R/H	1	
	43S	black	79-		
	87S	brown	79-		
	83S	beige	79-		
	2NT	cork	79		
4	477 863 747	clip		12	
	01C	black	76-		
	90V	brown	76-		
5	N 014 087 5	rais. counters. h. tap. s. B 3,5 X 16		2	
6	N 011 578 1	cone washer 3,7		2	
7	968 555 901 00	set of fastening parts		6	
7A	900 151 027 02	washer 5,3		6	
8	N 013 957 5	tapping screw B 3,5 X 9,5		6	
9	477 863 463 A	lining boot floor plate		1	924
	07W	black	76-77		
	92V	dark brown	76-77		
	24U	red	77		
	43S	black	78		
	83S	beige	78		
	87S	brown	78		
(9)	477 863 463 K	lining boot floor plate		1	924
	43S	black	79-		
	87S	brown	79-		
	83S	beige	79-		
	2NT	cork	79		
(9)	477 863 463 D	lining boot floor plate with collapsible tire		1	924
	07W	black	76-77		
	92V	dark brown	76-77		
(9)	477 863 463 E	lining boot floor plate with collapsible tire		1	924
	24U	red	77		
	43S	black	78		
	83S	beige	78		
	87S	brown	78		
(9)	477 863 463 J	lining boot floor plate with collapsible tire		1	
	43S	black	79-		
	87S	brown	79-		
	83S	beige	79-		
	2NT	cork	79		
(10)	477 863 571 A	lining heel plate	/L	1	
	07W	black	76-77		
	92V	dark brown	76-77		
	24U	red	77		

Pos	Part Number	Name	Remarks	Qty	Model
	43S	black	77-		
	83S	beige	77-		
	87S	brown	77-		
	2NT	cork	79		
10	477 863 572 A	lining heel plate	/R	1	
	07W	black	76-77		
	92V	dark brown	76-77		
	24U	red	77		
	43S	black	77-		
	83S	beige	77-		
	87S	brown	77-		
	2NT	cork	79		
13	E 477 863 672	insulation spare-wheel well lower		1	
14	477 863 703 E	floor mat	/LL/V	1	924
	07W	black	76-77		
	92V	dark brown	76-77		
	24U	red	77		
	43S	black	77-		
	83S	beige	77-		
	87S	brown	77-		
	2NT	cork	79		
(14)	477 863 703 G	floor mat	/LL/V	1	TURBO
	43S	black	79-		
	83S	beige	79-		
	87S	brown	79-		
(14)	477 863 703 L	floor mat	/LL/V	1	924:M 573
	43S	black	79-		
	83S	beige	79-		
	87S	brown	79-		
	2NT	cork	79		
(14)	477 863 703 M	floor mat	/LL/V	1	TURBO:M 573
	43S	black	79-		
	83S	beige	79-		
	87S	brown	79-		
(14)	478 863 703 C	floor mat	/RL/V	1	924
	07W	black	77		
	92V	dark brown	77		
	24U	red	77		
	43S	black	78-		
	83S	beige	78-		
	87S	brown	78-		
	2NT	cork	79		
-	E 477 863 855	insulation firewall		1	
14A	477 863 581 A	lining lateral	/V/L	1	
	07W	black	76-77		
	92V	dark brown	76-77		
	24U	red	77		
	43S	black	78-		
	83S	beige	78-		
	87S	brown	78-		
	2NT	cork	79		
(14A)	477 863 582 A	lining lateral	/V/R	1	
	07W	black	76-77		
	92V	dark brown	76-77		
	24U	red	77		
	43S	black	78-		

Pos	Part Number	Name	Remarks	Qty	Model
	83S	beige	78-		
	87S	brown	78-		
	2NT	cork	79		
(14A)	477 863 582 B	lining lateral	/LL/R	1	M 573
	43S	black	79-		
	83S	beige	79-		
	87S	brown	79-		
	2NT	cork	79		
15	477 863 717 A	floor mat	/LL/H	1	924
	07W	black	76-77		
	92V	dark brown	76-77		
	24U	red	77		
	43S	black	78-		
	83S	beige	78-		
	87S	brown	78-		
	2NT	cork	79		
(15)	477 863 717 B	floor mat	/LL/H	1	TURBO
	43S	black	79-		
	83S	beige	79-		
	87S	brown	79-		
(15)	478 863 717 A	floor mat	/RL/H	1	924
	07W	black	77		
	92V	dark brown	77		
	24U	red	77		
	43S	black	78-		
	83S	beige	78-		
	87S	brown	78		
	2NT	cork	79		

Pos	Part Number	Name	Remarks	Qty	Model
16	477 863 799	sound absorber boot floor plate		1	
(16)	477 863 893 A	sound absorber boot floor plate		1	
17	944 556 609 00	sound absorber roof		1	
18	993 556 521 00	insulation		2	
19	944 556 089 00	insulation pour engine compartment	/LL	1	
(19)	478 863 831	insulation pour engine compartment	/RL	1	924
19A	477 863 871	heat protection side member	/V/R	1	
19B	477 863 849	insulation	/L/V	1	
20	477 863 837	sound absorber side section	/V/L	1	
(20)	477 863 838	sound absorber side section	/V/R	1	
(21)	E 477 863 845	sound absorber heel plate F >>92481 00776	/L	1	924
(21)	477 863 845 A	sound absorber heel plate F 92481 00777>>	/L	1	
21	E 477 863 846	sound absorber heel plate F >>92481 00776	/R	1	924
21	477 863 846 A	sound absorber heel plate F 92481 00777>>	/R	1	
(22)	477 863 865	sound absorber	/H/L	1	
22	477 863 866	sound absorber side section	/H/R	1	
23	477 863 867	insulation spare-wheel well		1	
(24)	477 863 885	sound absorber	/H/L	1	
24	477 863 886	sound absorber wheel housing	/H/R	1	

Pos	Part Number	Name	Remarks	Qty	Model
25	E 477 863 895	sound absorber seat well		1	924
26	944 556 085 00	sound absorber cross member F 92481 00777>>	/L	1	
(26)	944 556 086 00	sound absorber cross member F 92481 00777>>	/R	1	
27	478 863 711 A	foot support	/RL	1	M 573
	43S	black	78-		
	83S	beige	78-		
	87S	brown	78-		
29	N 015 458 1	speed nut	/RL	4	M 573
30	901 423 368 00	washer	/RL	4	M 573
31	N 012 130 2	shake-proof washer A 5,3	/RL	4	M 573
32	N 013 968 7	tapping screw 4,8 X 13	/RL	4	M 573
33	477 820 412	knee protection trim	/RL 79-	1	M 573
	05T	black			
	21S	brown			
		- -- E N D -- -			

Pos	Part Number	Name	Remarks	Qty	Model

Model	Year	MG	SG	Illustration	Restrictions	Update			
924	79	8	07	807-01		187	11:11	06.04.2005	PORSCHE PET PORSCHE

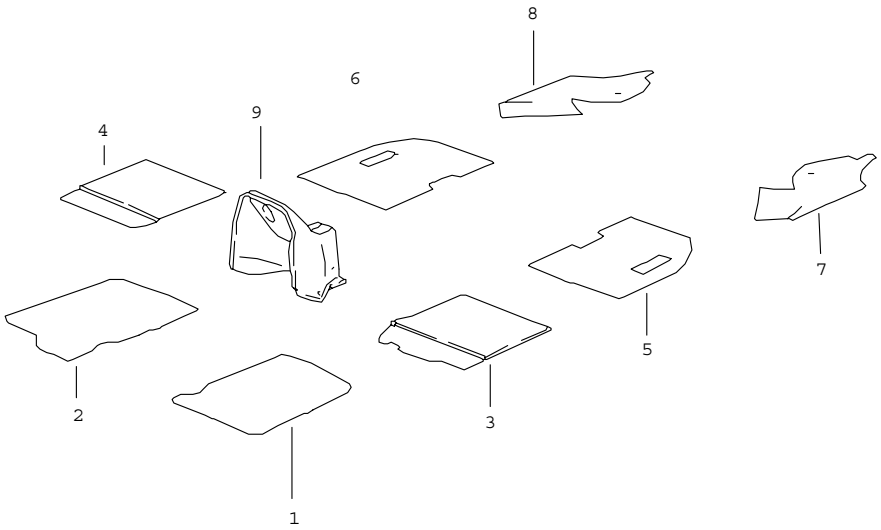

Pos	Part Number	Name	Remarks	Qty	Model
		sound absorber left-hand drive			TURBO
1	477 863 771	sound absorber engine compartment	/L	1	
2	477 863 772 A	sound absorber engine compartment	/R	1	
3	477 863 775	sound absorber floor	/L/V	1	
4	477 863 776	sound absorber	/R	1	
5	477 863 773	sound absorber floor	/L/H	1	
6	477 863 774	sound absorber	/R	1	
7	944 556 777 01	sound absorber	/L/H	1	
8	477 863 778	sound absorber	/R/H	1	
9	E 477 863 667 A	sound absorber	/V	1	
		- -- E N D -- -			

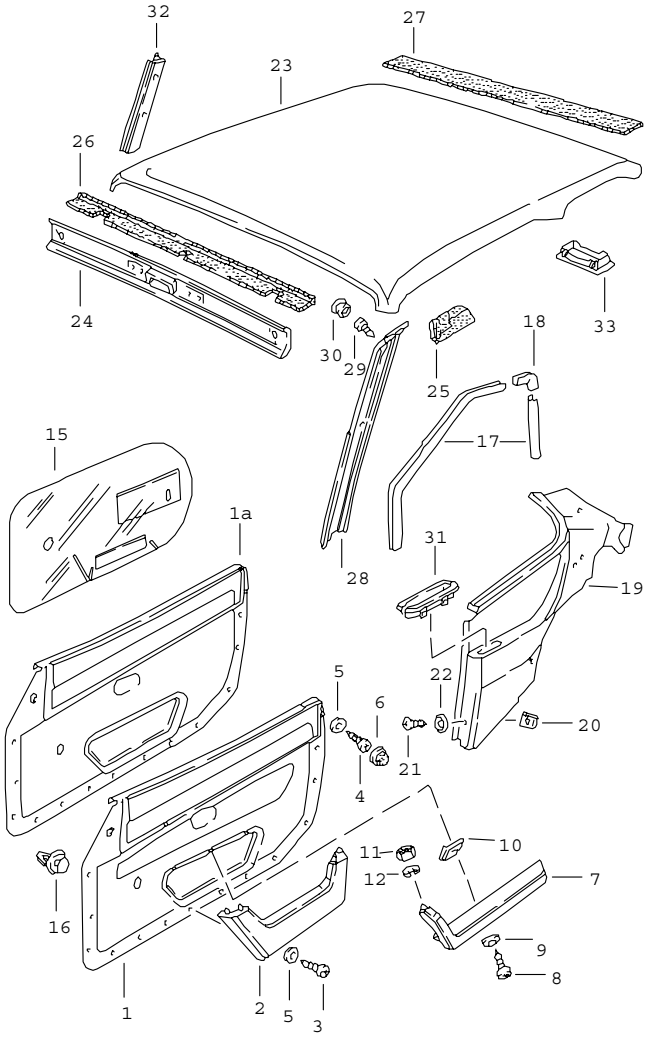

Pos	Part Number	Name	Remarks	Qty	Model
		linings			
(1)	477 867 011 F	door trim panel power windows manually adjustable leatherette	/L	1	
	CD4	black/anthracite	76-77		
	CG8	gazelle/saddle tan	76-77		
	CJ6	black	77		
	DF9	black F >>92481 02502 F >>92482 04108 F >>92483 30204			
	DG1	brown F >>92481 02502 F >>92482 04108 F >>92483 30204			
	DG2	beige/brown F >>92481 02502 F >>92482 04108 F >>92483 30204			
1	477 867 012 F	door trim panel power windows manually adjustable leatherette	/R	1	
	CD4	black/anthracite	76-77		
	CG8	gazelle/saddle tan	76-77		
	CJ6	black	77		
	DF9	black F >>92481 02502 F >>92482 04108 F >>92483 30204			
	DG1	brown F >>92481 02502 F >>92482 04108 F >>92483 30204			
	DG2	beige/brown F >>92481 02502 F >>92482 04108 F >>92483 30204			
(1A)	477 867 011	door trim panel power windows manually adjustable leatherette	/L	1	

Pos	Part Number	Name	Remarks	Qty	Model
	DF9	black F 92481 02503>> F 92482 04109>> F 92483 30205>>			
	DG1	brown F 92481 02503>> F 92482 04109>> F 92483 30205>>			
	DG2	beige/brown F 92481 02503>> F 92482 04109>> F 92483 30205>>			
1A	477 867 012	door trim panel power windows manually adjustable leatherette	/R	1	
	DF9	black F 92481 02503>> F 92482 04109>> F 92483 30205>>			
	DG1	brown F 92481 02503>> F 92482 04109>> F 92483 30205>>			
	DG2	beige/brown F 92481 02503>> F 92482 04109>> F 92483 30205>>			
(1A)	477 867 011	door trim panel leatherette/ cloth FISCHGRAET	/L	1	
	EH4	black/ black-white	79-		
	EH5	black/ orange	79-		
	EH6	brown/ brown-beige	79-		
1A	477 867 012	door trim panel leatherette/ cloth FISCHGRAET	/R	1	
	EH4	black/ black-white	79-		
	EH5	black/ orange	79-		
	EH6	brown/ brown-beige	79-		
(1A)	477 867 011	door trim panel leatherette/ pin stripe velour	/L	1	
	EQ5	brown/ cork	79		
1A	477 867 012	door trim panel leatherette/ pin stripe velour	/R	1	
	EQ5	brown/ cork	79		
(1A)	477 867 011	door trim panel leatherette/ tartan cloth	/L	1	
	EN4	black/ red-blue	/LL 79		TURBO
	EP4	black/ green-blue	/LL 79		TURBO
	EP5	brown/ brown-beige	/LL 79		TURBO
1A	477 867 012	door trim panel leatherette/ tartan cloth	/R	1	
	EN4	black/ red-blue	/LL 79		TURBO
	EP4	black/ green-blue	/LL 79		TURBO
	EP5	brown/ brown-beige	/LL 79		TURBO
(1A)	477 867 011 B	door trim panel power windows electrically adjustable leatherette	/LL/L	1	
	DF9	black	78-		
	DG1	brown	78-		
	DG2	beige/brown	78-		

Pos	Part Number	Name	Remarks	Qty	Model
(1A)	477 867 012 B	door trim panel power windows electrically adjustable leatherette	/LL/R	1	
	DF9	black	78-		
	DG1	brown	78-		
	DG2	beige/brown	78-		
(1A)	478 867 011 B	door trim panel power windows electrically adjustable leatherette	/RL/L	1	
	DF9	black	78-		
	DG1	brown	78-		
	DG2	beige/brown	78-		
(1A)	478 867 012 B	door trim panel power windows electrically adjustable leatherette	/RL/R	1	
	DF9	black	78-		
	DG1	brown	78-		
	DG2	beige/brown	78-		
(1A)	477 867 011 B	door trim panel leatherette/ cloth FISCHGRAET	/LL/L	1	
	EH4	black/ black-white	79-		
	EH5	black/ orange	79-		
	EH6	brown/ brown/beige	79-		
	EQ5	brown/ cork	79		
	EP4	black/ green-blue	/LL 79		TURBO
	EP5	brown/ brown-beige	/LL 79		TURBO
(1A)	477 867 012 B	door trim panel leatherette/ cloth FISCHGRAET	/LL/R	1	
	EH4	black/ black-white	79-		
	EH5	black/ orange	79-		
	EH6	brown/ brown/beige	79-		
	EQ5	brown/ cork	79		
	EP4	black/ green-blue	/LL 79		TURBO
	EP5	brown/ brown-beige	/LL 79		TURBO
(1A)	478 867 011 B	door trim panel leatherette/ cloth FISCHGRAET	/RL/L	1	
	EH4	black/ black-white	79-		
	EH5	black/ orange	79-		
	EH6	brown/ brown/beige	79-		
	EQ5	brown/ cork	79		
	EP4	black/ green-blue	/LL 79		TURBO
	EP5	brown/ brown-beige	/LL 79		TURBO
(1A)	478 867 012 B	door trim panel leatherette/ cloth FISCHGRAET	/RL/R	1	
	EH4	black/ black-white	79-		
	EH5	black/ orange	79-		

Pos	Part Number	Name	Remarks	Qty	Model
	EH6	brown/ brown/beige	79-		
	EQ5	brown/ cork	79		
	EP4	black/ green-blue	/LL 79		TURBO
	EP5	brown/ brown-beige	/LL 79		TURBO
(1A)	477 867 011 B	door trim panel leatherette/ pin stripe velour	/LL/L	1	
	EM7	black/	79		(F)
(1A)	477 867 011 B	door trim panel leatherette/ pin stripe velour	/LL/R	1	
	EM7	black/	79		(F)
(1A)	477 867 011 B	door trim panel leatherette/ tartan cloth	/LL/L	1	
	EN4	black/ red-blue	79		TURBO
(1A)	477 867 011 B	door trim panel leatherette/ tartan cloth	/LL/R	1	
	EN4	black/ red-blue	79		TURBO
(1A)	477 867 011 B	door trim panel	/LL/L	1	
(1A)	477 867 011 B	door trim panel	/LL/R	1	
-	999 507 071 00	speed nut		2	
(2)	477 867 133	package box	/L	1	
	90V	saddle tan	76-77		
	01C	black	76-		
	89S	cadbury brown	78-		
2	477 867 134	package box	/R	1	
	90V	saddle tan	76-77		
	01C	black	76-		
	89S	cadbury brown	78-		
3	N 013 962 2	tapping screw B 3,9 X 16		6	
4	311 867 167	tapping screw 4,2		4	
5	900 151 028 02	washer 4,3		10	
6	311 867 169	cap		4	
	01C	black	76-		
	90V	brown	76-		
(7)	477 867 171	armrest	/L	1	
	041	black	76-		
	90V	saddle tan	76-77		
	89S	brown	78-		
7	477 867 172	armrest	/R	1	
	041	black	76-		
	90V	saddle tan	76-77		
	89S	brown	78-		
8	900 143 046 02	tapping screw B 4,8 X 16		6	
9	N 012 225 2	spring washer B 5		6	
10	999 591 722 02	speed nut B 4,8 X 19,8		6	
11	900 076 010 02	hexagon nut M 6		2	
12	E N 012 026 1	lock ring 6		2	
(15)	477 867 177 D	sealing film	/L	1	
15	477 867 178 D	sealing film door trim panel	/R	1	
16	823 867 299	clip		25	
17	477 867 367	piping door		4	

Pos	Part Number	Name	Remarks	Qty	Model
18	477 867 371	end piece		2	
(19)	477 867 421	lining side section	/L	1	
	91V	saddle tan	76-77		
	05T	black	76-		
	21S	brown	78-		
19	477 867 422	lining side section	/R	1	
	91V	saddle tan	76-77		
	05T	black	76-		
	21S	brown	78-		
-	111 857 785	plug		2	
-	111 857 795	cover disc		2	
20	N 015 438 1	speed nut B 3,5 X 16,5		2	
21	N 014 087 5	rais. counters. h. tap. s. B 3,5 X 16		4	
22	N 011 578 1	cone washer 3,7		4	
23	477 867 503	rooflining		1	
	041	black	76-77		
	90V	saddle tan	76-77		
	05T	black	78-		
	21S	brown	78-		
(23)	477 867 501 A	rooflining		1	M 650
	041	black	76-77		
	90V	saddle tan	76-77		
	05T	black	78-		
	21S	brown	78-		
-	477 867 543	bow		3	
24	477 867 511	lining roof frame		1	
	041	black	76-77		
	90V	saddle tan	76-77		
	05T	black	78		
	21S	brown	78		
(28)	477 867 554	lining F >>92481 00829 F >>92482 01329 F >>92483 30100 windscreen frame	/R	1	924
	041	black	76-77		
	90V	saddle tan	76-77		
	05T	black	78		
	21S	brown	78		
28	477 867 553 A	lining windscreen frame	/L	1	
	05T	black	78-		
	21S	brown	78-		
	041	black	76-77		
	90V	saddle tan	76-77		
(28)	477 867 554 A	lining F 92481 00830>> F 92482 01330>> F 92483 30101>> windscreen frame	/R	1	
25	E 944 555 115 00	roof frame padding	/L	1	
(25)	944 555 116 00	roof frame padding	/R	1	
26	477 867 531	roof frame padding centre	/V	1	M 650
27	477 867 533	roof frame padding	/H	1	M 650
28	477 867 553	lining windscreen frame	/L	1	924
	041	black	76-77		
	90V	saddle tan	76-77		
	05T	black	78		
	21S	brown	78		

Pos	Part Number	Name	Remarks	Qty	Model
	05T	black	78-		
	21S	brown	78-		
	041	black	76-77		
	90V	saddle tan	76-77		
29	N 013 962 2	tapping screw B 3,9 X 16		6	
30	914 552 233 10	filler piece		6	
	01C	black	76-		
	90V	brown	76-		
31	477 867 653	rose		2	
32	477 867 655	lining centre pillar	/L	1	
	041	black	76-77		
	90V	saddle tan	76-77		
	05T	black	78-		
	21S	brown	78-		
(32)	477 867 656	lining centre pillar	/R	1	
	041	black	76-77		
	90V	saddle tan	76-77		
	05T	black	78-		
	21S	brown	78-		
33	477 867 923	cap F >>92471 06849 F >>92472 33559 F >>92473 30159		2	
	01C	black	76-77		
	90V	saddle tan	76-77		
33	477 867 923 A	cap		2	
	01C	black	76-		
	90V	saddle tan	76-77		
	89S	brown	78-		

Pos	Part Number	Name	Remarks	Qty	Model
		- -- E N D -- -			

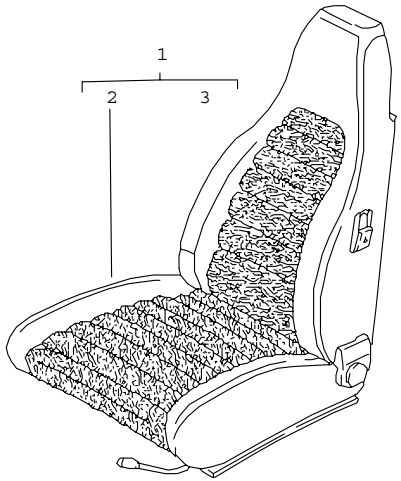

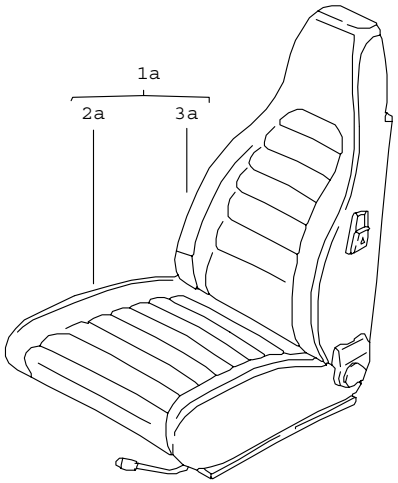

Pos	Part Number	Name	Remarks	Qty	Model
		front seat complete seat cover			
1	A 477 881 021 E	front seat leatherette/ centre part large checker pattern	/L	1	
	CC1	black/ black/yellow	76-77		
	CC2	black/ black/silver	76-77		
	CC4	gazelle/ saddle tan	76-77		
(1)	A 477 881 022 E	front seat leatherette/ centre part large checker pattern	/R	1	
	CC1	black/ black/yellow	76-77		
	CC2	black/ black/silver	76-77		
	CC4	gazelle/ saddle tan	76-77		
1	A 477 881 021 E	front seat leatherette/ centre part pin stripe velour	/L	1	
	DA8	black/ black	77		
	DA9	gazelle/ cork	77		
	BQ2	brown/ cork	78		(CH)
	EM6	black/ black	79		(F)
	EQ4	brown/ cork	79		
(1)	A 477 881 022 E	front seat leatherette/ centre part pin stripe velour	/R	1	

Pos	Part Number	Name	Remarks	Qty	Model
	DA8	black/ black	77		
	DA9	gazelle/ cork	77		
	BQ2	brown/ cork	78		(CH)
	EM6	black/ black	79		(F)
	EQ4	brown/ cork	79		
1	A 477 881 021 E	front seat leatherette/ centre part FISCHGRAET	/L	1	
	DC2	beige/ brown-beige	78-		
	DC5	brown/ brown-beige	78-		
	DC8	black/ orange	78-		
	DD1	black/ black-white	78-		
(1)	A 477 881 022 E	front seat leatherette/ centre part FISCHGRAET	/R	1	
	DC2	beige/ brown-beige	78-		
	DC5	brown/ brown-beige	78-		
	DC8	black/ orange	78-		
	DD1	black/ black-white	78-		
1	A 477 881 021 E	front seat leatherette/ centre part tartan cloth	/L	1	
	EN3	black/ red-blue	/LL 79		TURBO
	EP1	black/ green-blue	/LL 79		TURBO
	EP2	brown/ brown-beige	/LL 79		TURBO
	EP3	beige/ brown-beige	/LL 79		TURBO
(1)	A 477 881 022 E	front seat leatherette/ centre part tartan cloth	/R	1	
	EN3	black/ red-blue	/LL 79		TURBO
	EP1	black/ green-blue	/LL 79		TURBO
	EP2	brown/ brown-beige	/LL 79		TURBO
	EP3	beige/ brown-beige	/LL 79		TURBO
1	A 477 881 021 E	front seat	/L	1	
(1)	A 477 881 022 E	front seat	/R	1	
1A	A 477 881 021 F	front seat leatherette	/L	1	
	BG2	black	76-77		
	CC5	gazelle	76-77		
	DD2	beige	78-		
	DD4	brown	78-		
	DD6	black	78-		
(1A)	A 477 881 022 F	front seat leatherette	/R	1	
	BG2	black	76-77		
	CC5	gazelle	76-77		
	DD2	beige	78-		
	DD4	brown	78-		
	DD6	black	78-		
1A	A 477 881 021 H	front seat leather	/L	1	

Pos	Part Number	Name	Remarks	Qty	Model
	1AJ	black			
	2NF	beige			
	3NG	brown			
(1A)	A 477 881 022 H	front seat leather	/R	1	
	1AJ	black			
	2NF	beige			
	3NG	brown			
2	A 911 521 037 58	cover for cushion leatherette/ centre part large checker pattern	/L	1	
	CC1	black/ black/yellow	76-77		
	CC2	black/ black/silver	76-77		
	CC4	gazelle/ saddle tan	76-77		
(2)	A 911 521 038 58	cover for cushion leatherette/ centre part large checker pattern	/R	1	
	CC1	black/ black/yellow	76-77		
	CC2	black/ black/silver	76-77		
	CC4	gazelle/ saddle tan	76-77		
2	A 911 521 037 58	cover for cushion leatherette/ centre part pin stripe velour	/L	1	
	DA8	black/ black	77		
	DA9	gazelle/ cork	77		
	BQ2	brown/ cork	78		(CH)
	EM6	black/ black	79		(F)
	EQ4	brown/ cork	79		
(2)	A 911 521 038 58	cover for cushion leatherette/ centre part pin stripe velour	/R	1	
	DA8	black/ black	77		
	DA9	gazelle/ cork	77		
	BQ2	brown/ cork	78		(CH)
	EM6	black/ black	79		(F)
	EQ4	brown/ cork	79		
2	A 911 521 037 58	cover for cushion leatherette/ centre part FISCHGRAET	/L	1	
	DC2	beige/ brown-beige	78-		
	DC5	brown/ brown-beige	78-		
	DC8	black/ orange	78-		
	DD1	black/ black-white	78-		
(2)	A 911 521 038 58	cover for cushion leatherette/ centre part FISCHGRAET	/R	1	
	DC2	beige/ brown-beige	78-		
	DC5	brown/ brown-beige	78-		
	DC8	black/ orange	78-		

Pos	Part Number	Name	Remarks	Qty	Model
	DD1	black/ black-white	78-		
2	A 911 521 037 58	cover for cushion leatherette/ centre part tartan cloth	/L	1	
	EN3	black/ red-blue	/LL 79		TURBO
	EP1	black/ green-blue	/LL 79		TURBO
	EP2	brown/ brown-beige	/LL 79		TURBO
	EP3	beige/ brown-beige	/LL 79		TURBO
(2)	A 911 521 038 58	cover for cushion leatherette/ centre part tartan cloth	/R	1	
	EN3	black/ red-blue	/LL 79		TURBO
	EP1	black/ green-blue	/LL 79		TURBO
	EP2	brown/ brown-beige	/LL 79		TURBO
	EP3	beige/ brown-beige	/LL 79		TURBO
2	A 911 521 037 58	cover for cushion	/L	1	
(2)	A 911 521 038 58	cover for cushion	/R	1	
2	A 911 521 037 58	cover for cushion leatherette/ centre part flock cord	/L	1	
	DB1	black/ red	77		
(2)	A 911 521 038 58	cover for cushion leatherette/ centre part flock cord	/R	1	
	DB1	black/ red	77		
2A	A 911 521 037 69	cover for cushion welded version leatherette	/L	1	
	BG2	black	76-77		
	CC5	gazelle	76-77		
(2A)	A 911 521 038 69	cover for cushion welded version leatherette	/R	1	
	BG2	black	76-77		
	CC5	gazelle	76-77		
(2)	A 911 521 037 57	cover for cushion sewed version leatherette	/L	1	
	BG2	black	77		
	CC5	gazelle	77		
	DD2	beige	78-		
	DD4	brown	78-		
	DD6	black	78-		
(2)	A 911 521 038 57	cover for cushion sewed version leatherette	/R	1	
	BG2	black	77		
	CC5	gazelle	77		
	DD2	beige	78-		
	DD4	brown	78-		
	DD6	black	78-		
(2)	A 911 521 037 60	cover for cushion leather	/L	1	
	1AJ	black			
	2NF	beige			
	3NG	brown			
(2)	A 911 521 038 60	cover for cushion leather	/R	1	
	1AJ	black			

Pos	Part Number	Name	Remarks	Qty	Model
	2NF	beige			
	3NG	brown			
3	A 911 521 072 59	backrest cover sewed version leatherette/ centre part large checker pattern		2	
	CC1	black/ black/yellow	76-77		
	CC2	black/ black/silver	76-77		
	CC4	gazelle/ saddle tan	76-77		
3	A 911 521 072 59	backrest cover sewed version leatherette/ centre part pin stripe velour		2	
	DA8	black/ black	77		
	DA9	gazelle/ cork	77		
	BQ2	brown/ cork	78		(CH)
	EM6	black/ black	79		(F)
	EQ4	brown/ cork	79		
3	A 911 521 072 59	backrest cover sewed version leatherette/ centre part FISCHGRAET		2	
	DC2	beige/ brown-beige	78-		
	DC5	brown/ brown-beige	78-		
	DC8	black/ orange	78-		
	DD1	black/ black-white	78-		
3	A 911 521 072 59	backrest cover sewed version leatherette/ centre part tartan cloth		2	
	EN3	black/ red-blue	/LL 79		TURBO
	EP1	black/ green-blue	/LL 79		TURBO
	EP2	brown/ brown-beige	/LL 79		TURBO
	EP3	beige/ brown-beige	/LL 79		TURBO
3	A 911 521 072 59	backrest cover sewed version		2	
3	A 911 521 072 59	backrest cover sewed version leatherette/ centre part flock cord		2	
	DB1	black/ red	77		
3A	A 911 521 072 69	backrest cover welded version leatherette		2	
	BG2	black	76-77		
	CC5	gazelle	76-77		
3A	A 911 521 072 57	backrest cover sewed version leatherette		2	
	BG2	black	77		
	CC5	gazelle	77		
	DD2	beige	78-		
	DD4	brown	78-		
	DD6	black	78-		
3A	A 911 521 072 60	backrest cover leather		2	
	1AJ	black			
	2NF	beige			

Pos	Part Number	Name	Remarks	Qty	Model	Pos	Part Number	Name	Remarks	Qty	Model
	3NG	brown									
		- -- E N D -- -									

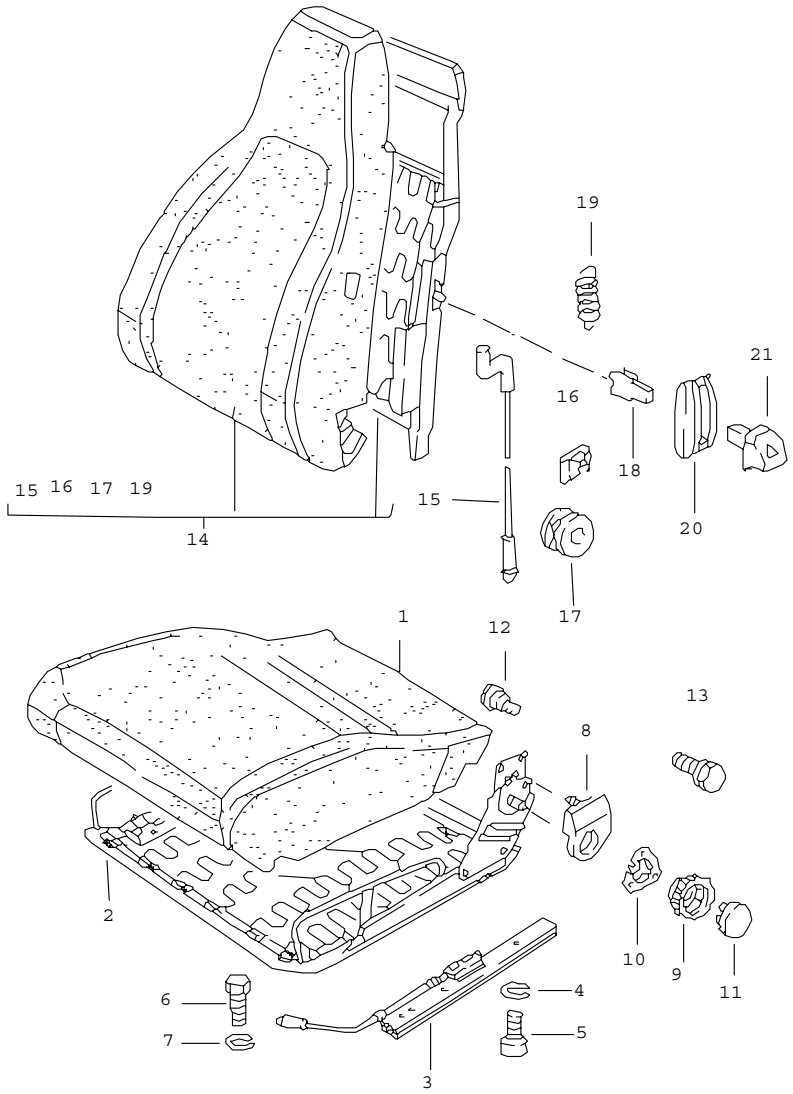

Pos	Part Number	Name	Remarks	Qty	Model
		front seat single parts			
1	911 521 385 01	foam part seat cushion	/L	1	
(1)	E 911 521 386 01	foam part seat cushion	/R	1	
2	911 521 069 56	seat frame	/L	1	
(2)	911 521 070 56	seat frame	/R	1	
3	A 477 881 211	seat rail with locking device	/L	1	
(3)	A 477 881 212	seat rail with locking device	/R	1	
(3)	A 944 521 491 00	seat rail		2	
(3)	944 521 491 00	seat rail inner see tpi GR.8 NR.34		2	
4	N 012 006 4	lock ring B 6		8	
5	900 067 009 02	pan-head screw M 6 X 15		8	
6	N 010 215 13	hexagon-head bolt M 6 X 15		8	
7	N 012 006 4	lock ring B 6		8	
8	911 521 359 02	cover	/L	1	
(8)	911 521 360 02	cover	/R	1	
9	E 911 521 381 00	shifting wheel for backrest adjustment		2	
10	911 521 571 00	tensioning spring		2	
11	911 521 383 00	cover rotary knob		2	
12	911 521 371 00	screw inner		2	
13	911 521 547 00	hexagon-head bolt M 10 X 20		4	

Pos	Part Number	Name	Remarks	Qty	Model
14	A 477 881 047	backrest without backrest cover	/L	1	
(14)	A 477 881 048	backrest without backrest cover	/R	1	
15	911 521 361 00	cable release backrest		2	
16	911 521 369 00	terminal for cable		2	
17	911 521 343 00	guide bush		2	
18	311 881 247	clamp		2	
19	311 881 287 A	spring		2	
20	311 881 607 A	rose		2	
21	113 881 633 E	knob		2	
	01C	black			
		- -- E N D -- -			

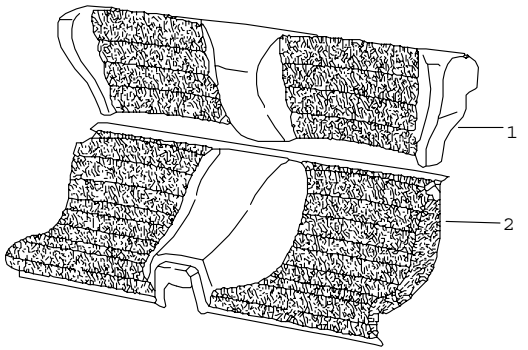

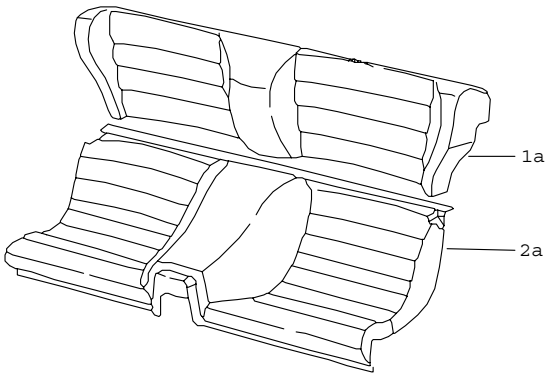

Pos	Part Number	Name	Remarks	Qty	Model
		back seat complete			
		single parts see group 8/08/20			
1	A 477 885 037 D	backrest leatherette/ centre part pin stripe velour		1	
	BQ2	brown/ cork carpet brown	78		(CH)
	EM6	black/ black/ carpet black	79		(F)
	EQ4	brown/ cork carpet cork	79		
1	A 477 885 037 D	backrest leatherette/ centre part FISCHGRAET		1	
	DC3	beige/ brown-beige carpet beige	78-		
	DC6	brown/ brown-beige carpet brown	78-		
	DC8	black/ orange carpet black	78-		
	DD1	black/ black-white carpet black	78-		
1	A 477 885 037 D	backrest leatherette/ centre part tartan cloth		1	

Pos	Part Number	Name	Remarks	Qty	Model
	EN3	black/ red-blue carpet black	/LL 79		TURBO
	EP1	black/ green-blue carpet black	/LL 79		TURBO
	EP2	brown/ brown-beige carpet brown	/LL 79		TURBO
	EP3	beige/ brown-beige carpet beige	/LL 79		TURBO
1	A 477 885 037 D	backrest		1	
1	A 477 885 037 D	backrest leatherette/ centre part flock cord		1	
	DB1	black/ red carpet red	77		
(1)	A 477 885 037 E	backrest leatherette/ centre part FISCHGRAET		1	(AUS)
	DC3	beige/ brown-beige carpet beige	78-		
	DC6	brown/ brown-beige carpet brown	78-		
	DC8	black/ orange carpet black	78-		
	DD1	black/ black-white carpet black	78-		
(1)	A 477 885 037 E	backrest leatherette/ centre part flock cord		1	(AUS)
	DB1	black/ red carpet red	77		
1A	A 477 885 037 A	backrest welded version leatherette		1	
	92U	gazelle/ carpet brown	76-77		
1A	A 477 885 037 B	backrest sewed version leatherette		1	
	92U	gazelle/ carpet brown	76-77		
1A	A 477 885 037 D	backrest leatherette		1	
	041	black/ carpet black	76-77		
	DD2	beige/ carpet beige	78-		
	DD4	brown carpet brown	78-		
	DD6	black carpet black	78-		
1A	A 477 885 037 E	backrest leatherette		1	(AUS)
	041	black/ carpet black	77		
	92U	gazelle/ carpet brown	77		

Pos	Part Number	Name	Remarks	Qty	Model
	DD2	beige/ carpet beige	78-		
	DD4	brown carpet brown	78-		
	DD6	black/ carpet black	78-		
2	A 477 885 871 A	seat cushion F >>92481 00776 leatherette/ centre part FISCHGRAET		1	924
	DC2	beige/ brown-beige	78-		
	DC5	brown/ brown-beige	78-		
	DD1	black/ black-white	78-		
2	A 477 885 871 A	seat cushion F >>92481 00776 leatherette/ centre part flock cord		1	924
	DB1	black/ red	77		
2	477 885 871 B	seat cushion F 92481 00777>> leatherette/ centre part pin stripe velour		1	
	BQ2	brown/ cork	78		(CH)
	EM6	black/ black	79		(F)
	EQ4	brown/ cork	79		
2	477 885 871 B	seat cushion F 92481 00777>> leatherette/ centre part FISCHGRAET		1	
	DC2	beige/ brown-beige	78-		
	DC5	brown/ brown-beige	78-		
	DC8	black/ orange	78-		
	DD1	black/ black-white	78-		
2	477 885 871 B	seat cushion F 92481 00777>> leatherette/ centre part tartan cloth		1	
	EN3	black/ red-blue	/LL 79		TURBO
	EP1	black/ green-blue	/LL 79		TURBO
	EP2	brown/ brown-beige	/LL 79		TURBO
	EP3	beige/ brown-beige	/LL 79		TURBO
2	477 885 871 B	seat cushion F 92481 00777>>		1	
2A	A 477 885 871 A	seat cushion F >>92481 00776 leatherette		1	924
	041	black	76-77		
	92U	gazelle	76-77		
	DD2	beige	78-		
	DD4	brown	78-		
	DD6	black	78-		
2A	477 885 871 B	seat cushion F 92481 00777>> leatherette		1	
	DD2	beige	78-		
	DD4	brown	78-		
	DD6	black	78-		
		- -- E N D -- -			

Model	Year	MG	SG	Illustration	Restrictions	Update	11:12	06.04.2005	PORSCHE PET PORSCHE
924	79	8	08	808-10		187			

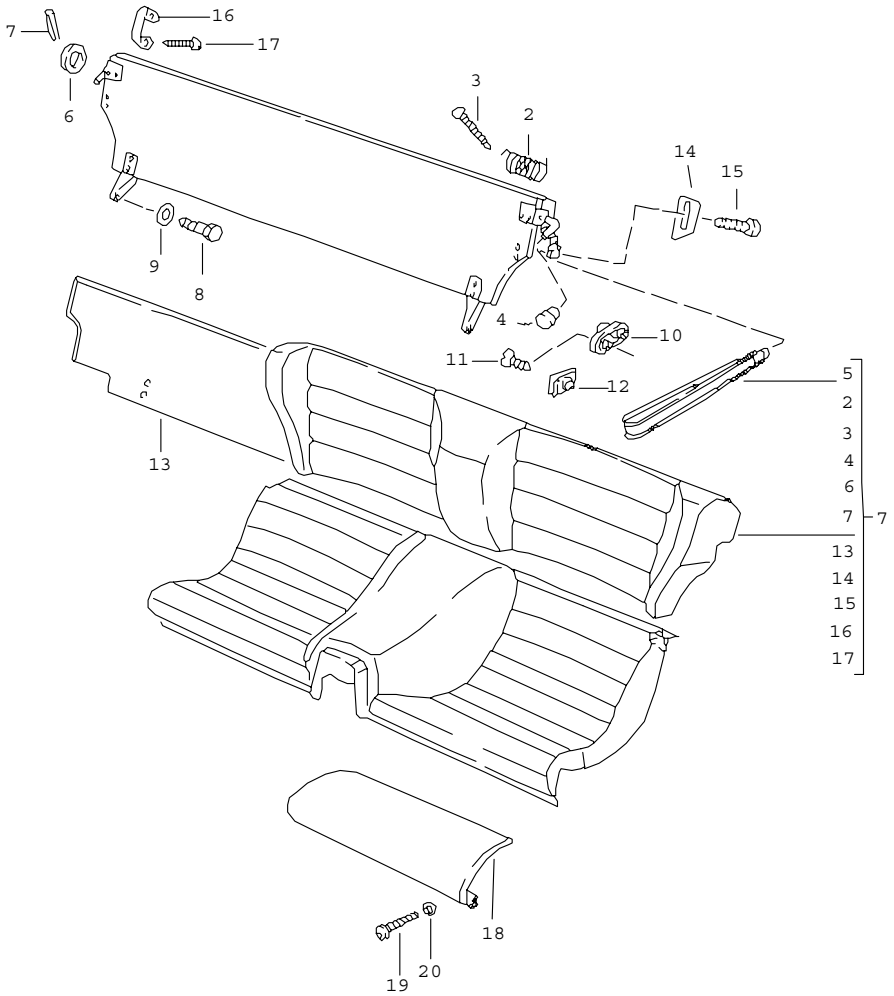

Pos	Part Number	Name	Remarks	Qty	Model
		back seat single parts			
1	-	backrest see group 8/08/05		1	
2	111 885 657	spring		1	
3	113 881 899	special tack		1	
4	477 885 699 B	plug	/L	1	
(4)	477 885 699 C	plug	/R	1	
5	477 885 667	loop	/L	1	
	05T	black			
	21S	brown			
6	E 477 885 555	cover		1	
7	900 197 010 00	roll pin 3 X 22		1	
8	477 885 767	hexagon-head bolt		2	
9	900 025 007 02	washer A 8,4		2	
10	111 867 329 A	locking lug	/L	1	
(10)	E 111 867 330 A	locking lug	/R	1	
11	E N 014 002 1	counters. head tapp. screw B 6,3 X 22		4	
12	999 591 327 02	speed nut B 6,3		4	
13	477 885 831 A	cover		1	
	07W	black	76-77		
	92V	dark brown	76-77		
	24U	red	77		
	43S	black	78-		
	83S	beige	78-		
	87S	brown	78-		
	2NT	cork	79		
14	477 885 865	stop	/L	1	

Pos	Part Number	Name	Remarks	Qty	Model
(14)	477 885 866	stop	/R	1	
15	N 014 155 1	oval-head screw M 5 X 22		4	
16	477 885 761	holder		2	
17	N 014 096 3	tapping screw B 4,2 X 22		4	
18	477 885 041 B	back seat extension leatherette	/L	1	(J)
	43S	black			
	83S	beige			
	87S	brown			
(18)	477 885 042 B	back seat extension F 92483 30001>> leatherette	/R	1	(J)
	43S	black			
	83S	beige			
	87S	brown			
19	N 043 940 3	tapping screw 4,2 X 25		6	(J)
20	900 151 028 02	washer 4,3		6	(J)
		- -- E N D -- -			

Pos	Part Number	Name	Remarks	Qty	Model

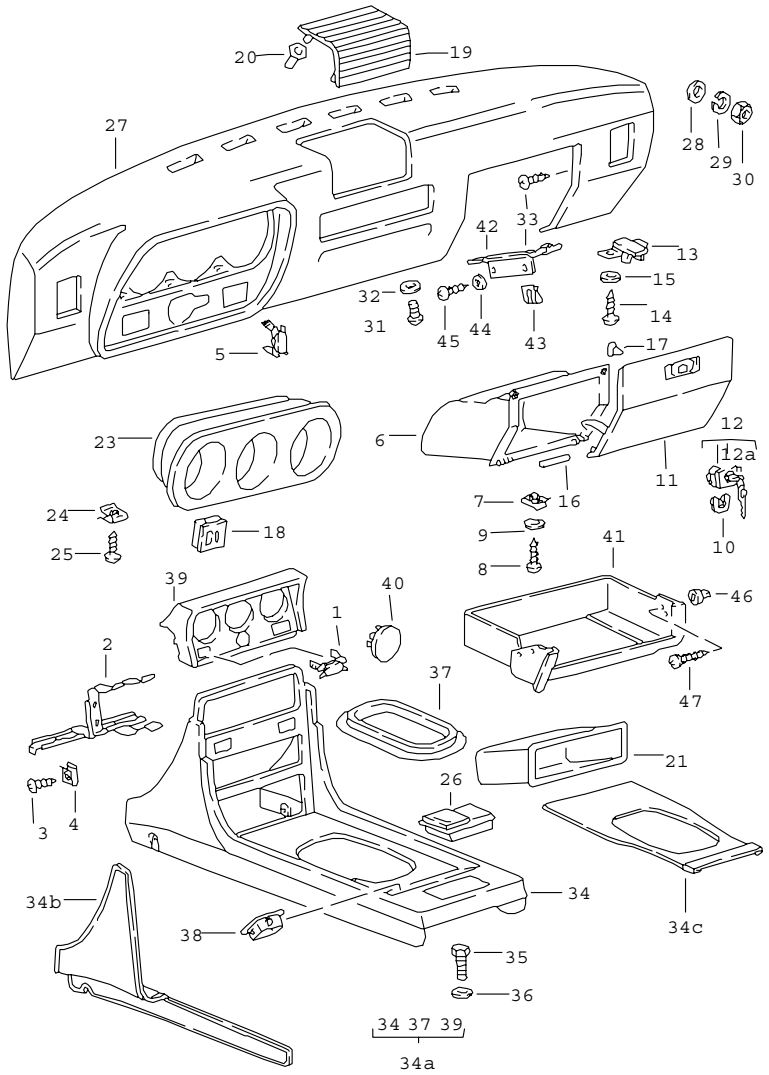

Pos	Part Number	Name	Remarks	Qty	Model
		dashboard			
1	133 957 087	cover		1	
2	477 857 067 A	support centre console		1	
3	N 013 957 5	tapping screw BZ 3,5 X 9,5		2	
4	N 015 438 1	speed nut B 4,2 X 17		2	
5	133 957 087	cover		1	(I)
6	477 857 095	glove compartment F >>92481 00829 F >>92482 01329 F >>92483 30100		1	924
(6)	477 857 095 A	glove compartment F 92481 00830>> F 92482 01330>> F 92483 30101>>		1	
7	N 015 422 2	speed nut B 4,2 X 17		2	
8	N 013 964 4	tapping screw B 4,2 X 16		5	
9	900 151 028 02	washer B 5		5	
10	133 857 119	clamp		1	
	01C	black			
11	477 857 123	glove box cover	/LL	1	
	06W	anthracite	76-77		
	041	black	77		
	91V	saddle tan	76-77		
	05T	black	78-		
	21S	brown	78-		
(11)	478 857 123	glove box cover	/RL	1	
	041	black	77		
	91V	saddle tan	77		
	05T	black	78-		

Pos	Part Number	Name	Remarks	Qty	Model
	21S	brown	78-		
-	E 477 853 149	badge	77	1	
-	999 591 211 01	speed nut	77	2	
12	477 857 133 A	lock with keys		1	
	01C	black			
12A	477 857 135 A	blank key blank key S 73 PROFIL SC		2	
12A	477 857 136 A	key with stipulated lock-no. state lock number		1	
13	477 857 143	lock piece		1	
	01C	black			
14	E 900 143 070 02	oval-head sheetmetal screw B 4,2 X 13		2	
15	900 025 002 02	washer A 4,3		2	
16	N 013 209 2	straight pin 4 H 8 X 36		2	
17	N 020 022 3	plug A 8 X 1		2	
18	477 857 137	cover light switch	/L	1	
	06W	anthracite	76-77		
	90V	saddle tan	76-77		
	01C	black	77-		
	89S	brown	78-		
(18)	477 857 138	cover switch rear window heating	/R	1	
	06W	anthracite	76-77		
	90V	saddle tan	76-77		
	01C	black	77-		
	89S	brown	78-		
19	477 857 187	cover loudspeaker		1	
	06W	anthracite	76-77		
	90V	saddle tan	76-77		
	01C	black	77-		
	89S	brown	78-		
20	477 857 821	grommet loudspeaker grille		4	
21	481 857 233 A	package box		1	
23	477 857 283 A	covering for instruments		1	
24	999 591 722 02	speed nut B 4,8 X 19,8		2	
25	900 143 046 02	tapping screw B 4,8 X 16		2	
26	477 857 305	ashtray		1	
	01C	black			
27	477 857 881	dashboard F >>92481 00829 F >>92482 01329 F >>92483 30100	/LL	1	924
	06W	anthracite	76-77		
	91V	saddle tan	76-77		
	041	black	76-77		
	05T	black	78-		
	21S	brown	78-		
27	477 857 881 A	dashboard F 92481 00830>>	/LL	1	
	05T	black			
	21S	brown			
(27)	477 898 881	dashboard	/LL	1	924
	06W	anthracite	76-77		
	05T	black			
	91V	saddle tan			

Pos	Part Number	Name	Remarks	Qty	Model
(27)	478 857 881	dashboard F >>92481 00829	/RL	1	
	91V	saddle tan	76-77		
	041	black	76-77		
	05T	black	78-		
	21S	brown	78-		
(27)	478 857 881 A	dashboard F 92481 00830>>	/RL	1	
	05T	black			
	21S	brown			
28	N 011 612 3	washer R 7		2	
29	N 012 036 1	lock ring B 6		2	
30	900 076 010 02	hexagon nut M 6		2	
31	N 014 140 5	oval-head screw AM 6 X 15		1	
32	N 011 524 7	washer A 6,4		1	
33	900 143 007 02	tapping screw B 4,2 X 19		4	
34	477 857 909	centre console		1	
	01C	black	77-		
	89S	cadbury brown	78-		
34A	477 898 951	centre console	76-77	1	
	06W	anthracite			
	90V	saddle tan			
34B	477 863 741	lining	/L	1	TURBO
	43S	black			
	83S	beige			
	87S	brown			
(34B)	477 863 742	lining	/R	1	TURBO
	43S	black			
	83S	beige			
	87S	brown			
34C	477 863 749	carpet		1	TURBO
	43S	black			
	83S	beige			
	87S	brown			
35	N 013 891 1	tapping screw M 8 X 15		2	
36	N 011 533 2	washer B 8,4		2	
37	477 857 975	support frame		1	
	06W	anthracite	76-77		
	90V	saddle tan	76-77		
	01C	black	77-		
	89S	brown	78-		
38	911 552 469 00	cover		X	
39	477 857 977	instrument insert		1	
	CB9	anthracite	76-77		
	CC3	saddle tan	76-77		
	01C	black	77-		
	89S	cadbury brown	78-		
40	841 863 267	cover		2	
	041	black			
41	477 857 836	shelf	/LL	1	
	01C	black			
	89S	brown			
(41)	477 857 836 A	shelf	/LL -78	1	924:M 573
	01C	black			
	89S	cadbury brown			

Pos	Part Number	Name	Remarks	Qty	Model	Pos	Part Number	Name	Remarks	Qty	Model
-	477 857 173	clip	/LL	1							
42	477 857 195 A	support	/LL	1							
43	N 015 422 2	speed nut B 4,2 X 17	/LL	2							
44	900 025 002 02	washer A 4,3	/LL	4							
45	N 013 964 4	tapping screw B 4,2 X 16	/LL	3							
(45)	N 013 971 3	tapping screw B 4,8 X 22	/LL	1							
		- -- E N D -- -									

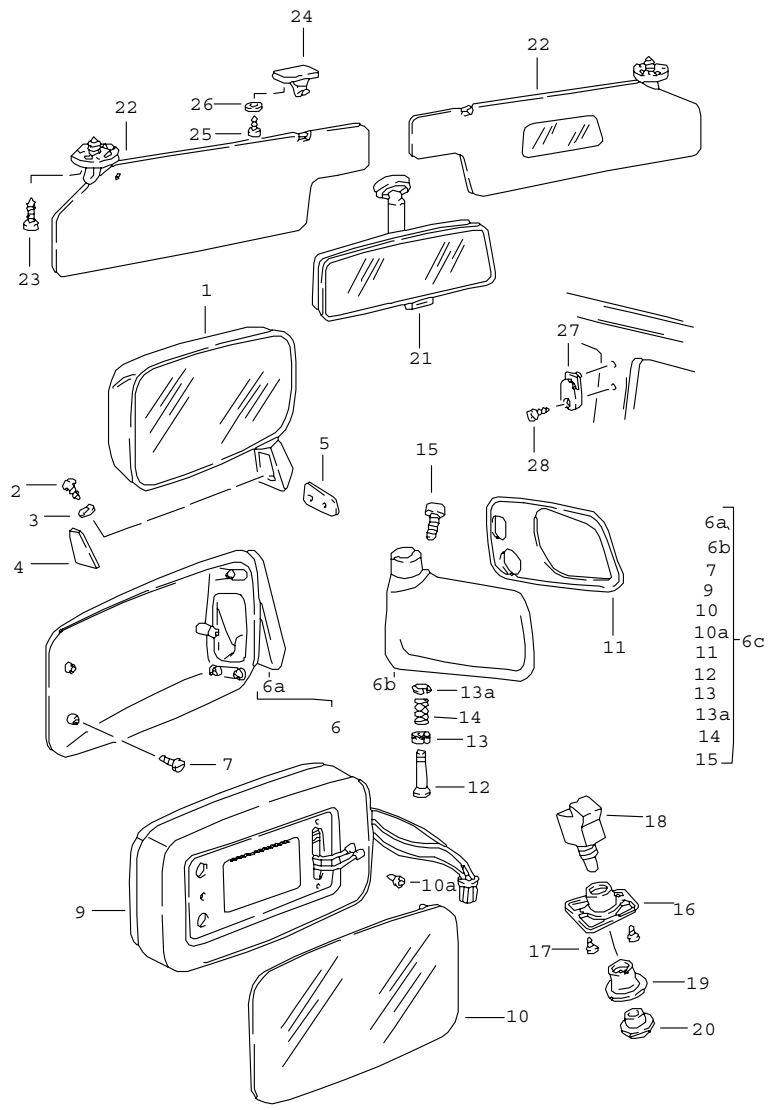

Pos	Part Number	Name	Remarks	Qty	Model
		door mirror interior mirror sun visor			
1	E 477 857 501 B	door mirror plan	/L	1	
(1)	477 857 502 B	door mirror plan	/R	1	
(1)	E 477 857 501 A	door mirror convex	/L	1	
(1)	E 477 857 502 A	door mirror convex	/R	1	
2	N 014 132 4	oval-head screw M 5 X 18		2	
3	N 012 225 2	spring washer B 5		2	
4	861 857 519	cover	/L	X	
(4)	E 861 857 519 A	cover with bearing bracket	/L	X	
(4)	862 857 520	cover	/R	X	
(4)	862 857 520 A	cover with bearing bracket	/R	X	
5	E 477 857 543	desk pad		1	
		door mirror electrically adjustable F 92481 02503>>			
6	928 731 023 04	mirror housing	/LL/L	1	
(6)	928 731 024 04	mirror housing	/LL/R	1	
(6)	927 731 023 04	mirror housing	/RL/R	1	
(6)	927 731 024 04	mirror housing	/RL/L	1	
6A	911 731 043 00	mirror housing	/L	1	
(6A)	911 731 044 00	mirror housing	/R	1	
6B	944 731 141 00	mirror base	/LL/L	1	
(6B)	944 731 142 00	mirror base	/LL/R	1	
(6B)	945 731 142 00	mirror base	/RL/R	1	
(6B)	945 731 141 00	mirror base	/RL/L	1	

Pos	Part Number	Name	Remarks	Qty	Model
6C	477 898 027	door mirror plan	/LL/L	1	
(6C)	477 898 028	door mirror plan	/LL/R	1	
(6C)	477 898 029	door mirror convex	/LL/L	1	
(6C)	477 898 030	door mirror convex	/LL/R	1	(S),(N)
(6C)	478 898 027	door mirror plan	/RL/L	1	
(6C)	478 898 028	door mirror plan	/RL/R	1	
(6C)	478 898 029	door mirror convex	/RL/L	1	
7	999 143 003 02	hexagon-head bolt M 5 X 10		3	
9	911 731 027 06	frame		1	
10	911 731 035 00	mirror glass plan		1	
(10)	911 731 035 01	mirror glass convex		1	
10A	999 703 128 40	grommet		3	
11	944 731 505 00	desk pad	/LL/L	1	
(11)	944 731 508 00	desk pad	/LL/R	1	
(11)	945 731 506 00	desk pad	/RL/R	1	
(11)	945 731 507 00	desk pad	/RL/L	1	
12	911 731 257 02	guide tube		1	
13	911 731 345 02	adjusting washer		1	
13A	911 731 347 00	adjusting washer		1	
14	911 731 029 01	compression spring		1	
15	900 186 042 02	pan-head screw M 5 X 40		1	
16	E 477 867 181	mounting piece		1	
17	N 014 090 5	tapping screw 3,9 X 13		2	
18	911 613 115 00	switch		1	
19	928 555 463 02	threaded bush		1	
20	928 613 462 00	knob		1	
		electric equipment door mirror		1	
-	477 971 111	harness door mirror driver's door		1	
-	477 971 115 A	harness door mirror dashboard	/LL	1	
-	E 478 971 115 A	harness door mirror dashboard	/RL	1	
-	477 971 910	bellows see group 8/04/00		1	
		electric equipment door mirror		2	
-	477 971 115	harness door mirror dashboard	/LL	1	
-	478 971 115	harness door mirror dashboard	/RL	1	
-	477 971 113	harness door mirror passenger's door		1	
-	477 955 703	rocker switch passenger's side	/LL	1	
-	478 955 703	mirror changeover switch passenger's side	/RL	1	
-	803 971 979	plug socket		X	
-	477 971 910	bellows see group 8/04/00		2	
-	477 898 025	installation set adjustable and heatable door mirror plan see group 8/98/00	/LL/L	1	

Pos	Part Number	Name	Remarks	Qty	Model
-	477 898 026	installation set adjustable and heatable door mirror plan see group 8/98/00	/LL/R	1	
21	477 857 511	interior mirror inner		1	
22	477 857 551	sun visor without mirror	/LL/L	1	
	90V	saddle tan	76-77		
	05T	black			
	21S	brown	78-		
(22)	478 857 551 A	sun visor with mirror	/RL/L	1	
	05T	black			
	21S	brown			
(22)	477 857 551 D	sun visor with mirror	/L	1	
	05T	black	79-		
	21S	brown	79-		
(22)	477 857 552	sun visor with mirror	/R	1	924
	041	black	76-77		
	90V	saddle tan	76-77		
(22)	477 857 552 C	sun visor with mirror	/R	1	
	05T	black	78-		
	21S	brown	78-		
(22)	477 857 552 A	sun visor without mirror	/R	1	
	041	black			
	90V	saddle tan	76-77		
	05T	black			
	21S	brown	78-		
(22)	477 857 552 B	sun visor without mirror	/R	1	(AUS)
	041	black	76-77		
	90V	saddle tan	76-77		
	05T	black	78-		
	21S	brown	78-		
23	N 014 096 3	tapping screw B 4,2 X 22		6	
24	803 857 561 A	support sun visor		2	
25	900 143 047 07	tapping screw B 4,2 X 19		4	
25	900 143 047 07	tapping screw B 4,2 X 19		4	(AUS)
26	900 151 028 02	washer B 4,3		4	
27	171 857 635	coat hook		2	
	01C	black			
28	171 857 650	screw 4,8 X 16		2	
		- -- E N D -- -			

Model	Year	MG	SG	Illustration	Restrictions	Update	11:13	06.04.2005	PORSCHE PET PORSCHE
924	79	8	09	809-10		187			

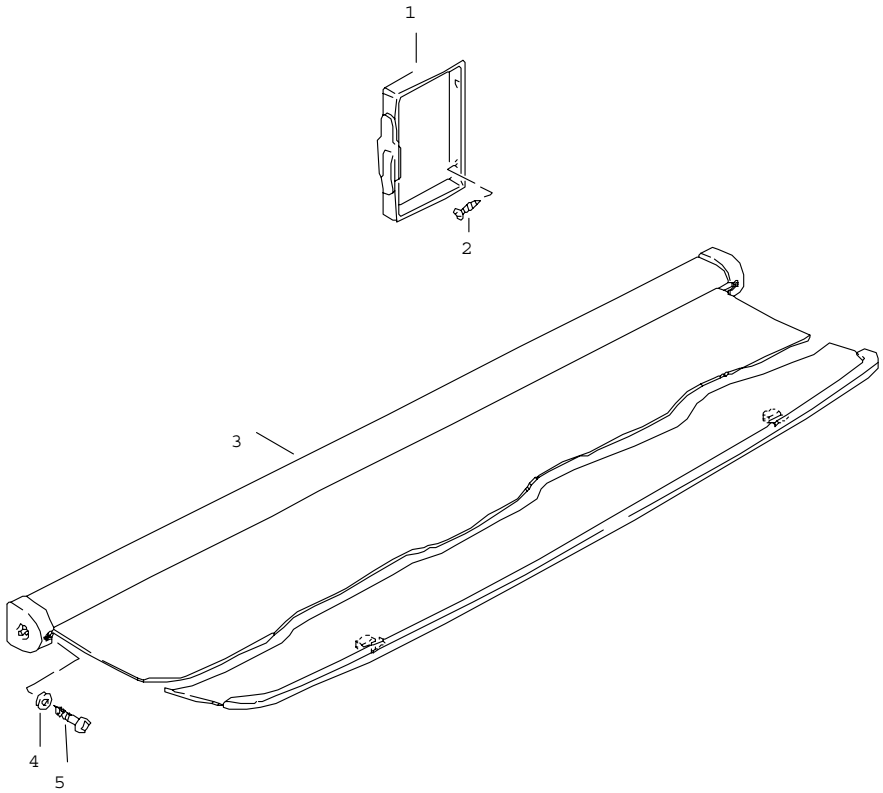

Pos	Part Number	Name	Remarks	Qty	Model
		luggage boot cover			
1	171 860 273	retaining strap first-aid kit		1	
-	171 860 269	retaining bracket first-aid kit		1	
2	900 145 035 02	counters. head tapp. screw 4,2 X 16		2	
3	477 863 511	luggage boot cover	76-77	1	
	041	black	76-77		
	90V	saddle tan	76-77		
(3)	477 863 511 A	luggage boot cover		1	
	05T	black			
	89S	brown	78-		
-	477 863 517 A	cover housing luggage boot cover 17,5 MM	/L	1	
	05T	black			
	89S	brown			
-	477 863 518 A	cover housing luggage boot cover 17,5 MM	/R	1	
	05T	black			
	89S	brown			
-	477 863 517 B	cover housing luggage boot cover 16 MM	/L	1	
	05T	black			
-	477 863 518 B	cover housing luggage boot cover 16 MM	/R	1	
	05T	black			
4	900 025 003 02	washer A 5,3		2	

Pos	Part Number	Name	Remarks	Qty	Model	Pos	Part Number	Name	Remarks	Qty	Model
5	N 013 971 3	tapping screw 4,8 X 22		2							
-	477 863 539	luggage net		1							
		- -- E N D -- -									

Model	Year	MG	SG	Illustration	Restrictions	Update	11:13	06.04.2005	PORSCHE PET PORSCHE
924	79	8	10	810-00		187			

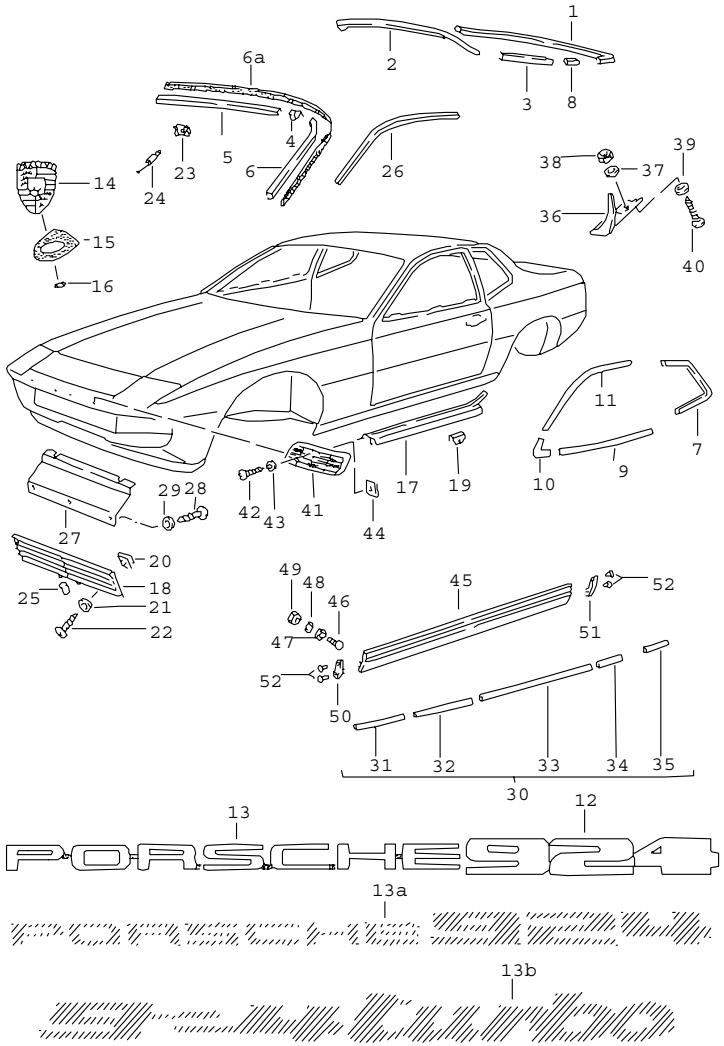

Pos	Part Number	Name	Remarks	Qty	Model
		trim frame insignias			
1	477 853 311	trim frame rear window		1	924
2	477 853 313	trim frame rear window		1	924
(2)	477 853 313 A	trim frame rear window		1	TURBO
3	477 853 315	trim frame	/L	1	924
(3)	477 853 316	trim frame rear window	/R	1	924
4	477 853 339	sleeve F >>92481 02261	/L	1	924
(4)	477 853 340	sleeve F >>92481 02261	/R	1	924
5 E	477 853 343	moulding F >>92481 02422		1	924
5	477 853 343 A	moulding F 92481 02423>>		1	
6	477 853 345	moulding F >>92481 02422	/L	1	924
6	477 853 019	moulding F 92481 02423>>	/L	1	
(6) E	477 853 346	moulding F >>92481 02422	/R	1	924
(6)	477 853 020	moulding F 92481 02423>>	/R	1	
7	477 853 365	trim frame chrome	/L	1	924
7	477 853 365 A	trim frame black	/L	1	TURBO
(7) E	477 853 366	trim frame chrome	/R	1	924
(7)	477 853 366 A	trim frame black	/R	1	TURBO
8	477 853 367	sleeve trim frame		4	924
9	477 853 371 A	moulding chrome	/L	1	924

Pos	Part Number	Name	Remarks	Qty	Model
9	477 853 371 B	moulding black	/L	1	TURBO
(9)	477 853 372 A	moulding chrome	/R	1	924
(9)	477 853 372 B	moulding black	/R	1	TURBO
10	E 477 853 375	moulding chrome		2	924
10	477 853 375 A	moulding black		2	TURBO
11	477 853 373 A	moulding door chrome	/L	1	924
11	477 853 373 B	moulding door black	/L	1	TURBO
(11)	E 477 853 374 A	moulding door chrome	/R	1	924
(11)	477 853 374 B	moulding door black	/R	1	TURBO
12	E 477 853 605	logo	-78	1	924
13	E 477 853 606	logo	-78	1	924
-	477 853 663	grommet	-78	6	924
13A	477 853 625	logo adhesive film black	/H 79-	1	924
(13A)	477 853 625 A	logo adhesive film white	/H 79-	1	924
13B	E 477 853 627	logo adhesive film black	/H	1	TURBO
13B	477 853 627 A	logo adhesive film white	/H	1	TURBO
(13B)	E 477 853 721	logo	/L	1	TURBO
(13B)	E 477 853 722	logo adhesive film	/R	1	TURBO

Pos	Part Number	Name	Remarks	Qty	Model
14	A 901 559 210 20	lid emblem		1	
14	993 559 211 00	lid emblem		1	
15	901 559 215 20	desk pad		1	
16	999 591 423 03	tapping nut		2	
17	477 853 657 A	scuff plate	/L	1	
(17)	477 853 658 A	scuff plate	/R	1	
18	944 559 135 00	radiator grille		1	
19	477 853 655	clamp		10	
20	N 015 438 1	speed nut B 3,5 X 16,5		2	
21	900 151 028 02	washer B 4,3		2	
22	N 013 959 3	tapping screw B 3,5 X 16		2	
23	928 559 285 02	clamp F >>92481 02261		16	924
23	477 853 659 B	clamp F 92481 02262>>		16	924
24	431 805 121 A	bolt		16	
25	477 853 661	grommet		2	
26	477 853 705	roof moulding	/L	1	
(26)	477 853 706	roof moulding	/R	1	
27	E 477 853 715	cooling air duct	-78	2	924
(27)	477 853 717	cooling air duct	-78	1	924:M 573
28	900 143 007 02	tapping screw B 4,2 X 13	-78	3	924
29	900 151 028 02	washer B 4,3	-78	3	924
30	477 853 995	set of moldings moulding comprising:		1	
31	477 853 981	moulding	/L	1	
(31)	477 853 982	moulding body front section 285 MM	/R	1	

Pos	Part Number	Name	Remarks	Qty	Model
32	477 853 983	moulding	/L	1	
(32)	477 853 984	moulding body front section 395 MM	/R	1	
33	477 853 985	moulding	/L	1	
(33)	477 853 986	moulding door 1123 MM	/R	1	
34	477 853 987	moulding	/H/L	1	
(34)	477 853 988	moulding 285 MM	/H/R	1	
35	477 853 989	moulding	/H/L	1	
(35)	477 853 990	moulding 438 MM	/H/R	1	
36	477 853 383	wheel cover	/L	1	
(36)	477 853 384	wheel cover not for	/R	1	(S)
37	N 011 692 3	washer 5,1		8	
38	N 021 196 1	lock nut M 5		8	
-	211 853 611	sealing washer		6	
-	N 012 068 1	clamping washer A 4		2	
39	900 025 002 02	washer		2	
40	N 013 964 4	tapping screw B 4,2 X 16		2	
41	E 477 853 381	ventilation grille		4	TURBO
42	N 013 953 9	tapping screw		4	TURBO
43	900 025 001 02	washer		4	TURBO
44	N 015 428 1	speed nut		4	TURBO
45	477 853 727 A	sill cover	/L	1	TURBO
(45)	477 853 728 A	sill cover	/R	1	TURBO
46	477 809 683	screw		4	TURBO
47	N 011 525 13	washer A 8,4		4	TURBO
48	N 012 038 1	lock ring 8		4	TURBO
49	900 076 025 02	hexagon nut M 8		4	TURBO
50	477 853 735 A	cap	/V/L /H/R	2	TURBO
51	E 477 853 736 A	cap	/V/R /H/L	2	TURBO
52	N 900 921 01	blind rivet 5 X 8		8	TURBO
-	E 477 853 665	logo	/L	1	
-	477 853 666	logo "S"	/R	1	
		cover light	/V		
-	E 477 853 665 A	logo	/L	1	
-	477 853 666 A	logo "S"	/R	1	
		cover dark	/V		
		decorative film stripe special model white			
-	477 853 609	adhesive film	/L	1	924
-	E 477 853 610	adhesive film MARTINI 1 set	/R	1	924
		special model dolomite grey metallic stripe black/silver			(F)
-	E 477 853 617	decorative film	/L/V	1	924
-	E 477 853 618	decorative film	/R/V	1	924
-	E 477 853 619	decorative film	/L	1	924
-	E 477 853 620	decorative film centre	/R	1	924

Pos	Part Number	Name	Remarks	Qty	Model
-	E 477 853 621	decorative film	/L/H	1	924
-	E 477 853 622	decorative film	/R/H	1	924
-	E 477 853 623	decorative film	/H	1	924
		special model pearl metallic stripe cork/brown			
-	477 853 617 A	lateral stripes	/L/V	1	924
-	477 853 618 A	decorative film	/R/V	1	924
-	E 477 853 619 A	decorative film	/L	1	924
-	477 853 620 A	decorative film centre	/R	1	924
-	E 477 853 621 A	decorative film	/L/H	1	924
-	477 853 622 A	decorative film	/R/H	1	924
-	E 477 853 623 A	decorative film	/H	1	924
-	E 911 559 319 06	logo porsche lateral black hatched		2	
-	911 559 319 07	logo porsche lateral white hatched		2	
		- -- E N D -- -			

Model	Year	MG	SG	Illustration	Restrictions	Update				
924	79	8	11	811-00		187	11:14	06.04.2005	PORSCHE	PET	PORSCHE

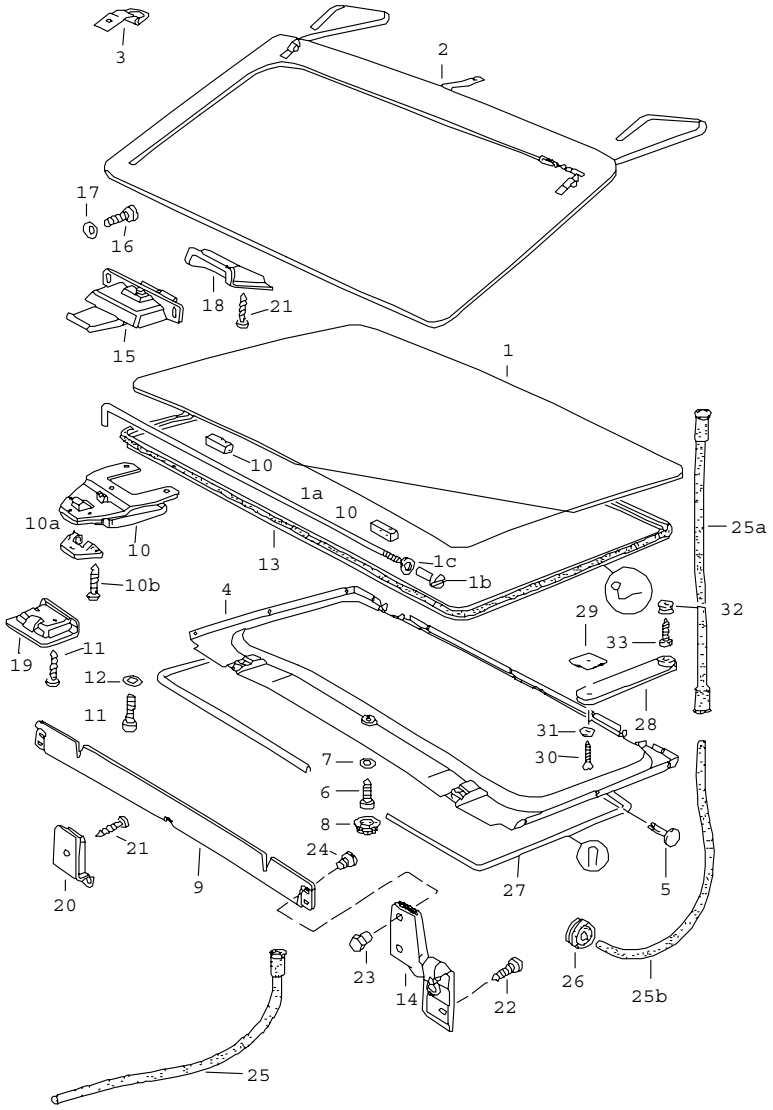

Pos	Part Number	Name	Remarks	Qty	Model
		lifting roof			M 650
1	477 871 021	roof		1	
1A	477 871 761	tensioning device		1	
1B	477 871 763 A	threaded sleeve		1	
1C	N 012 226 5	spring washer B 6		1	
1D	477 871 789	sealing strip		2	
2	477 871 027	pocket		1	
	05T	black	76-		
	92V	dark brown	76-77		
	21S	brown	78-		
3	477 871 029	support pocket		1	
	041	black	76-		
	90V	dark brown	76-		
4	477 871 047	lining		1	
	041	black			
	90V	brown	76-77		
	05T	black	78-		
	21S	brown	78-		
5	477 871 053	clip		11	
6	311 867 167	tapping screw 4,2		1	
7	900 151 028 02	washer 4,3		1	
8	311 867 169	cap		1	
	01C	black	76-		
	90V	brown	76-		
9	944 564 993 00	air deflector		1	
10	477 871 217	roof catch	/V	2	
10A	477 871 219	bearing bracket		2	

Pos	Part Number	Name	Remarks	Qty	Model
	01C	black			
10B	N 033 174 1	countersunk-head screw 3 X 6		6	
11	N 033 018 1	lens-head screw M 5 X 12		2	
12	999 704 605 07	cone washer		2	
13	944 564 114 01	gasket		1	
14	477 871 635 A	hinge	/L	1	
(14)	477 871 636 A	hinge	/R	1	
15	477 871 649	roof catch	/H	2	
16	900 146 003 02	oval-head screw AM 5 X 11		8	
17	N 012 225 2	spring washer B 5		4	
18	477 871 651 A	locking bracket		2	
19	477 871 665 A	centring wedge	/V	2	
20	477 871 683 A	bearing		1	
21	N 013 964 4	tapping screw B 4,2 X 16		9	
22	900 143 031 02	oval-head sheetmetal screw		4	
23	477 871 701 A	cap nut		4	
24	477 837 959	self-lock. fillister screw		4	
25	321 877 233 C	water drain hose	/V	2	
26	021 119 569	rubber sleeve		4	
27	944 564 621 00	protective edging		1	
28	477 871 501	securing strap		1	
	43S	black			
	87S	brown			
29	477 871 505	reinforcement plate		1	
30	N 014 091 4	tapping screw B 3,9 X 16		1	
31	N 011 590 1	cone washer		1	
32	477 871 509	ball knob		1	
33	900 143 003 00	tapping screw B 3,5 X 16 POS. 28-33 see workshop manual		1	
34	E 477 871 159	lever		2	
35	E N 013 327 1	roll pin 3 X 18		2	

- -- E N D -- -

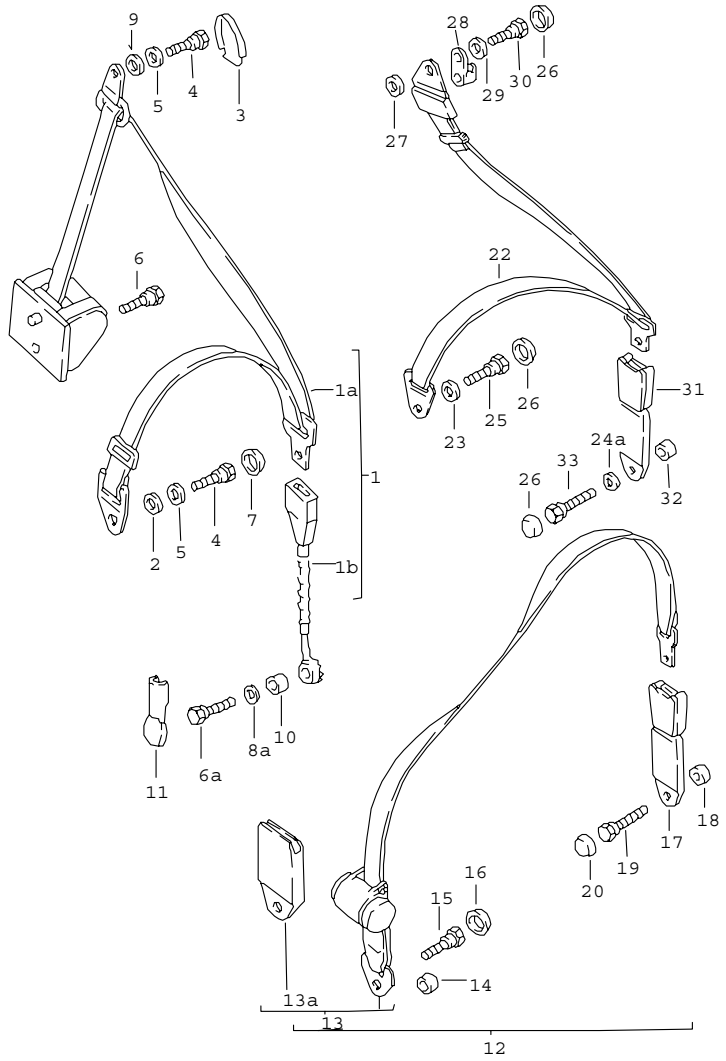

Pos	Part Number	Name	Remarks	Qty	Model
		seat belt			
1A	E 477 857 705	seat belt	/L	1	
1B	477 857 755 F	seat belt buckle	/L	1	
(1)	477 857 691 B	seat belt automatic F >>92491 01390	/L	1	(GB)
(1A)	E 477 857 705 B	seat belt	/L	1	(GB)
(1B)	E 477 857 755 H	seat belt buckle F 92491 01391>>	/L	1	(GB)
(1)	477 857 691 C	seat belt automatic F >>92491 03190	/L	1	(AUS)
(1A)	E 477 857 705 C	seat belt	/L	1	(AUS)
(1B)	E 477 857 755 K	seat belt buckle F 92491 03191>>	/L	1	(AUS)
(1)	477 857 691 D	seat belt automatic F >>92481 08299	/L	1	(S)
(1A)	E 477 857 705 D	seat belt	/L	1	(S)
(1B)	477 857 755 F	seat belt buckle F 92481 08300>>	/L	1	(S)
(1A)	477 857 706	seat belt	/R	1	
(1B)	477 857 756 F	seat belt buckle	/R	1	
(1)	477 857 692 B	seat belt automatic F >>92491 01390	/R	1	(GB)
(1A)	477 857 706 B	seat belt	/R	1	(GB)
(1B)	E 477 857 756 H	seat belt buckle F 92491 01391>>	/R	1	(GB)
(1)	477 857 692 C	seat belt automatic F >>92491 01390	/R	1	(AUS)
(1A)	E 477 857 706 C	seat belt	/R	1	(AUS)
(1B)	E 477 857 756 K	seat belt buckle F 92491 01391>>	/R	1	(AUS)
(1)	477 857 692 D	seat belt automatic F >>92481 08299	/R	1	(S)

Pos	Part Number	Name	Remarks	Qty	Model
(1A)	E 477 857 706 D	seat belt	/R	1	(S)
(1B)	477 857 756 F	seat belt buckle F 92481 08300>>	/R	1	(S)
2	111 857 707 A	spacer		2	
3	911 803 233 01	cap		2	
4	111 857 793 E	fastening screw		4	
5	211 857 771	washer		8	
6	111 857 799	screw		2	
6A	111 857 799	screw for seat belt buckle fixed		2	
(6A)	111 857 793 E	fastening screw for seat belt buckle movable		2	
7	811 857 845	cap		2	
8A	211 857 771	washer for seat belt buckle movable		4	
9	N 011 655 2	washer 11,5		2	
10	E 810 019 829	guide sleeve		2	
11	477 857 779	cap		2	
12	477 857 693 A	set		1	924
13	477 857 787 A	seat belt		02	
13A	477 857 750 B	cap		2	
14	901 803 116 40	spacer sleeve		2	
15	111 857 793 E	fastening screw		2	
16	811 857 845	cap		2	
17	477 857 739 A	seat-belt buckle		2	
18	928 803 259 02	spacer sleeve		2	
19	477 857 853	screw		2	
20	811 857 845	cap		2	

Pos	Part Number	Name	Remarks	Qty	Model
12	E 477 857 693 C	set lap belt automatic comprising:	/H	1	TURBO
13	477 857 787 A	seat belt		2	
13A	477 857 750 B	cap		2	
14	928 803 259 02	spacer sleeve		2	
15	803 019 811 B	screw		2	
16	811 857 845	cap		2	
17	477 857 739 A	seat-belt buckle		2	
18	928 803 259 02	spacer sleeve		2	
19	477 857 853	screw		2	
20	811 857 845	cap		2	
		three-point seat belt without automatic	/H		(AU)
22	E 478 857 811 A	seat belt		2	
23	477 857 823	reducing ring		2	
24A	211 857 771	washer		2	
25	111 857 799 A	fastening screw		2	
26	811 857 845	cap		6	
27	211 857 771	washer		2	
28	477 857 825 A	suspension		2	
29	E 810 019 829	guide sleeve		2	
30	111 857 793 E	fastening screw		2	
31	478 857 739	seat-belt buckle fixed		2	
(31)	E 478 857 739 A	seat-belt buckle movable		2	
32	928 803 259 02	spacer sleeve for seat-belt buckle fixed		2	

Pos	Part Number	Name	Remarks	Qty	Model	Pos	Part Number	Name	Remarks	Qty	Model
(32)	928 803 259 02	spacer sleeve for seat-belt buckle movable		2							
33	E 477 857 841	screw for seat-belt buckle fixed		2							
(33)	477 857 853	screw for seat-belt buckle movable		2							
		- -- E N D -- -									

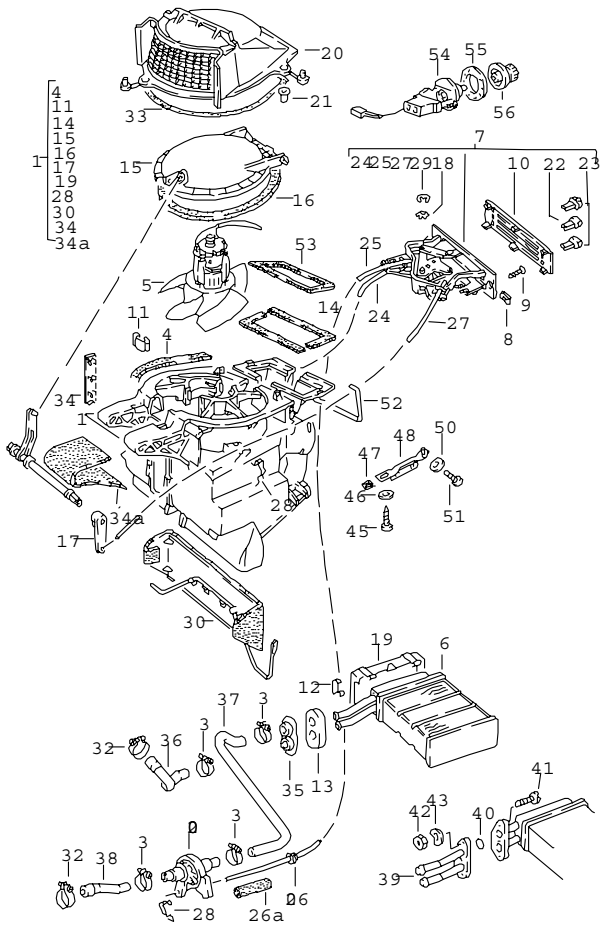

0

Pos	Part Number	Name	Remarks	Qty	Model
		heating ventilation heat exchanger			
1	E 477 819 014	flap control box		1	
2	477 819 017	heater valve		1	
3	999 512 346 00	hose clamp LC 16-25		5	
4	321 819 019	gasket		2	
5	321 819 021	blower motor		1	
6	477 819 030	heat exchanger		1	
7	477 819 021	control switch		1	
-	999 920 006 07	clamp		2	
-	477 819 057	support		1	
8	477 819 789	speed nut 16 X 12,2		2	
9	E N 014 100 1	tapping screw B 4,8 X 25		2	
10	477 819 043 B	cover F >>92481 01765		1	924
10	477 819 043 B	cover F 92481 01766>>		1	
11	321 819 053	clamp		2	
12	321 819 059	clamp		7	
13	477 819 065	damping piece		1	
14	321 819 089	gasket		2	
15	321 819 107	flap		1	
16	321 819 109	gasket		1	
17	321 819 123	lever for flap		1	
18	477 819 139	cup spring		2	
19	477 819 347	cover		1	
20	477 819 245	cover		1	
21	477 819 253	grommet		3	

Pos	Part Number	Name	Remarks	Qty	Model
22	477 819 319	knob centre		1	
23	477 819 319 A	knob		2	
24	477 819 279	traction footwell flap		1	
25	477 819 341	traction valve		1	
26	477 819 849	grommet		1	
27	477 819 325	traction for flap		1	
28	477 819 343	spring clamp		3	
28	900 116 003 02	circlip 4		2	
30	E 321 819 361	flap		1	
32	999 512 272 02	hose clamp LA 25X40		1	
33	000 043 172 00	sealing cord		*	
34	321 819 645	clip		1	
34A	477 819 345	sealing strip		1	
35	823 819 699 A	drain bush heater pipeline		1	
36	477 819 723	hose		1	
37	477 819 725	hose		1	
38	N 020 269 1	water hose		*	924
(38)	931 106 271 01	water hose		1	TURBO
39	477 819 869	connecting flange for heat exchanger		1	
40	021 101 173	sealing ring		2	
41	N 010 296 2	hexagon-head bolt M 5 X 18		3	
42	N 011 005 14	hexagon nut M 5		3	
43	N 012 225 2	spring washer A 5		3	
45	N 013 968 7	tapping screw B 4,8 X 16		2	
46	N 012 104 2	serrated lock washer A 5,3		2	
47	999 591 722 02	speed nut B 4,8 X 19		2	
48	477 857 195	bracket		1	
50	N 011 524 7	washer A 6,4		1	
51	N 014 140 5	oval-head screw AM 6 X 15		1	
52	477 857 809	clamp		1	
53	477 857 887	gasket F >>92481 00829		1	924
(53)	477 857 887 A	gasket F 92481 00830>>		1	
54	478 959 519	switch	/RL	1	M 573
55	477 959 517	rose	/RL	1	M 573
56	477 959 513	knob	/RL	1	M 573
		- -- E N D -- -			

Model	Year	MG	SG	Illustration	Restrictions	Update	11:15	06.04.2005	PORSCHE PET PORSCHE
924	79	8	13	813-05		187			

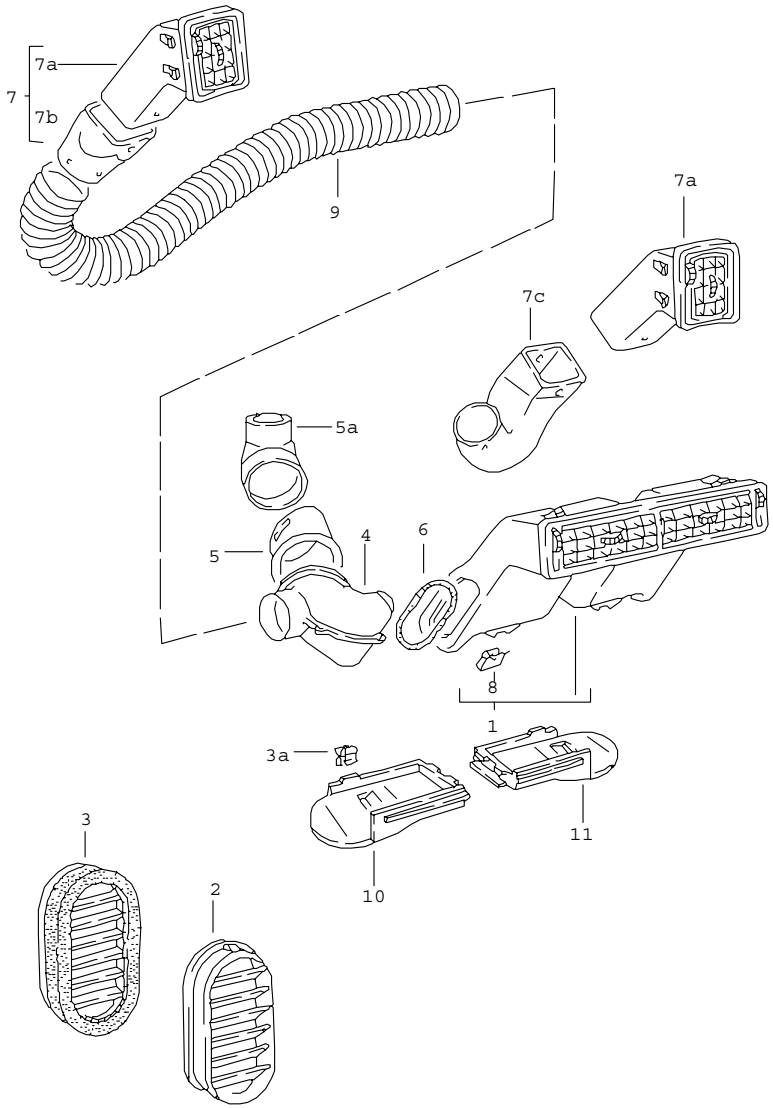

Pos	Part Number	Name	Remarks	Qty	Model
		air vent cover air hose			
1	477 819 151	air vent		1	
	01C	black			
2	477 819 175	cover lock pillar		2	
3	477 819 179 A	cover door	/L	1	
(3)	477 819 180	cover door	/R	1	
3A	477 819 212	clamp		2	
4	477 819 219 A	air distributor		2	
(5)	E 477 819 221	connecting piece	-78	1	924 M 573
5	477 819 223	connecting piece	/L	1	
(5)	477 819 224	connecting piece	/R	1	
5A	477 819 769	adapter		2	
6	477 819 229 A	gasket F >>92481 00829		2	
6	477 819 229 A	gasket		2	
(7)	477 819 232	side vent	/R -78	1	924
7A	477 819 291	side vent	/L	1	
	01C	black			
(7A)	477 819 292	side vent	/R 79-	1	
	01C	black			
7B	477 819 717	connecting piece	/R -78	1	924
7B	477 819 717	connecting piece	/L	1	
7C	477 820 409	connecting piece	/R 78-	1	
8	E 477 819 263	clamp		2	
9	477 819 395	hose 800 MM		2	
10	477 819 705	air duct	/L	1	
11	E 477 819 706	air duct	/R	1	

Model	Year	MG	SG	Illustration	Restrictions	Update			
924	79	8	13	813-05		187	11:15	06.04.2005	PORSCHE PET PORSCHE

Pos	Part Number	Name	Remarks	Qty	Model	Pos	Part Number	Name	Remarks	Qty	Model
		- -- E N D -- -									

Model	Year	MG	SG	Illustration	Restrictions	Update	11:15	06.04.2005	PORSCHE PET PORSCHE
924	79	8	13	813-10		187			

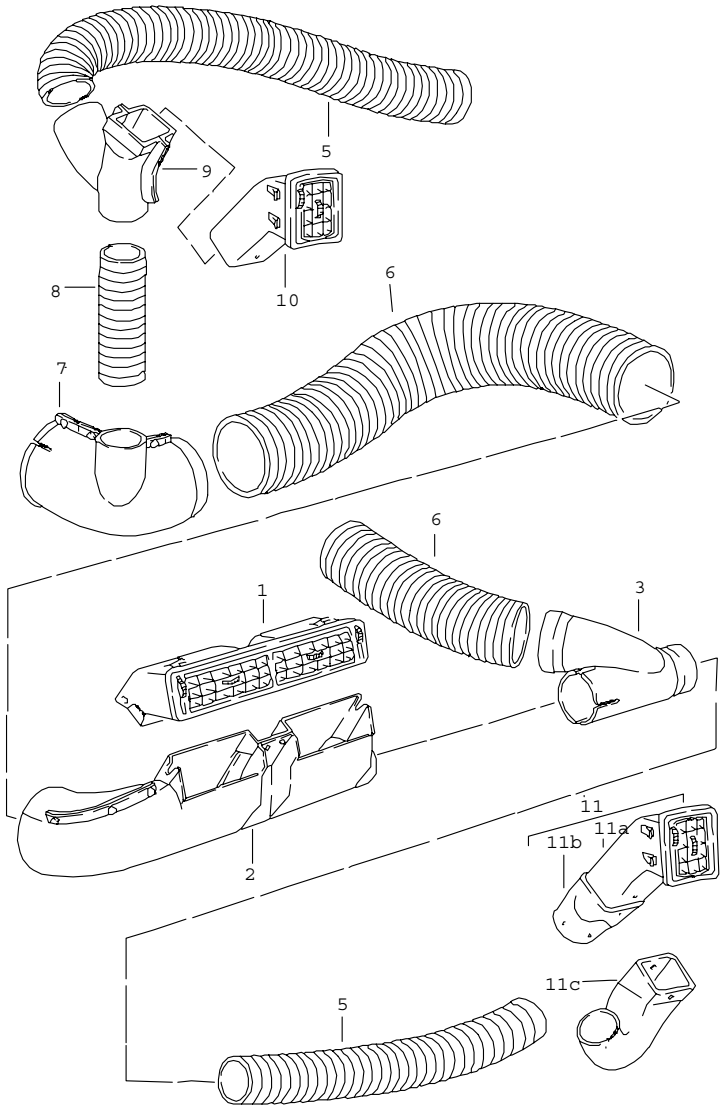

Pos	Part Number	Name	Remarks	Qty	Model
		air vent air hose right-hand drive			M 573
1	478 820 219	centre nozzle		1	
	01C	black			
2	E 478 820 217	air duct		1	
3	478 820 215	connecting piece		1	
4	478 820 235	air hose		1	
5	477 819 395	hose		2	
6	478 820 231	hose		1	
7	478 820 211	branch piece		1	
8	478 820 233	air hose		1	
9	478 820 213	connecting piece		1	
10	477 819 291	side vent	/L	1	
	01C	black			
11	477 819 232	side vent	/R -78	1	
11A	477 819 292	side vent	/R 79-	1	
	01C	black			
11B	477 819 717	connecting piece	/R -78	1	
11C	477 820 409	connecting piece	/R 79-	1	
		- -- E N D -- -			

Model	Year	MG	SG	Illustration	Restrictions	Update	11:15	06.04.2005	PORSCHE PET PORSCHE
924	79	8	13	813-15		187			

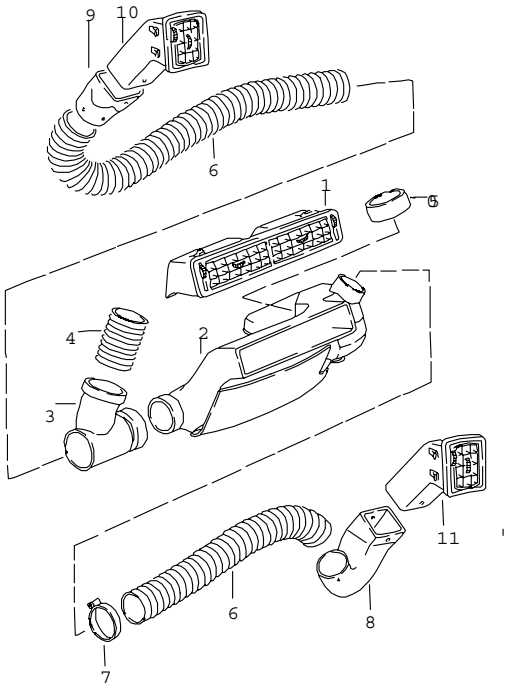

Pos	Part Number	Name	Remarks	Qty	Model
		air vent air hose left-hand drive	79		M 579
1	477 819 151 A	centre nozzle F >>92491 10211 F >>92494 01982		1	
1	477 819 173	centre nozzle		1	
	01C	black F 92491 10212>>92491 10475			
2	477 820 413	mixing chamber		1	
3	477 820 539	intermediate piece		1	
4	477 820 221	air hose		1	
5	477 820 427	air duct		1	
6	477 819 395	hose		2	
7	999 512 348 02	hose clamp		1	
-	999 513 003 40	tie-wrap		1	
8	477 820 409	connecting piece	/R	1	
9	477 819 717	connecting piece	/L	1	
10	477 819 291	side vent	/L	1	
	01C	black			
11	477 819 292	side vent	/R	1	
	01C	black			
		- -- E N D -- -			

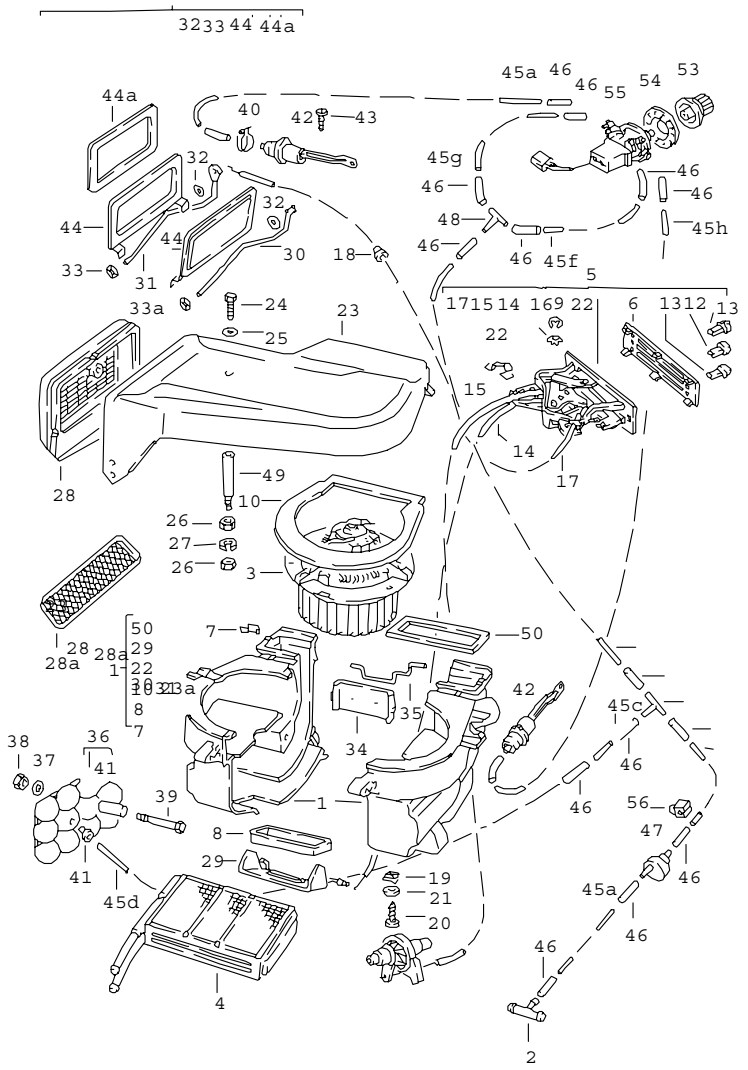

Pos	Part Number	Name	Remarks	Qty	Model
		heating left-hand drive	-78		M 573
1	E 321 819 014 A	flap control box		1	
2	321 611 813	t-socket		1	
(2)	321 611 813 C	t-piece		1	(S)
3	E 843 819 021	blower motor		1	
4	477 819 031 A	heat exchanger		1	
5	477 819 021 A	control switch		1	
6	477 819 043 A	cover F >>92481 01765		1	
6	E 477 819 043 C	cover F 92481 01766>>		1	924
7	321 819 059	clamp		6	
8	E 321 819 091	cover flap control box		1	
9	477 819 139	cup spring		2	
10	823 819 179	gasket		1	
12	477 819 319	knob centre		1	
13	477 819 319 A	knob		2	
14	477 819 279	traction		1	
15	477 819 341	traction		1	
16	900 116 003 02	circlip 4		2	
17	477 819 325	traction		1	
18	E 477 820 753	grommet		2	
19	999 591 722 02	speed nut B 4,8 X 19,8		1	
20	900 143 046 02	tapping screw B 4,8 X 16		1	
21	N 012 104 2	serrated lock washer A 5,3		1	
22	477 819 343	spring clamp		1	
23	477 820 113	cover		1	

Model	Year	MG	SG	Illustration	Restrictions	Update	11:15	06.04.2005	PORSCHE PET PORSCHE
924	79	8	13	813-20		187			

Pos	Part Number	Name	Remarks	Qty	Model
23A	477 820 011	air duct		1	
-	477 820 653	gasket cover		1	
24	900 075 017 02	hexagon-head bolt M 6 X 25		1	
25	N 011 524 7	washer A 6,4		2	
26	900 076 010 02	hexagon nut M 6		2	
27	N 012 006 4	lock ring B 6		1	
28	E 477 820 319	cover cover		1	
28A	E 477 820 327	grille		1	
-	E 999 591 455 02	clip		2	
29	E 843 820 365	flap		1	
30	477 820 373	axle for flap		1	
31	477 820 375	axle for flap		1	
32	900 025 003 02	washer A 5,3		2	
33	E 113 809 963	washer		1	
33A	999 591 459 00	clamping washer		1	
(33)	E 999 704 133 40	rubber washer		4	
34	E 843 820 385	air flap		1	
35	E 843 820 387	axle		1	
36	E 321 820 602	vacuum tank		1	
37	N 012 105 3	serrated lock washer A 6,4		1	
38	900 076 010 02	hexagon nut M 6		1	
39	E N 010 368 1	hexagon-head bolt M 6 X 62		1	
40	E N 023 503 2	hose clamp A 9 X 40 ZY.		2	
41	E 171 820 609	grommet		1	
42	843 820 625 C	vacuum unit		2	
43	N 013 970 5	tapping screw B 4,8 X 9,5		4	
44	477 820 645	flap		2	
44A	477 820 651 A	gasket for flap		2	
-	N 020 139 1	hose		*	
45A	-	950 MM		2	
45B	-	60 MM		1	
45C	-	30 MM		1	
45D	-	400 MM		1	
45E	-	610 MM		1	
45F	-	240 MM		1	
45G	-	210 MM		1	
45H	-	545 MM		1	
-	171 971 913	grommet vacuum line		1	
46	E 171 820 669	connecting hose		X	
47	843 820 675	check valve		1	
48	E 113 201 943 B	t-piece		2	
49	E 477 820 685	ABSTANDSSTUECK		1	
50	843 820 749	gasket		1	
53	477 959 513	knob		1	
54	477 959 517	rose		1	
55	E 477 959 519	switch		1	
-	E 477 963 365	terminal sleeve housing		1	
-	311 971 837	connector housing 4-pole		1	
56	999 591 380 02	cable clamp		2	
-	111 971 511	line distributor		1	

Pos	Part Number	Name	Remarks	Qty	Model	Pos	Part Number	Name	Remarks	Qty	Model
-	111 971 911 A	rubber sleeve		1							
-	111 971 977	plug with guide single pole		1							
-	411 941 189	grommet		1							
		- -- E N D -- -									

Model	Year	MG	SG	Illustration	Restrictions	Update				
924	79	8	13	813-25		187	11:16	06.04.2005	PORSCHE	PET	PORSCHE

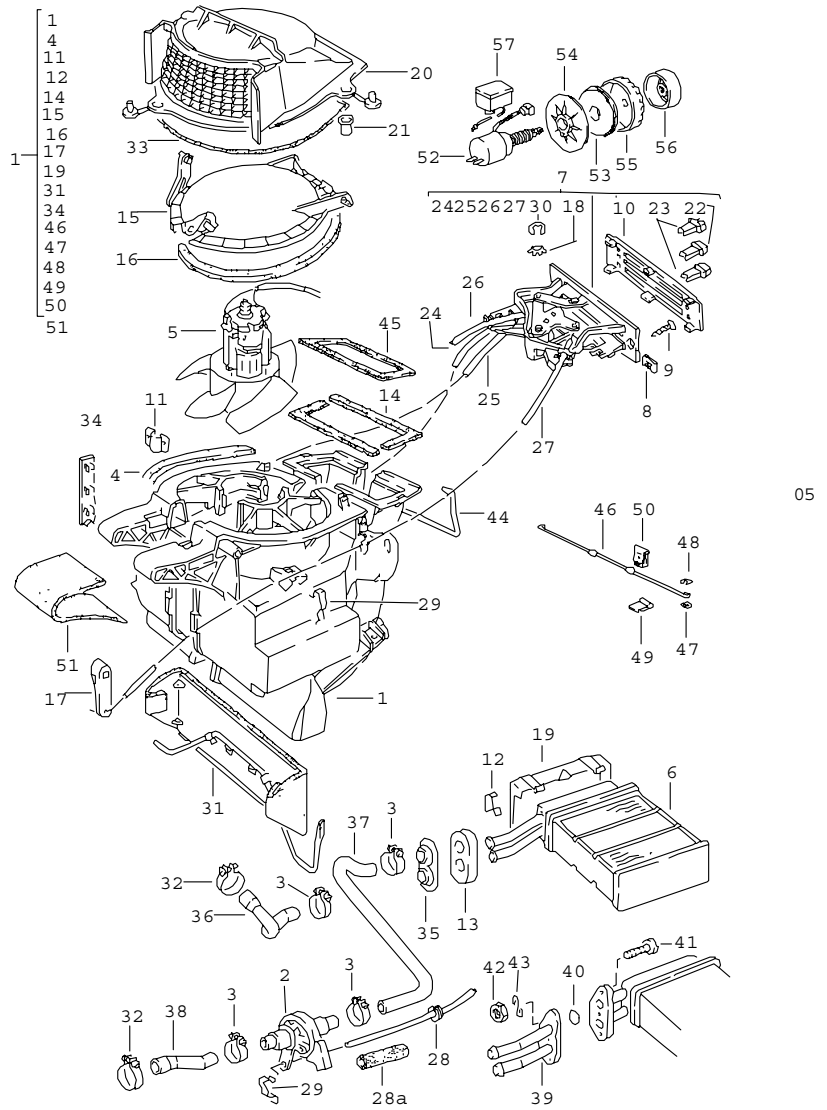

Pos	Part Number	Name	Remarks	Qty	Model
		heating	79		M 573
1	477 820 014	flap control box		1	
2	477 819 017	heater valve		1	
3	N 024 510 1	hose clamp LC 16-25		4	
4	321 819 019	gasket		2	
5	321 819 021	blower motor		1	
6	477 819 030	heat exchanger		1	
7	477 819 021 A	control switch		1	
8	477 819 789	speed nut 16 X 12,2		2	
9	E N 014 100 1	tapping screw B 4,8 X 25		2	
10	E 477 819 043 C	cover		1	
11	321 819 053	clamp		2	
12	321 819 059	clamp		7	
13	477 819 065	damping piece		1	
14	321 819 089	gasket		2	
15	321 819 107	flap		1	
16	321 819 109	gasket		1	
17	321 819 123	lever for flap		1	
18	477 819 139	cup spring		2	
19	477 819 347	cover		1	
20	477 819 245	cover flap		1	
21	477 819 253	grommet		3	
22	477 819 319	knob centre		1	
23	477 819 319 A	knob		2	
24	477 819 279	traction		1	
25	477 820 275	traction		1	

Pos	Part Number	Name	Remarks	Qty	Model
26	477 819 341	traction		1	
27	477 819 325	traction		1	
28	477 819 849	grommet		1	
28A	477 819 340	hose		1	
29	477 819 343	spring clamp		1	
30	900 116 003 02	circlip 4		2	
31	E 321 819 361	flap		1	
32	999 512 272 02	hose clamp LA 25 X 40		2	
33	000 043 172 00	sealing cord		*	
34	321 819 645	clip		1	
35	823 819 699 A	drain bush		1	
36	477 819 723	hose		1	
37	477 819 725	hose		1	
38	N 020 269 1	water hose		*	924
(38)	931 106 271 01	water hose		1	TURBO
39	477 819 869	connecting flange for heat exchanger		1	
40	021 101 173	sealing ring heat exchanger		2	
41	N 010 296 2	hexagon-head bolt M 5 X 18		3	
42	N 011 005 14	hexagon nut M 5		3	
43	N 012 225 2	spring washer A 5		3	
44	477 857 809	clamp		1	
45	477 857 887 A	gasket		1	
46	477 819 281	connecting rod		1	
47	N 012 225 2	spring washer		2	
48	900 116 003 02	circlip		2	
49	477 819 343	spring clamp		1	
50	477 819 285	clip		1	
51	477 819 345	sealing strip		1	
52	477 959 530	air-conditioning switch		1	
53	477 959 526	spacer		1	
54	477 959 527	fastening washer		1	
55	477 959 528	adjusting wheel		1	
56	477 959 529	knob		1	
57	477 959 531	booster		1	
-	477 820 523	water drain hose		1	
		- -- E N D -- -			

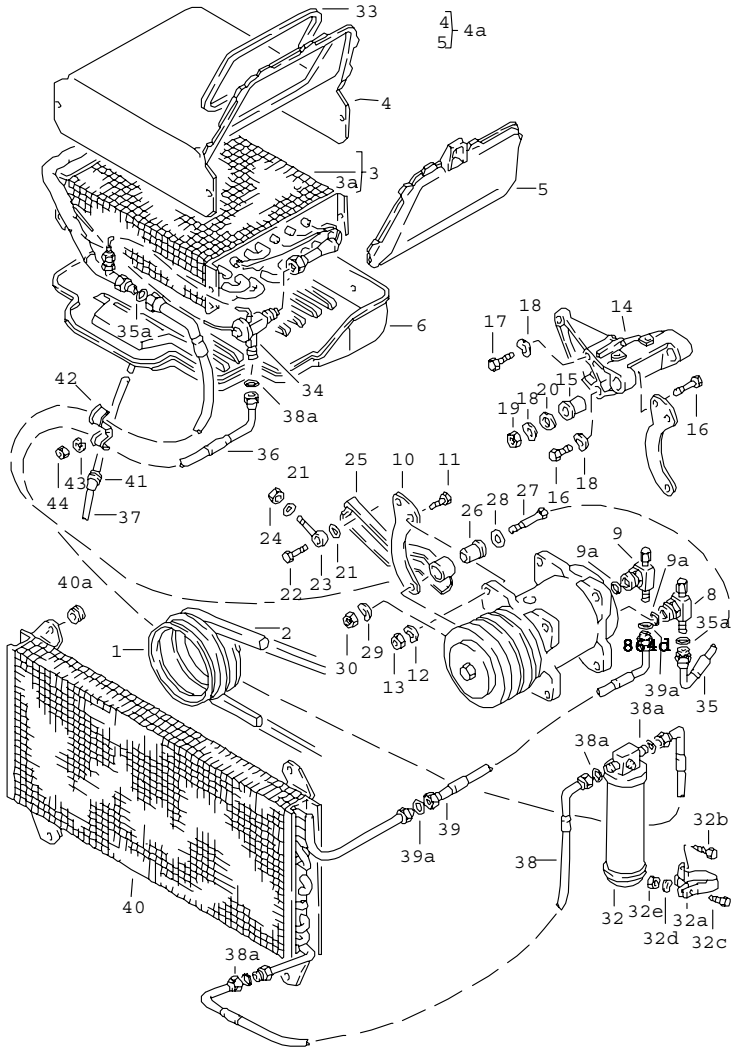

Pos	Part Number	Name	Remarks	Qty	Model
		air conditioner left-hand drive	-79		M 573 924
(1)	046 105 255 F	v-belt pulley		1	
-	N 014 726 3	pan-head screw M 8 X 30		4	
2	047 260 849	v-belt		1	
3	E 477 820 013	evaporator		1	
-	E 477 820 017 A	evaporator housing		1	
4A	477 820 015 A	evaporator housing		1	
5	477 820 019 A	cover evaporator housing		1	
6	477 820 031 A	drip tray		1	
8	E 059 260 855 A	suction valve		1	
9	E 059 260 865 A	pressure valve		1	
9A	E 477 298 821	o-ring		2	
		mount compressor see tpi GRUPPE 8,NR.8			
10	048 260 885 A	support		2	
11	E 900 075 148 02	hexagon-head bolt M 10 X 32		3	
12	N 012 230 6	spring washer B 10		3	
13	N 011 010 6	hexagon nut M 10		3	
14	E 046 260 889 A	bracket		1	
15	048 260 905 B	rubber mounting		2	
16	N 010 445 3	hexagon-head bolt M 10 X 45		3	
17	N 010 455 3	screw M 10 X 55		2	
18	N 012 230 6	spring washer B 10		5	
19	N 011 010 6	hexagon nut M 10		2	

Pos	Part Number	Name	Remarks	Qty	Model
20	111 857 707 A	spacer		2	
21	N 011 525 13	washer		2	
22	N 010 244 11	hexagon-head bolt M 8 X 30		1	
23	N 016 078 1	eye screw M 8 X 60		1	
24	311 101 463	hexagon nut M 8		1	
25	047 260 903 B	clamp		1	
26	048 260 905 B	rubber mounting		1	
27	N 010 460 2	hexagon-head bolt M 10 X 60		1	
28	N 011 527 12	washer A 10,5		1	
29	N 012 230 6	spring washer B 10		1	
30	N 011 010 6	hexagon nut M 10		1	
32	944 573 943 00	desiccator		1	
32A	477 820 195	support fluid tank		1	
32B	N 013 884 5	tapping screw B 4,8 X 13		2	
32C	N 010 264 4	hexagon-head bolt M 5 X 20		1	
32D	N 012 005 3	lock ring 5		1	
32E	N 011 005 14	hexagon nut M 5		1	
33	E 477 820 655	gasket evaporator housing		1	
-	E 477 820 657	gasket		1	
-	999 511 066 02	clamp		1	
-	N 010 215 13	hexagon-head bolt M 6 X 15		1	
-	900 076 010 02	hexagon nut M 6		1	
-	N 012 006 4	lock ring B 6		1	
34	E 843 820 679	expansion valve		1	
35	E 477 820 723	hose compressor evaporator		1	
35A	E 803 260 749 B	o-ring		2	
36	E 477 820 725	hose fluid tank evaporator		1	
37	477 820 727 B	hose		1	
38	E 477 820 729	hose condenser fluid tank o-ring		1 4	
-	E 843 260 762	clip		1	
-	N 013 970 5	tapping screw B 4,8 X 9,5		1	
39	477 820 731	hose compressor condenser		1	
39A	E 803 260 749 A	o-ring		2	
40	477 820 751 A	condenser		1	
40A	477 820 773	grommet		4	
41	477 820 752	grommet		1	
42	477 820 757	clip		3	
43	E N 012 026 1	lock ring B 6		3	
44	900 076 010 02	hexagon nut M 6		3	

Pos	Part Number	Name	Remarks	Qty	Model
		version reinforced for compressor installation see illustrations 8/13/40 can instead of POS.24-42 mounted become			
(14)	047 260 877 E	bracket		1	
-	E 047 260 823	vibration damper		1	
(17)	E 900 074 065 02	hexagon-head bolt M 10 X 70		1	
(16)	900 074 063 02	hexagon-head bolt M 10 X 55		2	
(18)	N 012 230 6	spring washer B 10		3	
(10)	047 260 883 A	support	/V	1	
(10)	E 047 260 859 A	support	/H	1	
11	E 900 075 148 02	hexagon-head bolt M 10 X 32		4	
12	N 012 230 6	spring washer B 10		4	
13	N 011 010 6	hexagon nut M 10		4	
-	N 010 494 4	hexagon-head bolt M 10 X 125		1	
-	900 025 008 09	washer A 10,5		2	
-	N 011 010 6	hexagon nut M 10		1	
(25)	047 260 903 B	clamp		1	
-	N 012 230 6	spring washer B 10		1	
-	N 011 010 6	hexagon nut M 10		1	
-	047 260 947 A	washer		1	
(23)	E N 900 798 01	eye screw		1	
(22)	900 075 043 02	hexagon-head bolt M 10 X 30		1	
(21)	211 843 661	washer		1	
(24)	311 101 463	hexagon nut M 8		1	

- -- E N D -- -

Model	Year	MG	SG	Illustration	Restrictions	Update				
924	79	8	13	813-35		187	11:16	06.04.2005	PORSCHE	PET	PORSCHE

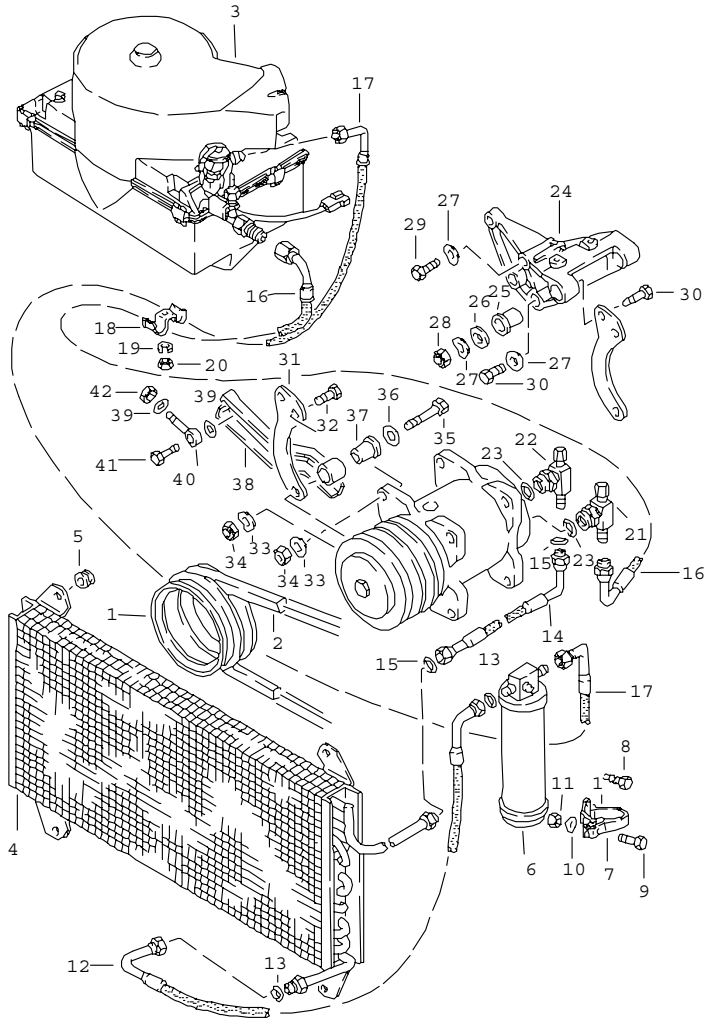

Pos	Part Number	Name	Remarks	Qty	Model
		air conditioner right-hand drive	-78		M 573 924
1	477 105 255	v-belt pulley		1	
2	047 260 849	v-belt		1	
3	478 820 017	evaporator see group 8/13/50		1	
4	477 820 751 A	condenser		1	
5	477 820 773	grommet		4	
6	477 820 193	fluid tank		1	
7	477 820 195	support fluid tank		1	
8	N 013 884 5	tapping screw B 4,8 X 13		2	
9	N 010 264 4	hexagon-head bolt M 5 X 20		1	
10	N 012 005 3	lock ring 5		1	
11	N 011 005 14	hexagon nut M 5		1	
12	E 477 820 729	hose condenser fluid tank		1	
13	803 260 749	o-ring		2	
14	477 820 731	hose compressor condenser		1	
15	E 803 260 749 A	o-ring		2	
16	478 820 723 A	hose compressor evaporator		1	
17	478 820 735	refrigerant line fluid tank evaporator		1	
18	477 820 757	clip		2	
19	E N 012 026 1	lock ring B 6		2	

Pos	Part Number	Name	Remarks	Qty	Model
20	900 076 010 02	hexagon nut M 6		2	
21	E 059 260 855 A	suction valve		1	
22	E 059 260 865 A	pressure valve		1	
23	E 477 298 821	o-ring		2	
		mount compressor see tpi group 8 , NR.8			
24	E 046 260 889 A	bracket		1	
25	048 260 905 B	rubber mounting		2	
26	111 857 707 A	spacer		2	
27	N 012 230 6	spring washer B 10		5	
28	N 011 010 6	hexagon nut M 10		2	
29	N 010 455 3	screw M 10 X 55		2	
30	N 010 445 3	hexagon-head bolt M 10 X 45		3	
31	048 260 885 A	support		2	
32	E 900 075 148 02	hexagon-head bolt M 10 X 32		3	
33	N 012 230 6	spring washer B 10		4	
34	N 011 010 6	hexagon nut M 10		4	
35	N 010 460 2	hexagon-head bolt M 10 X 60		1	
36	N 011 527 12	washer A 10,5		1	
37	048 260 905 B	rubber mounting		1	
38	047 260 903 B	clamp		1	
39	N 011 525 13	washer		2	
40	N 016 078 1	eye screw M 8 X 60		1	
41	N 010 244 11	hexagon-head bolt M 8 X 30		1	
42	311 101 463	hexagon nut M 8		1	
		version reinforced for compressor installation see illustrations 8/13/40 can instead of POS.24-42 mounted become			
(24)	047 260 877 E	bracket		1	
-	E 047 260 823	vibration damper		1	
(29)	E 900 074 065 02	hexagon-head bolt M 10 X 70		1	
(30)	900 074 063 02	hexagon-head bolt M 10 X 55		2	
(27)	N 012 230 6	spring washer B 10		3	
(31)	047 260 883 A	support	/V	1	
(31)	E 047 260 859 A	support	/H	1	
32	E 900 075 148 02	hexagon-head bolt M 10 X 32		4	
33	N 012 230 6	spring washer B 10		4	
34	N 011 010 6	hexagon nut M 10		4	
-	N 010 494 4	hexagon-head bolt M 10 X 125		1	
-	900 025 008 09	washer A 10,5		2	
-	N 011 010 6	hexagon nut M 10		1	
(38)	047 260 903 B	clamp		1	
-	N 012 230 6	spring washer B 10		1	

Pos	Part Number	Name	Remarks	Qty	Model	Pos	Part Number	Name	Remarks	Qty	Model
-	N 011 010 6	hexagon nut M 10		1							
-	047 260 947 A	washer		1							
(40)	E N 900 798 01	eye screw		1							
(41)	900 075 043 02	hexagon-head bolt M 10 X 30		1							
39	211 843 661	washer		1							
42	311 101 463	hexagon nut M 8		1							
		- -- E N D -- -									

Model	Year	MG	SG	Illustration	Restrictions	Update	11:17	06.04.2005	PORSCHE	PET	PORSCHE
924	79	8	13	813-40		187					

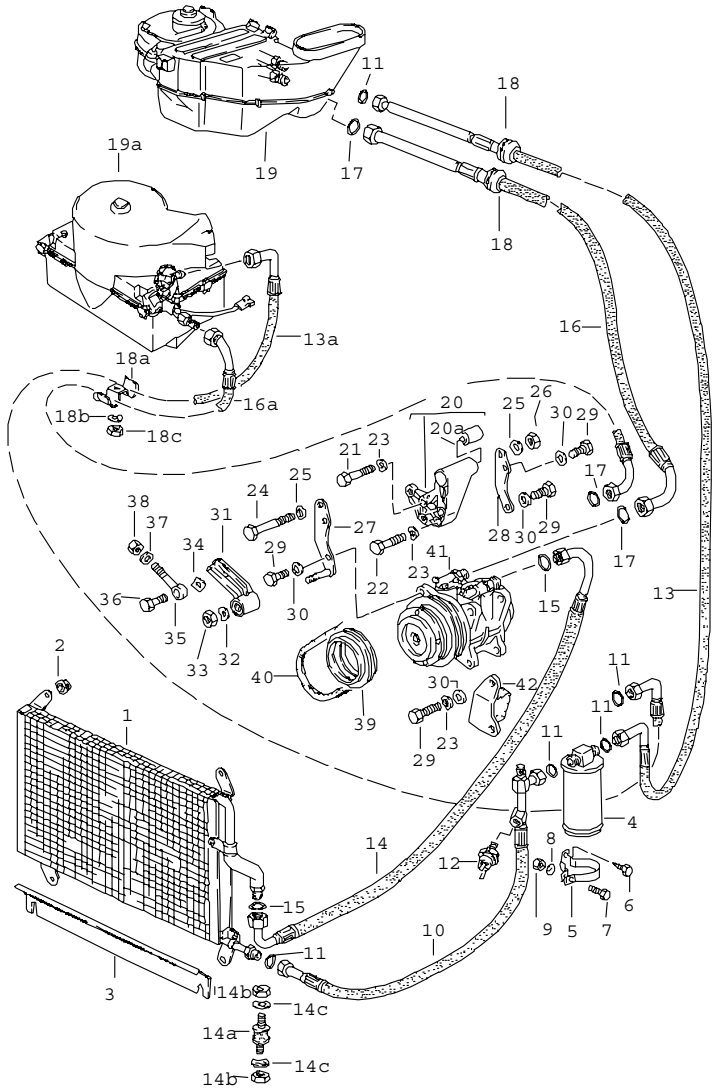

Pos	Part Number	Name	Remarks	Qty	Model
		air conditioner	79		M 573
1	477 820 751 B	condenser		1	
2	477 820 773	grommet		4	
3	477 853 717 A	cooling air duct		1	
4	477 820 193	fluid tank		1	
5	477 820 195	support fluid tank		1	
6	N 013 884 5	tapping screw B 4,8 X 13		2	
7	N 010 264 4	hexagon-head bolt M 5 X 20		1	
8	N 012 005 3	lock ring 5		1	
9	N 011 005 14	hexagon nut M 5		1	
10	477 820 423	hose condenser fluid tank		1	924
10	477 820 423	hose condenser fluid tank	/RL	1	TURBO
(10)	477 820 423 A	hose condenser fluid tank	/LL	1	TURBO
11	477 820 489	o-ring		4	
12	959 613 137 00	low pressure switch		1	
13	477 820 424	hose fluid tank evaporator	/LL	1	
13A	478 820 735	hose fluid tank evaporator	/RL	1	
-	999 513 003 40	tie-wrap		1	
14	477 820 422 B	hose compressor condenser		1	
14A	810 906 219 A	bonded rubber mounting		1	

Pos	Part Number	Name	Remarks	Qty	Model
14B	900 076 010 02	hexagon nut M 6		2	
14C	N 012 007 2	lock ring A 6		2	
15	A 477 820 491	o-ring		2	
15	999 707 250 40	o-ring		2	
16	477 820 425	hose compressor evaporator	/LL	1	
(16)	477 820 425 A	hose compressor evaporator	/LL	1	TURBO
16	478 820 723 A	hose compressor evaporator	/RL	1	
17	478 820 731	o-ring		2	
18	901 573 143 00	rubber sleeve		2	
18A	477 820 757	clip	/RL	2	
18B	E N 012 026 1	lock ring B 6	/RL	2	
18C	900 076 010 02	hexagon nut M 6	/RL	2	
19	E 477 820 002	air conditioner see group 8/13/45	/LL	1	
19A	478 820 017	evaporator see group 8/13/50	/RL	1	
20	047 260 877 E	bracket		1	924
(20)	931 101 014 00	bracket		1	TURBO
20A	047 260 905 C	rubber mounting		2	
21	E 900 074 065 02	hexagon-head bolt M 10 X 70		1	
22	900 074 063 02	hexagon-head bolt M 10 X 55		2	
23	N 012 230 6	spring washer B 10		3	
24	N 010 494 4	hexagon-head bolt M 10 X 125		1	
25	900 025 008 09	washer A 10,5		2	
26	N 011 010 6	hexagon nut M 10		1	
27	047 260 883 B	support compressor	/V	1	
28	047 260 859 C	support	/H	1	
29	N 040 125 1	hexagon-head bolt M 10 X 30		4	
30	900 025 008 09	washer A 10,5		4	
31	047 260 903 B	clamp		1	
32	N 012 230 6	spring washer B 10			
33	N 011 010 6	hexagon nut M 10		1	
34	047 260 947 A	washer		1	
35	E N 900 798 01	eye screw		1	
36	900 075 043 02	hexagon-head bolt M 10 X 30		1	
37	A 211 843 661	washer		1	
37	N 011 525 13	washer		1	
38	311 101 463	hexagon nut M 8		1	
39	046 105 255 F	v-belt pulley		1	
40	047 260 849 A	v-belt		1	
41	047 260 803	compressor see group 8/13/60		1	
42	047 260 823 B	vibration damper		1	

- -- E N D -- -

Model	Year	MG	SG	Illustration	Restrictions	Update	11:17	06.04.2005	PORSCHE PET PORSCHE
924	79	8	13	813-45		187			

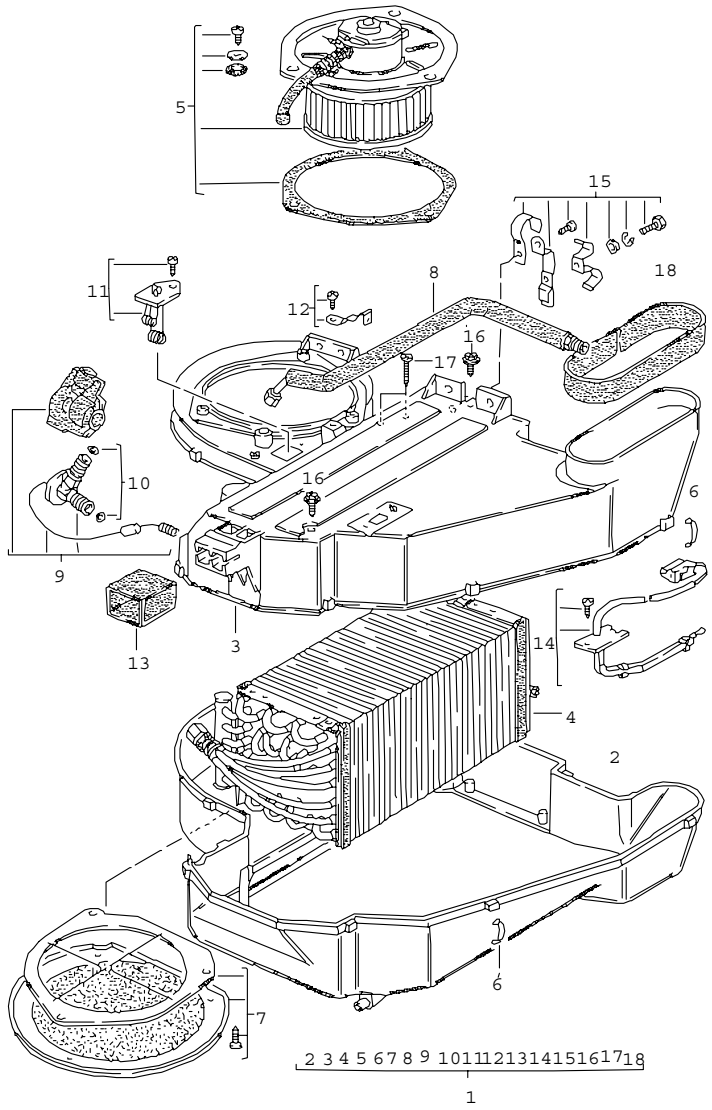

Pos	Part Number	Name	Remarks	Qty	Model
		air conditioner	/LL 79		M 573
1	E 477 820 002	air conditioner		1	
2	477 820 483	suction housing lower part		1	
3	477 820 913	housing upper part		1	
4	477 820 903	evaporator		1	
5	477 820 905	blower		1	
6	477 820 449	clamp		25	
7	477 820 907	air cleaner		1	
8	477 820 459	pressure line		1	
9	477 820 909	expansion valve		1	
10	477 820 911	set of o-rings for expansion valve		1	
11	477 820 915	resistor		1	
12	E 477 820 917	retaining bow		1	
13	477 820 447 A	rubber boot		1	
14	477 820 901	temperature sensor		1	
15	E 477 820 919	clamp		1	
16	E 477 820 437	tapping screw		2	
17	E 477 820 435 A	tapping screw		2	
18	477 820 507 A	insulator		1	
-	477 820 523	water drain hose		1	
		- -- E N D -- -			

Model	Year	MG	SG	Illustration	Restrictions	Update				
924	79	8	13	813-50		187	11:17	06.04.2005	PORSCHE	PET	PORSCHE

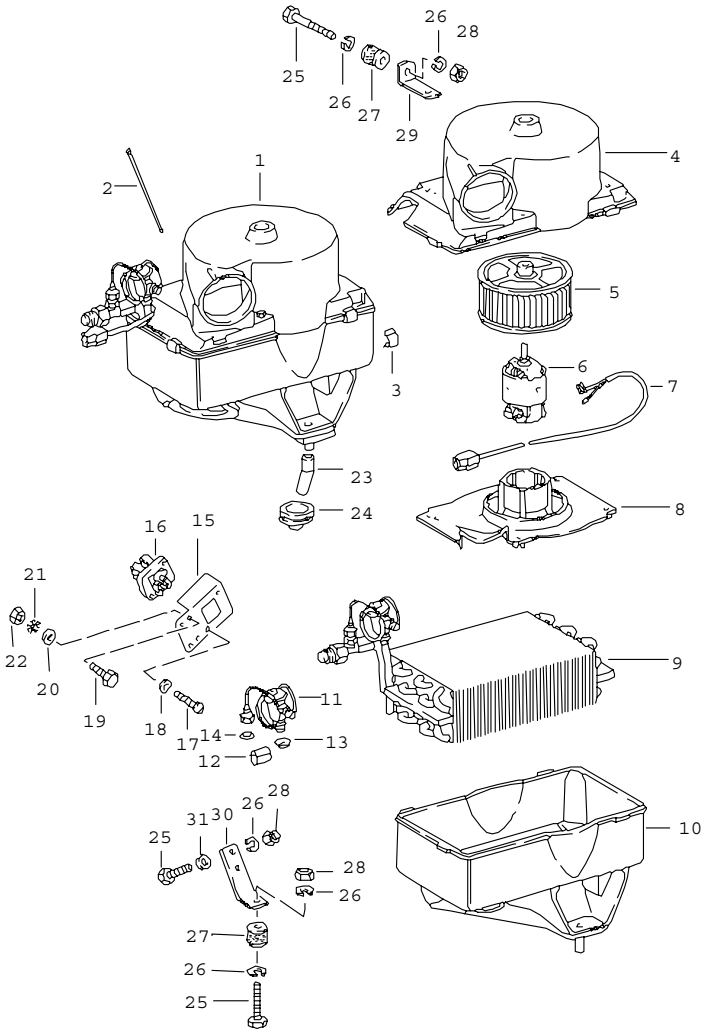

Pos	Part Number	Name	Remarks	Qty	Model
		evaporator	/RL		M 573
1	478 820 017	evaporator with housing		1	
2	901 573 903 00	guide tube for temperature switch		1	
3	901 573 904 00	tensioning spring		4	
4	911 573 023 00	housing cover		1	
5	901 573 906 00	fan		1	
6	901 624 901 00	electric motor		1	
7	E 901 612 084 00	wiring harness		1	
8	911 573 323 00	engine support		1	
9	901 573 907 00	evaporator		1	
10	478 898 117	housing lower part		1	
11	901 573 915 00	expansion valve		1	
12	901 573 914 00	clip		1	
13	901 573 147 00	gasket		1	
14	901 573 916 00	gasket		1	
15	478 820 209	bracket		1	
16	911 618 151 00	thermo bi-metal switch		1	
17	900 146 011 02	oval-head screw AM 4 X 10		2	
18	N 012 224 3	spring washer A 4		2	
19	N 010 207 6	hexagon-head bolt M 5 X 12		2	
20	900 025 003 02	washer A 5,3		2	
21	N 012 130 2	shake-proof washer A 5,3		2	
22	N 011 005 14	hexagon nut M 5		2	
-	N 020 363 1	hose 15 X 2,5		*	

Pos	Part Number	Name	Remarks	Qty	Model
23	-	70 MM		1	
24	901 573 143 00	rubber sleeve		3	
25	N 010 210 13	hexagon-head bolt M 6 X 10		4	
26	N 012 006 4	lock ring B 6		6	
27	999 703 302 00	silentbloc		2	
28	900 076 010 02	hexagon nut M 6		4	
29	478 820 201	angle	/R	1	
30	478 820 207	angle lower		1	
31	N 011 524 7	washer A 6,4		2	
		- -- E N D -- -			

Pos	Part Number	Name	Remarks	Qty	Model

Model	Year	MG	SG	Illustration	Restrictions	Update			
924	79	8	13	813-55		187	11:18	06.04.2005	PORSCHE PET PORSCHE

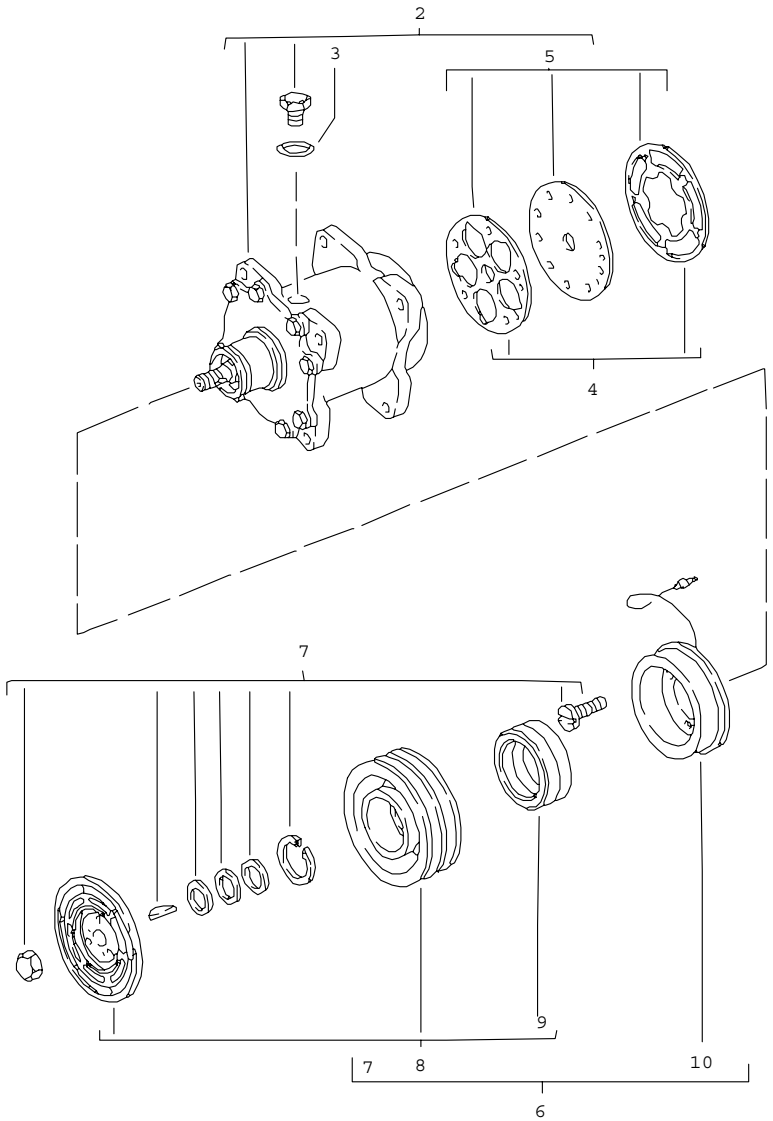

Pos	Part Number	Name	Remarks	Qty	Model
		compressor	-78		M 573
2	E 477 298 809	compressor		1	
3	E 477 298 801	o-ring		1	
4	477 298 805	gasket set for valve plate		1	
5	477 298 807	valve plate		1	
6	477 298 811	clutch		1	
7	477 298 813	parts set		1	
8	477 298 815	clutch plate pulley bearing		1	
9	E 477 298 817	set of bearings		1	
10	E 477 298 803	solenoid coil		1	
		- -- E N D -- -			

Model	Year	MG	SG	Illustration	Restrictions	Update	11:18	06.04.2005	PORSCHE	PET	PORSCHE
924	79	8	13	813-60		187					

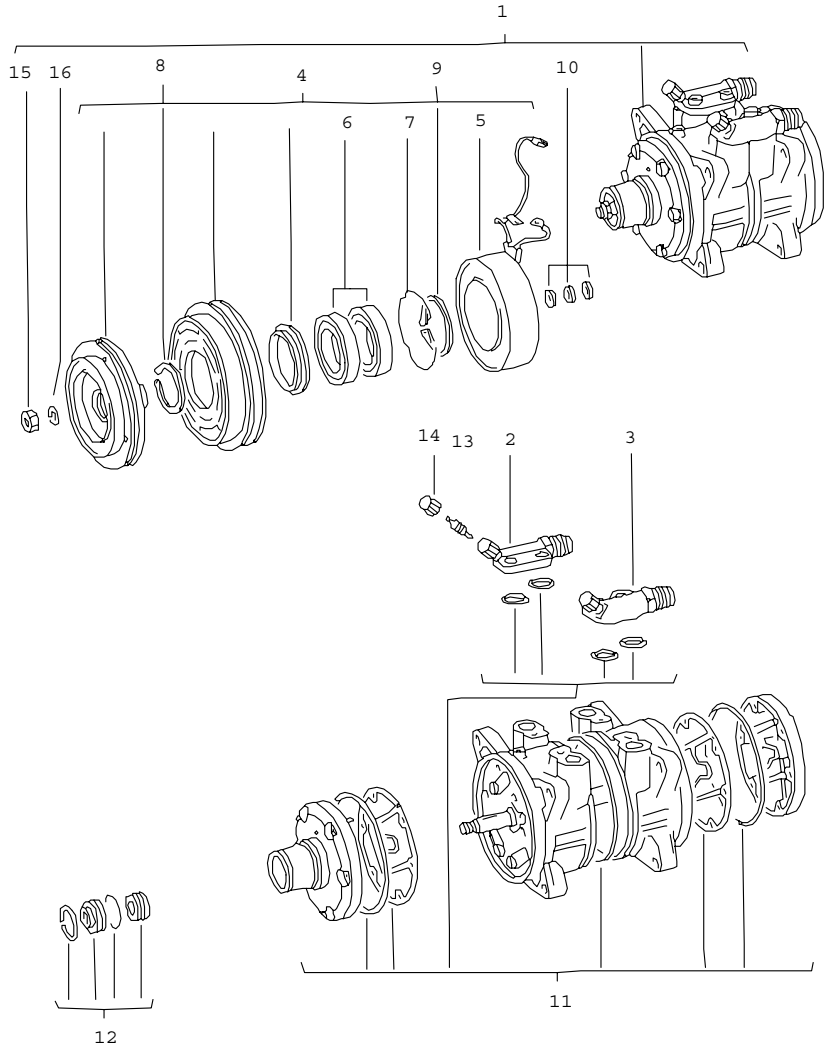

Pos	Part Number	Name	Remarks	Qty	Model
		compressor	79		M 573
1	047 260 803	compressor		1	
2	477 298 839	pressure valve		1	
3	477 298 837	suction valve		1	
4	477 298 823	clutch		1	
5	477 298 825	solenoid coil		1	
6	477 298 831	set of bearings		1	
7	477 298 827	retaining spring		1	
8	477 298 841	circlip		1	
9	E 477 298 843	circlip		1	
10	477 298 829	spacer 0,1 MM		X	
(10)	477 298 829 A	spacer 0,2 MM		X	
(10)	477 298 829 B	spacer 0,5 MM		X	
(10)	477 298 829 C	spacer 0,8 MM		X	
(10)	477 298 829 B	spacer 1,0 MM		X	
11	E 477 298 833	set of seals		1	
12	477 298 835	set of seals		1	
13	928 573 908 03	valve insert		2	
14	928 573 909 02	cap		2	
15	N 011 008 8	hexagon nut M 8		1	
16	900 027 015 02	lock ring B 8		1	
-	E 930 126 905 00	spring		1	
		- -- E N D -- -			

Model	Year	MG	SG	Illustration	Restrictions	Update		
924	79	8	98	REP		187	8:47	12.04.2005

Pos	Part Number	Name	Remarks	Qty	Model
		repair kits			
>>	> 477 898 081	lock cylinder 1 set for door handle ignition starter switch rear lid lock comprising:		1	
-	477 898 082	lock cylinder lock cylinder for door handle lock cylinder for ignition starter switch		1 2 1	
-	944 538 933 00	key S 91 B sealing set		2 1	
>>	> 477 898 011 A	sealing set for windscreen		1	
>>	> 477 898 025	installation set door mirror electrically adjustable heatable plan not for comprising:	/LL/L	1	 (J)
-	911 731 043 00	mirror housing		1	
-	928 731 141 06	mirror base		1	
-	999 143 003 02	hexagon-head bolt M 5 X 10		3	
-	911 731 027 02	frame with transmission		1	
-	911 731 035 02	mirror glass		1	
-	999 703 128 40	grommet for mirror glass		3	
-	477 831 139 C	reinforcement		1	
-	928 531 235 03	threaded piece		1	
-	N 013 295 1	tensioning sleeve		1	
-	944 731 505 00	desk pad		1	
-	911 731 257 02	guide tube		1	

Model	Year	MG	SG	Illustration	Restrictions	Update		
924	79	8	98	REP		187	8:47	12.04.2005

Pos	Part Number	Name	Remarks	Qty	Model
-	911 731 345 02	adjusting washer lower		1	
-	911 731 347 00	adjusting washer upper		1	
-	911 731 029 01	compression spring		1	
-	900 186 042 02	pan-head screw M 5 X 40		1	
-	E 477 867 181	mounting piece		1	
-	N 014 090 5	tapping screw 3,9 X 13		2	
-	999 507 071 00	speed nut		2	
-	911 613 115 00	switch		1	
-	928 555 463 02	threaded bush		1	
-	928 613 462 00	knob		1	
-	477 971 111	harness door mirror driver's door		1	
-	477 971 115 A	harness door mirror dashboard		1	
-	477 971 910	bellows		1	
-	803 971 979	plug socket 7-pole		1	
>>	> 477 898 026	installation set door mirror electrically adjustable heatable plan not for comprising:	/LL/R	1	(S)(N)
-	911 731 044 00	mirror housing		1	
-	928 731 143 08	mirror base		1	
-	999 143 003 02	hexagon-head bolt M 5 X 10		3	
-	911 731 028 02	frame with transmission		1	
-	911 731 035 02	mirror glass plan		1	

Model	Year	MG	SG	Illustration	Restrictions	Update		
924	79	8	98	REP		187	8:47	12.04.2005

Pos	Part Number	Name	Remarks	Qty	Model
-	999 703 128 40	grommet for mirror glass		3	
-	477 831 140 C	reinforcement		1	
-	928 531 235 03	threaded piece		1	
-	N 013 295 1	tensioning sleeve		1	
-	944 731 508 00	desk pad		1	
-	911 731 257 02	guide tube		1	
-	911 731 345 02	adjusting washer lower		1	
-	911 731 347 00	adjusting washer upper		1	
-	911 731 029 01	compression spring		1	
-	900 186 042 02	pan-head screw M 5 X 40		1	
-	E 477 867 181	mounting piece		1	
-	N 014 090 5	tapping screw 3,9 X 13		2	
-	999 507 071 00	speed nut		2	
-	911 613 115 00	switch		1	
-	928 555 463 02	threaded bush		1	
-	928 613 462 00	knob		1	
-	477 971 113	harness door mirror passenger's door		1	
-	477 971 115	harness door mirror dashboard		1	
-	477 971 910	bellows		1	
-	477 955 703	rocker switch		1	
-	803 971 979	plug socket 7-pole		1	
		- -- E N D -- -			

Model	Year	MG	SG	Illustration	Restrictions	Update	11:18	06.04.2005	PORSCHE PET PORSCHE
924	79	9	01	901-00		187			

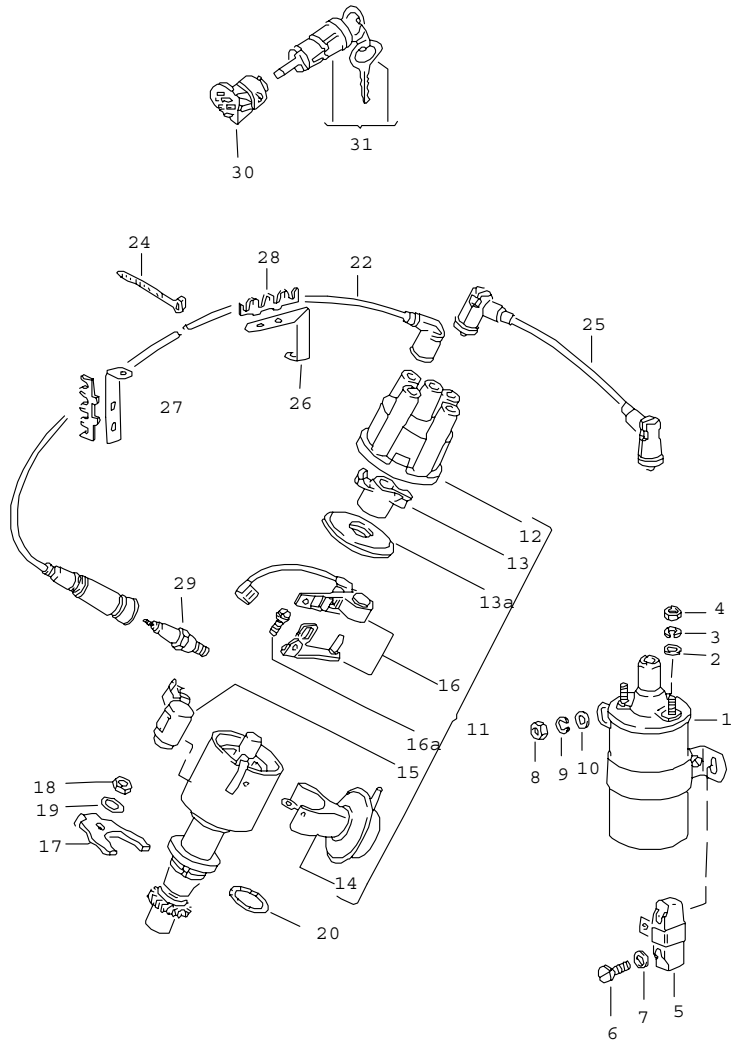

Pos	Part Number	Name	Remarks	Qty	Model
		engine electr. equipment 1			924
1	E 059 905 105 B	ignition coil		1	
2	900 025 003 02	washer		2	
3	N 012 005 3	lock ring		2	
4	N 011 005 14	hexagon nut		2	
5	E 059 905 109	series resistor	-78	1	
6	E N 014 121 2	oval-head screw AM 4 X 6		2	
7	N 012 004 2	lock ring		2	
8	900 076 010 02	hexagon nut		2	
9	N 012 006 4	lock ring		2	
10	N 011 666 7	washer		2	
11	E 047 905 205 B	distributor		1	
12	E 113 905 207 C	distributor cap		1	
13	055 905 225 B	rotor		1	
13A	039 905 241	dust cover		1	
14	E 047 905 271 A	vacuum unit		1	
15	060 905 295	condenser		1	
16	616 602 226 02	contact breaker point 1 set		1	
16A	058 998 211	parts kit		1	
17	E 056 905 251 D	support		1	
18	N 011 008 8	hexagon nut		1	
19	N 012 241 11	spring washer B 8 X 15		1	
20	* 056 905 261	gasket		1	
22	E 046 905 431 E	ignition lead cylinder 1		1	
22	046 905 433 E	ignition lead cylinder 2		1	
22	046 905 435 E	ignition lead cyl. 3		1	

Pos	Part Number	Name	Remarks	Qty	Model	Pos	Part Number	Name	Remarks	Qty	Model
22	E 046 905 437 E	ignition lead cyl. 4		1							
24	N 020 902 1	tie-wrap 6,5 X 210		2							
25	N 038 889 1	ignition lead		1							
26	047 905 477	support ignition lead		1							
27	046 905 477	support ignition lead		1							
28	E 052 905 471 B	cable holder ignition lead		2							
29	999 170 165 90	spark plug - bosch - W 5 DC		4							
30	111 905 865 L	ignition starter switch		1							
31	* 477 905 855 C	lock cylinder with keys w/o stipulated lock number		1							
(31)	477 905 855 D	lock cylinder with keys with stipulated lock-no.		1							
		- -- E N D -- -									

Model	Year	MG	SG	Illustration	Restrictions	Update			
924	79	9	01	901-05		187	11:18	06.04.2005	PORSCHE PET PORSCHE

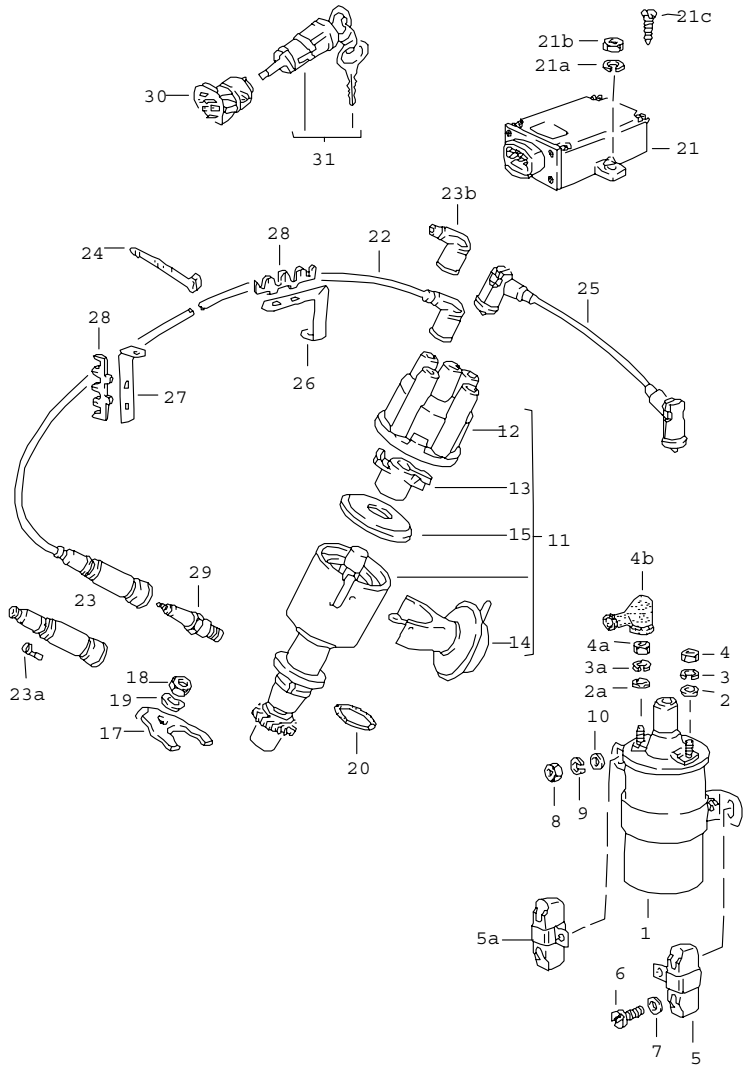

Pos	Part Number	Name	Remarks	Qty	Model
		electr. equipment-engine 2			TURBO
		see technical information GR.2 NR. 2/86			
1	046 905 105	ignition coil		1	
2	900 025 003 02	washer		1	
2A	N 011 524 7	washer		1	
3	N 012 005 3	lock ring		1	
3A	N 012 006 4	lock ring		1	
4	N 011 005 14	hexagon nut		1	
4A	900 076 010 02	hexagon nut		1	
4B	311 971 901	protection cap		1	
6	E N 014 121 2	oval-head screw AM 4 X 6		4	
7	N 012 004 2	lock ring		4	
8	900 076 010 02	hexagon nut		2	
9	N 012 006 4	lock ring		2	
10	N 011 666 7	washer		2	
(11)	E 931 602 030 00	distributor		1	
12	E 113 905 207 C	distributor cap		1	
(13)	E 931 602 904 00	rotor		1	
(14)	931 602 913 00	vacuum unit		1	
15	039 905 241	dust cover		1	
17	A 056 905 251 A	support		1	
17	E 056 905 251 D	support		1	
18	N 011 008 8	hexagon nut		1	
19	N 012 241 11	spring washer B 8 X 15		1	
20	* 056 905 261	gasket		1	
(21)	477 905 351 B	switch unit		1	
21A	900 025 003 02	washer		2	

Pos	Part Number	Name	Remarks	Qty	Model
21C	900 143 046 02	tapping screw 4,8 X 16	79-	2	
22	931 609 105 01	ignition lead cylinder 1		1	
22	931 609 105 02	ignition lead cylinder 2		1	
22	931 609 105 03	ignition lead cyl. 3		1	
22	931 609 105 04	ignition lead cyl. 4		1	
23	477 905 447	spark plug suppressor cap		4	
23A	036 905 423	ignition cable socket		4	
23B	036 035 281	suppressor cap		4	
24	N 020 902 1	tie-wrap 6,5 X 210		2	
25	N 038 889 1	ignition lead ignition coil distributor		1	
(26)	931 609 313 00	support ignition lead		1	
(27)	047 133 688	support ignition lead		1	
28	E 052 905 471 B	cable holder ignition lead		2	
29	999 170 175 90	spark plug - bosch - WR 6 DS		4	
(29)	999 170 140 90	spark plug - bosch - W 4 CS		4	TURBO
30	111 905 865 L	ignition starter switch		1	
31	477 905 855 C	lock cylinder with keys w/o stipulated lock number		1	
(31)	477 905 855 D	lock cylinder with keys with stipulated lock-no.		1	
		- -- E N D -- -			

Model	Year	MG	SG	Illustration	Restrictions	Update	11:19	06.04.2005	PORSCHE PET PORSCHE
924	79	9	02	902-00		187			

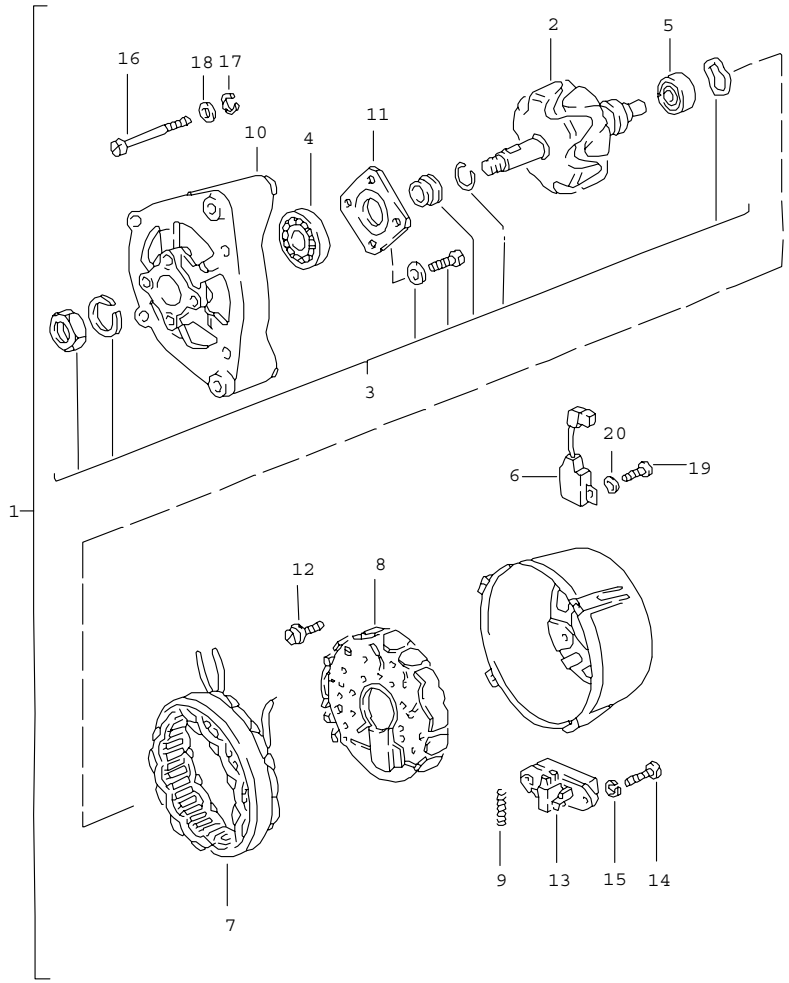

Pos	Part Number	Name	Remarks	Qty	Model
		generator			
1	E 068 903 017 D	generator 75 A		1	
2	E 063 903 213	claw-pole rotor		1	
3	028 903 320 B	parts kit		1	
4	E 021 903 221 B	deep-groove ball bearing		1	
5	E 021 903 221 C	deep-groove ball bearing		1	
6	063 903 291	condenser		1	
7	E 063 903 351	generator		1	
8	063 903 359	diode plate		1	
9	059 903 519	compression spring		2	
10	063 903 537	end plate		1	
11	E 021 903 543 A	retainer plate		1	
12	E 063 903 555	screw with spring washer		3	
13	070 903 803 A	regulator switch		1	
14	N 014 125 1	oval-head screw AM 4 X 18		2	
15	N 012 004 2	lock ring		2	
16	N 010 842 1	pan-head screw M 5 X 58		4	
17	N 012 005 3	lock ring		4	
18	900 025 003 02	washer		4	
19	N 010 710 8	pan-head screw AM 6 X 10		1	
20	N 012 226 5	spring washer		1	
-	E 063 903 791	parts kit terminal B +		1	

- -- E N D -- -

Model	Year	MG	SG	Illustration	Restrictions	Update	11:19	06.04.2005	PORSCHE	PET	PORSCHE
924	79	9	02	902-05		187					

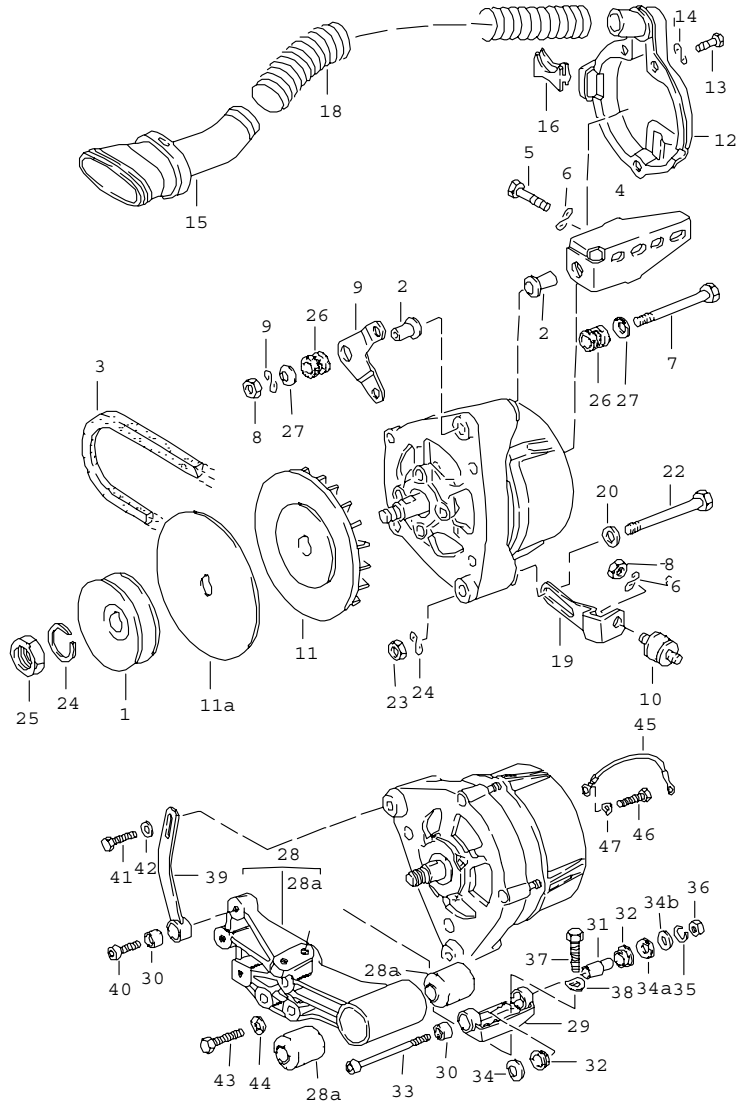

Pos	Part Number	Name	Remarks	Qty	Model
		mounting parts for generator			
1	046 903 119	v-belt pulley 66 $		1	
(1)	035 903 119 C	pulley 61 $		1	
2	059 903 127 A	sleeve		2	924
(2)	047 131 123	sleeve	/RL	1	924
3	E 047 903 137 A	v-belt for v-belt pulley 66 $		1	924
(3)	999 192 200 50	v-belt for v-belt pulley 61 $		1	924
(3)	999 192 154 50	v-belt		1	TURBO
4	046 903 143 A	support		1	924
(4)	047 903 143	support	/RL	1	924
5	N 010 239 11	hexagon-head bolt M 8 X 18		2	924
6	N 012 241 11	spring washer B 8 X 15		4	924
7	N 010 391 4	hexagon-head bolt BM 8 X 95		1	924
8	N 011 008 8	hexagon nut		2	924
9	046 903 145 A	support		1	924
(9)	E 047 903 141	support for XE/XH	/RL	1	924
-	047 903 149 A	rubber mounting	/RL	1	924
10	047 903 149	rubber mounting		1	924
11	063 903 171	fan		1	
11A	047 903 129	damping washer		1	
12	046 903 187 A	protection cap		1	924

Pos	Part Number	Name	Remarks	Qty	Model
13	999 072 005 09	hexagon-head bolt M 6 X 12		3	924
14	N 012 226 5	spring washer		3	924
15	047 903 199	connection piece		1	924
16	046 903 201 A	intermediate piece		1	924
17	E 047 903 211	clamp		1	924
18	477 819 395	hose		1	924
-	N 024 090 1	hose clamp		1	924
19	046 903 255 A	clamp for XF/XH/XK		1	924
(19)	046 903 255 B	clamp for XE/XG/XJ		1	924
20	823 711 815	washer		1	924
21	N 012 229 3	spring washer		1	924
22	N 010 370 5	hexagon-head bolt M 8 X 70		1	924
(22)	N 044 731 1	pan-head screw M 8 X 105	/RL	1	924
23	N 011 008 8	hexagon nut		1	924
24	N 012 016 1	lock ring		1	
25	900 078 005 01	hexagon nut M 14 X 1,5		1	
26	059 903 263 A	bush		2	924
(26)	047 131 117 A	rubber mounting	/RL	2	924
27	059 903 265 A	concave washer		2	924
-	111 971 947 B	cable shoe A 5 X 6		1	
-	111 971 949 B	cable shoe A 5 X 2,5		3	
-	111 971 959	flat receptacle with clips		1	
-	821 971 970	terminal sleeve housing		1	

Pos	Part Number	Name	Remarks	Qty	Model
28	931 101 014 00	bracket		1	TURBO
28A	047 260 905 C	rubber mounting		2	TURBO
29	931 603 113 00	holder		1	TURBO
30	931 603 117 00	rubber mounting		2	TURBO
31	931 603 125 00	sleeve		1	TURBO
32	931 603 119 01	rubber mounting		2	TURBO
33	N 044 774 1	pan-head screw M 8 X 140		1	TURBO
34	931 603 129 00	concave washer		1	TURBO
34A	931 603 129 01	concave washer		1	TURBO
34B	900 025 007 02	washer		1	TURBO
35	900 142 002 01	lock ring		1	TURBO
36	900 076 025 02	hexagon nut		1	TURBO
37	900 075 111 08	hexagon-head bolt M 10 X 30		2	TURBO
38	900 028 032 02	spring washer		2	TURBO
39	931 603 115 00	clamp		1	TURBO
40	900 119 004 02	pan-head screw M 8 X 30		1	TURBO
41	900 075 083 02	hexagon-head bolt M 8 X 25		1	TURBO
42	900 025 007 02	washer		1	TURBO
43	E 900 074 065 02	hexagon-head bolt M 10 X 70		2	TURBO
43A	900 074 063 02	hexagon-head bolt M 10 X 55		2	TURBO
44	900 028 032 02	spring washer		4	TURBO
45	059 971 233 C	ground strap generator		1	
46	N 010 210 13	hexagon-head bolt M 6 X 10		1	
47	N 012 226 5	spring washer		1	
		- -- E N D -- -			

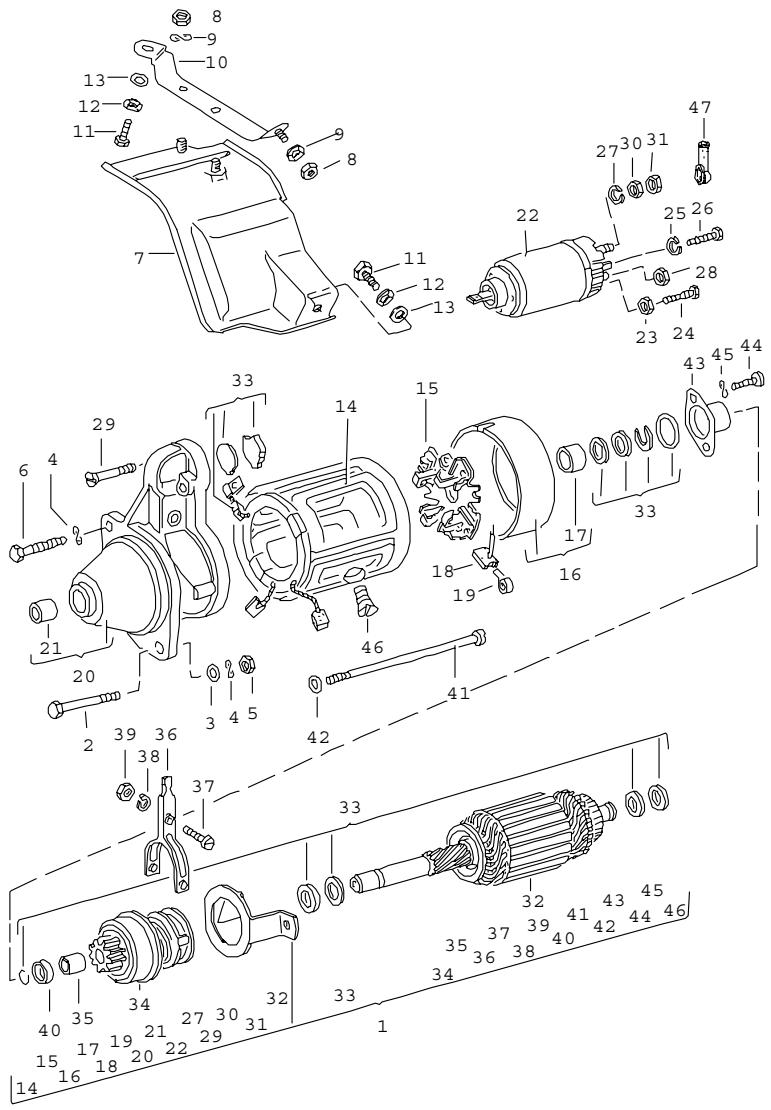

Pos	Part Number	Name	Remarks	Qty	Model
		starter			
1	> 059 911 023 F	starter 0,6 KW (0,8 PS)		1	924
(1)	> 046 911 023	starter 1,1 KW (1,5 PS)		1	924 AUT.
(1)	> 951 604 101 00	starter 1,1 KW (1,5 PS)		1	TURBO
2	E N 010 488 3	hexagon-head bolt M 12 X 85		1	924
2	A 059 911 249 B	screw		1	924
(2)	N 010 491 1	hexagon-head bolt M 12 X 50		1	TURBO
3	N 011 531 7	washer		1	
4	N 012 232 5	spring washer		2	
5	N 011 030 4	hexagon nut		1	
6	N 010 476 3	screw M 12 X 75		1	924
(6)	N 040 253 1	hexagon-head bolt M 12 X 35		1	TURBO
7	047 911 045	cover		1	924
8	900 076 010 02	hexagon nut		3	924
9	N 012 226 5	spring washer		3	924
10	047 911 061	support cover		1	924
11	900 075 087 02	hexagon-head bolt M 8 X 15		2	924
12	N 012 241 11	spring washer		2	924
13	N 011 525 13	washer		2	924
14	E 059 911 115 B	field coil		1	924
15	E 311 911 209 A	retainer plate		1	924
16	E 056 911 211	commutator bracket		1	924
17	E 111 911 213 A	bearing sleeve		1	924
18	E 311 911 215 A	set		1	924
19	E 059 911 219 A	compression spring		1	924

Model	Year	MG	SG	Illustration	Restrictions	Update				
924	79	9	02	902-10		187	11:19	06.04.2005	PORSCHE	PET	PORSCHE

Pos	Part Number	Name	Remarks	Qty	Model
20	E 059 911 255 B	bearing		1	924
21	A 014 301 155	bearing sleeve		1	924
22	059 911 287 B	solenoid switch		1	924
23	N 011 005 14	hexagon nut		1	TURBO
24	900 075 116 02	hexagon-head bolt M 4 X 8		1	924
25	N 012 005 3	lock ring		1	924
(25)	N 012 004 2	lock ring		1	TURBO
26	N 010 225 4	hexagon-head bolt M 5 X 8		1	924
27	900 027 015 02	lock ring		3	924
28	N 011 008 8	hexagon nut		1	924
29	E 052 911 299	screw		3	924
30	N 011 118 14	hexagon nut		1	924
31	N 011 008 8	hexagon nut		1	924
32	E 059 911 311 B	armature		1	924
33	E 028 911 320	parts kit		1	924
34	E 059 911 335	pinion drive		1	924
35	E 059 911 339	shift bush		1	924
36	E 311 911 365	gearshift lever		1	924
37	E 311 911 383	screw		1	924
38	N 012 006 4	lock ring		1	924
39	N 011 116 5	hexagon nut		1	924
40	E 028 911 479	stop ring		1	924
41	E 059 911 491 A	screw		2	924
42	E 059 911 493 A	washer		2	924
43	E 113 911 495	cap		1	924
44	N 014 122 8	oval-head screw M 4 X 8		2	924
45	E N 012 224 1	spring washer		2	924
46	E N 010 999 1	countersunk-head screw M 10 X 13,5		4	924
47	999 659 006 50	protection cap		1	TURBO

- -- E N D -- -

Model	Year	MG	SG	Illustration	Restrictions	Update				
924	79	9	02	902-15		187	11:19	06.04.2005	PORSCHE	PET	PORSCHE

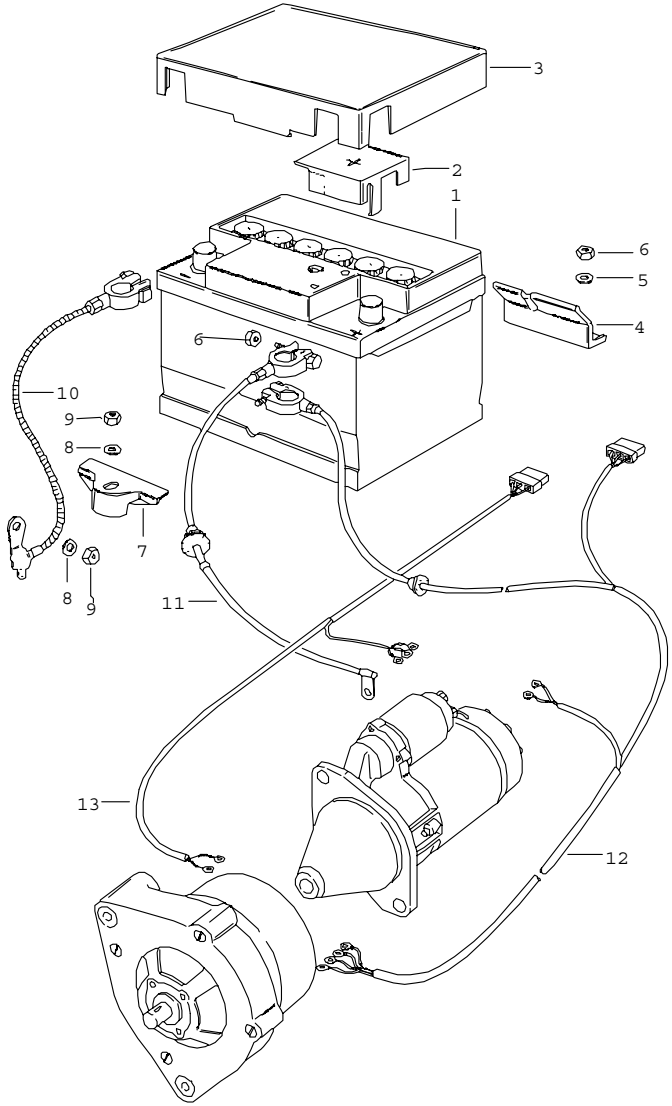

Pos	Part Number	Name	Remarks	Qty	Model
		battery harnesses for starter generator			
1	999 611 053 20	battery 50 AH	/LL	1	
(1)	477 915 105	battery 45 AH	/RL	1	
(1)	477 915 107 A	battery 63 AH	/LL	1	
2	477 915 429	pole covering	/RL	1	
2	477 915 429	pole covering	/RL	1	
3	281 915 411 F	battery cover not for (USA),(CDN)		1	
(3)	477 915 411 A	battery cover for battery 63 AH		1	
4	477 915 315	clip		1	
5	900 151 029 02	washer B 6,4		2	
6	900 076 010 02	hexagon nut M 6		3	
7	914 611 233 10	tension terminal		1	
8	311 827 181	washer		2	
9	N 011 008 8	hexagon nut M 8		2	
10	477 971 221	ground strap		1	
11	E 477 971 224	starter cable	/LL	1	924
(11)	478 971 224	battery-starter cable	/RL	1	924
(11)	478 971 224	battery-starter cable	/RL	1	924
12	E 477 971 223	harness battery starter generator	/LL	1	TURBO

Pos	Part Number	Name	Remarks	Qty	Model	Pos	Part Number	Name	Remarks	Qty	Model
13	E 047 971 224 A	battery-starter cable generator starter		1	924						
(13)	478 971 226	harness generator starter	/RL	1	924						
		- -- E N D -- -									

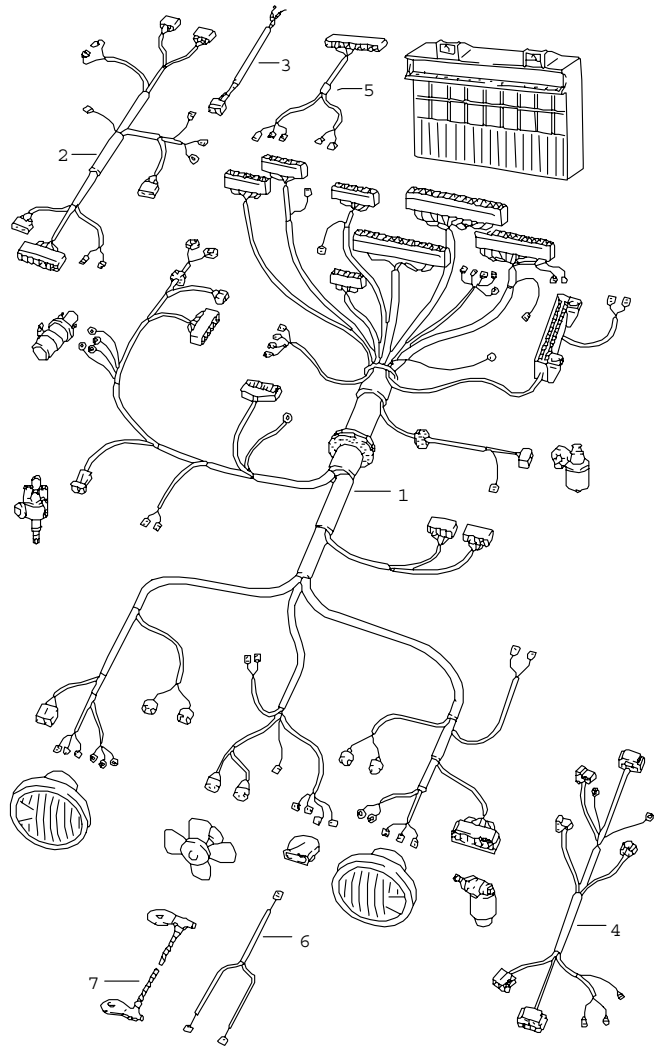

Pos	Part Number	Name	Remarks	Qty	Model
		harnesses engine compartment			
(1)	477 971 071 A	wiring harness engine compartment F >>92461 05149	/LL	1	
(1)	E 477 971 071 D	wiring harness engine compartment F 92471 00001>> F >>92481 01086	/LL	1	
(1)	477 971 071 DA	wiring harness engine compartment F 92481 01087>> F >>92481 09474	/LL	1	
(1)	477 971 071 DB	wiring harness engine compartment	/LL 79-	1	924
(1)	E 477 971 071 K	wiring harness engine compartment	/LL 79-	1	924,M 573
(1)	E 477 971 071 G	wiring harness engine compartment	/LL 79-	1	TURBO
1	E 477 971 071 N	wiring harness engine compartment	/LL 79-	1	TURBO,M 573
(1)	E 478 971 071	wiring harness engine compartment F >>92481 01086	/RL	1	
(1)	E 478 971 071 A	wiring harness engine compartment F 92481 01087>> F >>92481 09474	/RL	1	
(1)	E 478 971 071 AA	wiring harness engine compartment	/RL 79-	1	924
(1)	E 478 971 071 C	wiring harness engine compartment	/RL 79-	1	924,M 573
(2)	477 971 761 A	wiring harness k-jetronic F >>92461 05149		1	
(2)	477 971 761 A	wiring harness k-jetronic F >>92461 05149		1	924,M 414
(2)	477 971 761 B	wiring harness k-jetronic F 92471 00001>> F >>92481 09474		1	

Pos	Part Number	Name	Remarks	Qty	Model
(2)	E 477 971 761 BA	wiring harness k-jetronic	79-	1	924
2	477 971 761 F	wiring harness k-jetronic	79-	1	TURBO
3	477 971 469 A	harness TSZ ignition control unit	79-	1	TURBO
(4)	E 477 971 561	harness air conditioner F >>92471 05386	/LL	1	
(4)	477 971 561 A	harness air conditioner F 92471 05387>>	/LL -78	1	
4	E 477 971 563	wiring harness air conditioner	/LL 79-	1	
(4)	E 478 971 561	wiring harness air conditioner	/RL -78	1	
(4)	478 971 561 A	wiring harness air conditioner	/RL 79-	1	924
		headlight washer system			
5	* 477 971 205	wiring harness		1	
6	E 477 971 322	double line		1	
(6)	* 477 971 322 A	double line	79-	1	
7	477 971 235	ground strap engine body		1	

- -- E N D -- -

Pos	Part Number	Name	Remarks	Qty	Model

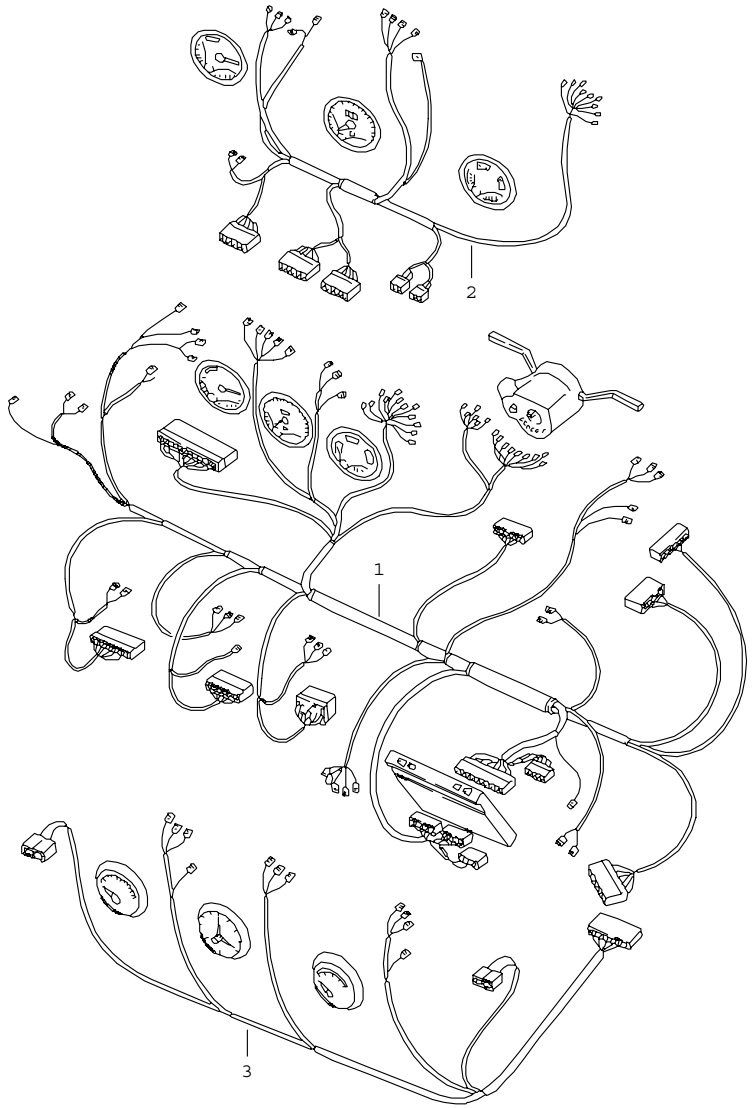

Pos	Part Number	Name	Remarks	Qty	Model
		harnesses			
(1)	E 477 971 050	wiring harness dashboard not for (USA),(CDN) F >>92461 05149	/LL	1	
(1)	E 477 971 050 D	wiring harness dashboard not for (USA),(CDN) F 92471 00001>>>>92481 00746	/LL	1	
(1)	E 477 971 050 DA	wiring harness dashboard not for (USA),(CDN) F 92481 00747>>>>92481 09474	/LL	1	
1	477 971 050 DB	wiring harness dashboard not for (USA),(CDN)	/LL 79-	1	
(1)	478 971 050	wiring harness dashboard F >>92481 00746	/RL	1	
(1)	E 478 971 050 B	wiring harness dashboard F 92481 00747>>>>92481 09474	/RL	1	
(1)	E 478 971 050 BA	wiring harness dashboard	/RL 79-	1	924
(1)	E 477 971 050 F	wiring harness dashboard not for (USA),(CDN) F >>92481 00746	/LL	1	AUT.
(1)	477 971 050 FA	wiring harness dashboard F 92481 00747>>>>92481 09474	/LL	1	AUT.
(1)	E 477 971 050 FB	wiring harness dashboard not for (USA),(CDN)	/LL 79-	1	AUT.
(1)	478 971 050 A	wiring harness dashboard F >>92481 00746	/RL	1	AUT.

Pos	Part Number	Name	Remarks	Qty	Model
(1)	E 478 971 050 C	wiring harness dashboard F 92481 00747>> F >>92481 09474	/RL	1	AUT.
(1)	E 478 971 050 CA	wiring harness dashboard	/RL 79-	1	AUT.
2	477 971 051	wiring harness instruments	-78	1	
(3)	477 971 196 B	wiring harness instruments centre console		1	M 414
(3)	E 477 971 196 C	wiring harness centre console		1	M 573
3	477 971 196 D	harness centre console oil pressure indicator voltmeter		1	
		- -- E N D -- -			

Pos	Part Number	Name	Remarks	Qty	Model

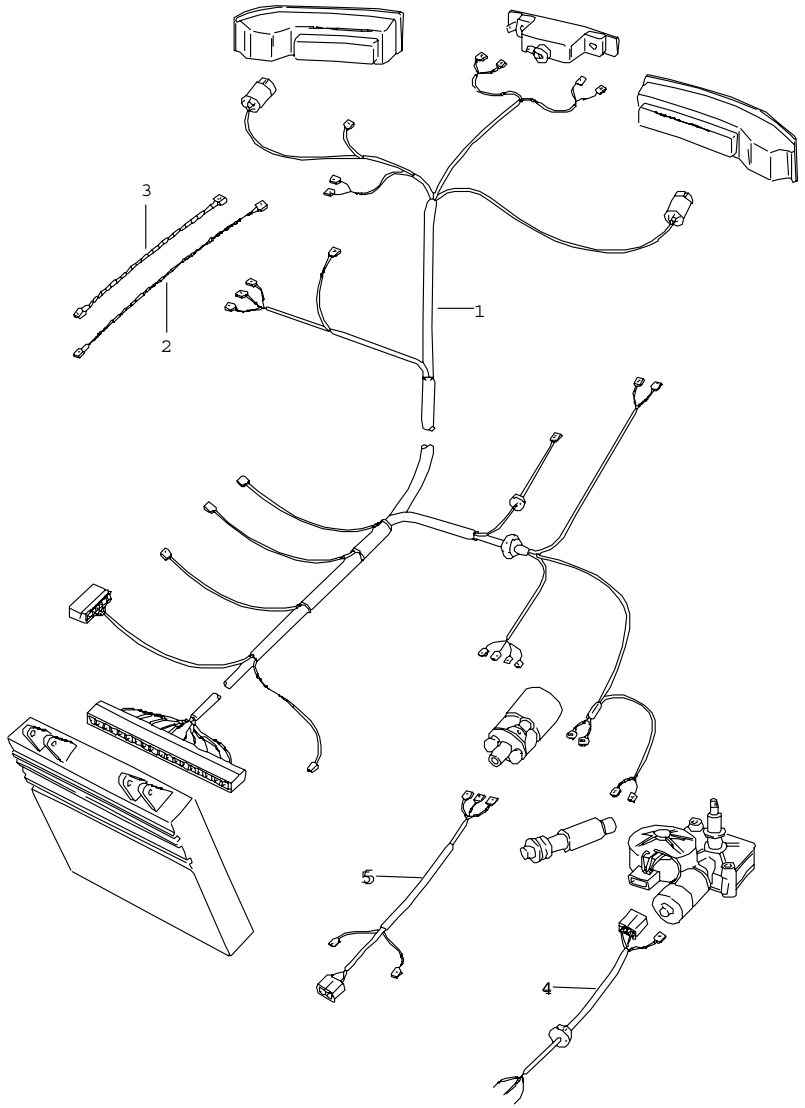

Pos	Part Number	Name	Remarks	Qty	Model
		harnesses rear end			
(1)	E 477 971 011 B	wiring harness rear end F >>92471 00713		1	
(1)	E 477 971 011 B	wiring harness rear end F 92471 00714>>	-10.78	1	
1	477 971 011 BA	wiring harness rear end	11.78-	1	
(1)	E 477 971 011 CA	wiring harness rear end	11.78-	1	AUT.
2	477 971 257 B	line gas-filled strut		2	
3	477 971 263 B	ground strap gas-filled strut		2	
4	477 971 345	harness for rear window wiper		1	
5	477 971 346	wiring harness rocker switch rear window wiper		1	
		- -- E N D -- -			

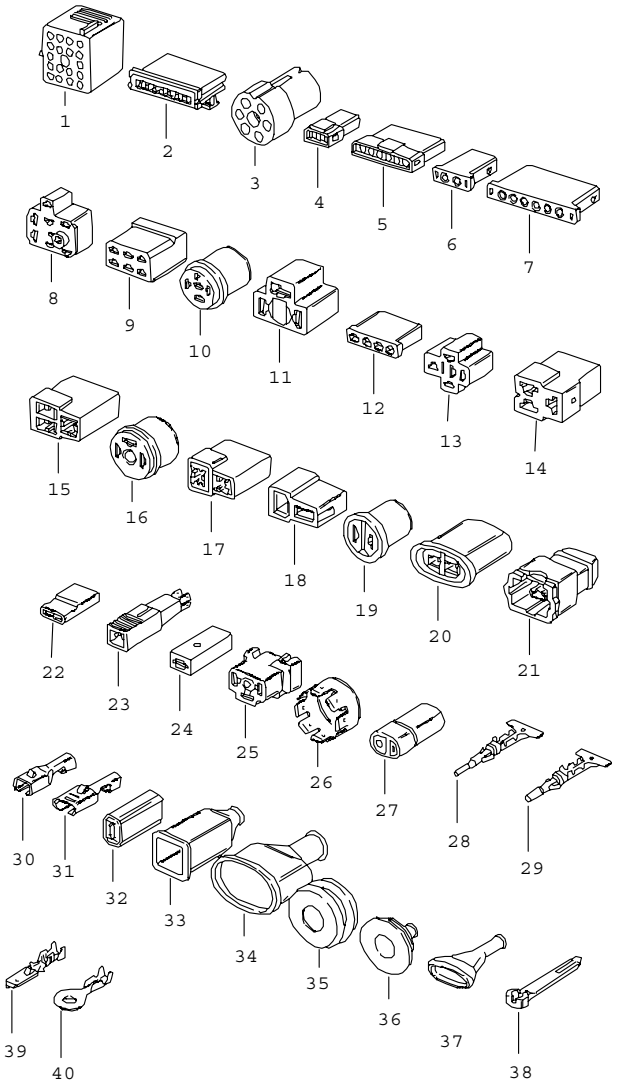

Pos	Part Number	Name	Remarks	Qty	Model
		push-on connector			
1	171 971 971	connector housing yellow 20-pole		1	
(1)	171 971 971 A	connector housing black 22-pole		1	
(1)	171 971 971 B	connector housing blue 22-pole		1	
(1)	171 971 971 C	connector housing clear 19-pole		1	
(1)	171 971 971 D	connector housing red 20-pole		1	
(1)	171 971 971 E	connector housing white mat		1	
2	113 971 998 B	connector housing 8-pole		X	
3	803 971 979	plug socket 7-pole		1	
(4)	171 971 998	connector housing single pole		X	
4	171 971 998 A	connector housing 2-pole		X	
(4)	171 971 998 C	connector housing 4-pole		1	
5	171 971 998 E	connector housing 6-pole		X	
(6)	171 971 999	terminal sleeve housing single pole		X	
6	171 971 999 A	terminal sleeve housing 2-pole		X	
7	171 971 999 E	connector housing 6-pole		X	
8	321 971 999 A	terminal sleeve housing light switch	-78	1	
(8)	477 971 999	terminal sleeve housing light switch	79-	1	

Pos	Part Number	Name	Remarks	Qty	Model
9	803 971 831	terminal sleeve housing 6-pole		1	
11	914 612 327 10	terminal sleeve housing 3-pole		X	
13	803 971 835 A	terminal sleeve housing 3-pole		1	
14	821 971 970	terminal sleeve housing 3-pole		1	
15	821 971 975	terminal sleeve housing 3-pole		1	
16	113 945 525	terminal sleeve housing 3-pole		6	
17	815 971 988 A	terminal sleeve housing 2-pole		X	
18	815 971 989 A	connector housing		X	
19	810 971 993	terminal sleeve housing		X	
20	810 971 989	connector housing		X	
21	022 906 231 A	connector housing		X	
22	825 971 990	terminal sleeve housing single pole		X	
24	111 971 977	plug with guide		X	
26	171 971 519 A	ground connector		1	
27	914 612 417 10	fuse holder		1	
28	N 017 589 4	round connector with clips 1,6 X 1		X	
(28)	N 017 586 2	round connector with clips 2,1 X 1		X	
29	N 017 597 2	cylindrical connector with clips 1,6 X 1		X	
(29)	N 017 592 2	cylindrical connector with clips 1,6 X 2,5		X	
30	111 971 958	flat receptacle with clips 2,8 X 0,8		X	
(30)	111 971 958	flat receptacle with clips 2,8 X 1		X	
(30)	111 971 958	flat receptacle with clips 2,8 X 1		X	
(30)	N 017 243 1	flat receptacle with clips 2,8 X 1,5		X	
31	111 971 959	flat receptacle with clips 6,3 X 0,8		X	
(31)	111 971 959	flat receptacle with clips 6,3 X 1		X	
(31)	999 652 106 02	flat receptacle with clips 6,3 X 1		X	
(31)	N 017 491 8	flat receptacle with clips 6,3 X 2,5		X	
(31)	N 017 491 8	flat receptacle with clips 6,3 X 2,5		X	
32	111 971 921	protection cap for flat connector		X	
33	803 957 855 B	protective grommet for connector housing		1	
34	431 971 866	protective grommet for terminal sleeve housing		1	

Pos	Part Number	Name	Remarks	Qty	Model	Pos	Part Number	Name	Remarks	Qty	Model
(35)	477 971 871	protective grommet harness engine compartment		X							
35	477 971 871 B	rubber sleeve harness engine compartment		X							
36	477 971 911	protective grommet harness starter battery		1							
37	022 906 102	protection cap		1							
38	477 971 850 A	tie-wrap for starter cable		2							
39	E 111 971 985	flat plug with clips 6,3 X 1		X							
(39)	N 017 457 2	flat plug with clips 2,8 X 1		X							
(39)	111 971 986	flat plug with clips 6,3 X 2,5		X							
40	N 017 518 2	cable shoe		X							
(40)	N 017 516 2	cable shoe		X							
(40)	N 017 515 4	cable shoe		X							
(40)	N 017 505 4	cable shoe		X							
		- -- E N D -- -									

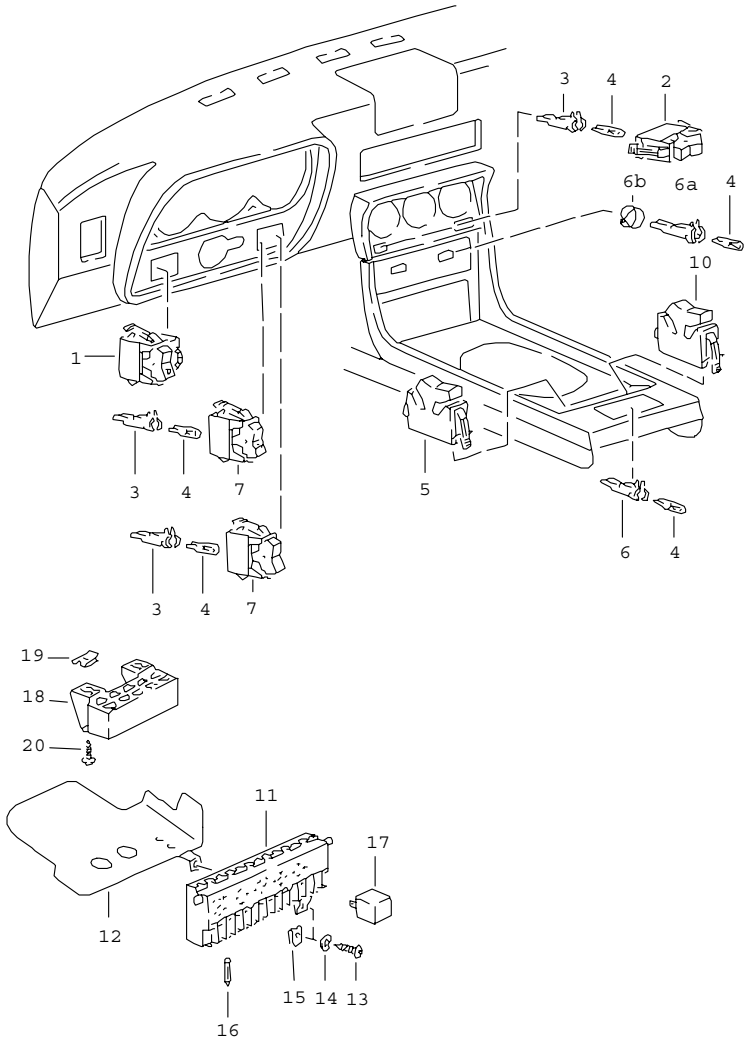

Pos	Part Number	Name	Remarks	Qty	Model
		switch fuse box relay			
1	321 941 531 A	rocker switch for light	/LL -78	1	
(1)	321 941 531 B	rocker switch for light	/RL -78	1	
1	477 941 531 B	light switch not for (USA),(CDN)	79-	1	
(1)	477 941 531 F	light switch not for (USA),(CDN)	79-	1	
2	477 953 235 A	emergency light switch		1	
3	E 141 957 397 A	bulb holder		X	
4	900 631 132 90	bulb W 12 V, 1,2 W		X	
5	477 941 563 A	switch additional headlamp		1	
(5)	911 613 113 00	changeover switch		X	
6	999 632 017 02	bulb holder		1	
6A	914 631 179 10	bulb holder		2	
6B	477 919 333	knob holder bulb holder blower switch		2	
7	477 941 535	switch rear fog light		1	
9	133 959 621	switch rear window heating		1	
10	477 955 701	rocker switch rear window wiper		1	
(10)	477 955 702	switch headlight washer system		1	
11	477 941 813	relay plate with fuse holder		1	
12	E 477 941 802	cover	/LL	1	
(12)	478 941 802	cover	/RL	1	

Pos	Part Number	Name	Remarks	Qty	Model
13	900 143 072 02	oval-head sheetmetal screw B 3,5 X 19		1	
14	N 011 663 1	washer		1	
15	N 015 438 1	speed nut B 3,5 X 16,5		1	
16	N 017 121 1	safety fuse 8 A		X	
(16)	N 017 121 4	safety fuse 16 A		X	
(16)	N 017 121 5	safety fuse 25 A		1	M 573
-	111 937 091 A	terminal with fuse		1	M 573
-	E 171 937 091	fuse holder		X	
(17)	111 943 383 C	relay electric motor pop-up headlight		1	
-	477 971 923	protection cap for relay pop-up headlight		1	
17	E 411 941 583 B	relay low/high beam		1	
(17)	477 906 059	relay fuel pump	-78	1	
(17)	433 906 059	relay fuel pump	79-	1	
(17)	477 951 253	relay electric fan	-78	1	
(17)	477 951 253 A	relay rear window heating	-78	1	
(17)	111 953 227 D	flasher relay		1	
(17)	477 955 531 A	interval relay		1	
(17)	853 959 821	relay additional headlamp		1	
(17)	431 951 253 H	relay additional headlamp	-78	1	
-	135 937 501 A	terminal sleeve housing		X	
(17)	E 477 963 135	relay air conditioner	-78	1	
(17)	477 963 137	relay motor fan	-78	1	
(17)	477 959 143	relay motor fan air conditioner	79-	2	
(17)	141 951 253 B	relay fan additional headlamp rear window heating F >>92481 09474		3	
		use also:			
-	E 477 971 207	wiring harness		1	
(17)	141 951 253 B	relay horn		1	
18	477 937 511	fuse holder 9-POLIG	79-	1	
19	E N 045 421 1	tapping screw		2	
20	N 013 964 4	tapping screw B 4,2 X 16		2	
		- -- E N D -- -			

Model	Year	MG	SG	Illustration	Restrictions	Update	11:21	06.04.2005	PORSCHE PET PORSCHE
924	79	9	03	903-05		187			

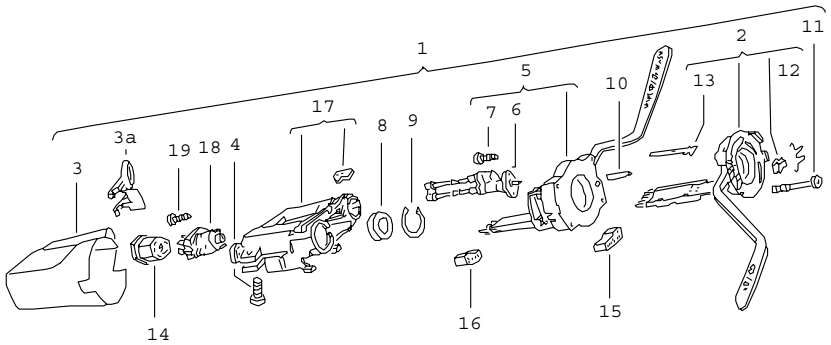

Pos	Part Number	Name	Remarks	Qty	Model
		steering column switch			
1	113 953 503 BG	steering column switch not for (USA),(CDN)	-78	1	
(1)	E 477 953 503 B	steering column switch not for (USA),(CDN)	79-	1	
2	111 953 513 F	direction indicator switch upper part		1	
3	113 953 515	lining		1	
3A	477 953 517	cover		1	
4	N 014 707 4	pan-head screw M 8 X 15		1	
5	111 953 519 G	switch windscreen wiper system windscreen washer system		1	
8	911 347 771 02	ball bearing		1	
9	111 953 563 A	circlip ball bearing		1	
10	111 953 572 A	spacer sleeve		4	
11	111 953 573 A	pan-head screw		4	
12	111 953 575	spring		1	
13	111 971 983	flat plug		X	
14	111 953 631	terminal sleeve housing ignition starter switch		1	
15	111 953 633	terminal sleeve housing direction indicator switch		1	
16	111 953 635 A	terminal sleeve housing wiper switch		1	
17	113 905 851 A	steering lock without ignition starter switch		1	
18	111 905 865 L	ignition starter switch		1	
19	E N 010 802 2	oval-head screw AM 3 X 6		1	
		- -- E N D -- -			

Model	Year	MG	SG	Illustration	Restrictions	Update			
924	79	9	03	903-10		187	11:21	06.04.2005	PORSCHE PET PORSCHE

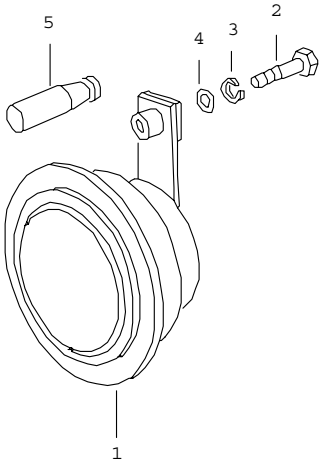

Pos	Part Number	Name	Remarks	Qty	Model
		horn	-78		
1	191 951 113 A	horn low-pitched	/L	1	
(1)	944 637 103 01	horn high-pitched	/R	1	
2	N 010 239 11	hexagon-head bolt M 8 X 18		2	
3	900 027 015 02	lock ring		2	
4	E N 011 696 1	washer		2	
5	E 111 951 195 A	rubber sleeve		2	
		- -- E N D -- -			

Model	Year	MG	SG	Illustration	Restrictions	Update				
924	79	9	03	903-15		187	11:21	06.04.2005	PORSCHE	PET	PORSCHE

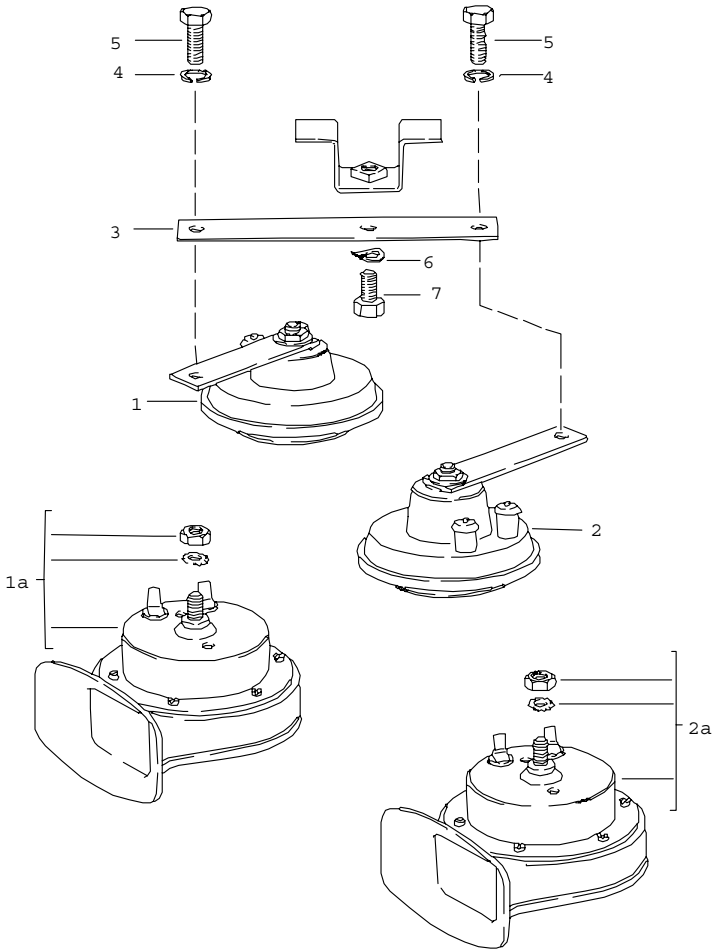

Pos	Part Number	Name	Remarks	Qty	Model
		horn			79
1	191 951 113 A	horn low-pitched		1	924
1A	928 635 222 00	fanfare low-pitched		1	TURBO
2	944 637 103 01	horn high-pitched		1	924
2A	928 635 221 00	fanfare high-pitched		1	TURBO
3	171 951 199 B	support		1	924
(3)	810 951 229	spring clip		1	TURBO
4	900 027 015 02	lock ring		2	924
5	N 010 239 11	hexagon-head bolt M 8 X 18		2	924
6	N 012 228 3	spring washer		1	
7	900 075 087 02	hexagon-head bolt M 8 X 15		1	
		- -- E N D -- -			

Model	Year	MG	SG	Illustration	Restrictions	Update	11:22	06.04.2005	PORSCHE PET PORSCHE
924	79	9	04	904-00		187			

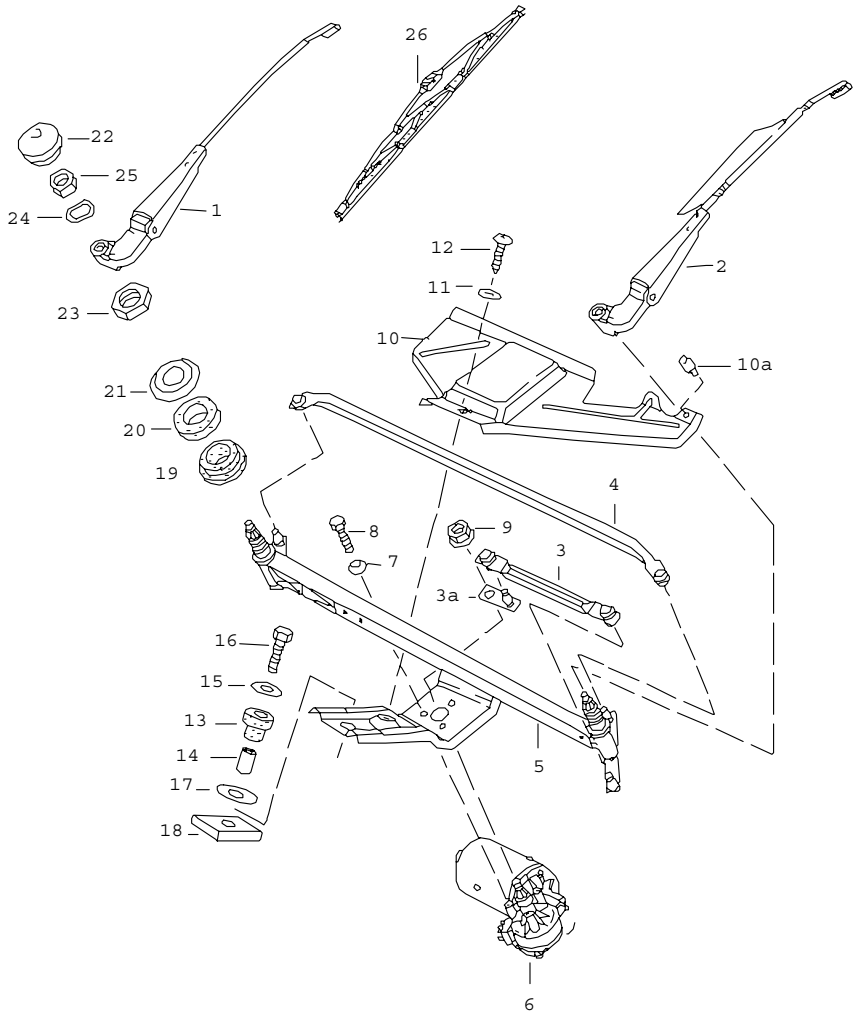

Pos	Part Number	Name	Remarks	Qty	Model
		windscreen wiper system			
1	477 955 028	wiper arm passenger's side		1	
1	477 955 028	wiper arm driver's side	/RL	1	
(2)	477 955 027	wiper arm with spoiler driver's side not for (USA),(CDN)	/LL	1	
3	477 955 035 B	connecting rod short		1	
3A	477 955 039 A	crank		1	
4	477 955 036 B	connecting rod long		1	
5	477 955 041 B	frame		1	
6	477 955 113 B	windscreen wiper motor		1	
7	N 012 105 3	serrated lock washer		3	
8	999 072 005 09	hexagon-head bolt M 6 X 12		3	
9	E 999 084 045 02	lock nut		1	
10	477 955 123	cover	/LL	1	
(10)	478 955 123	cover	/RL	1	
10A	E 803 827 589 A	buffer		1	
11	900 151 028 02	washer		1	
12	N 013 957 5	tapping screw BZ 3,5 X 9,5		1	
13	477 955 127	rubber bush		1	
14	477 955 128	spacer sleeve		1	
15	900 151 029 02	washer		1	
16	N 010 217 9	hexagon-head bolt M 6 X 20		1	
17	281 711 135	washer 12,2 X 28 X 2		1	
18	477 955 129	desk pad		1	

Pos	Part Number	Name	Remarks	Qty	Model	Pos	Part Number	Name	Remarks	Qty	Model
19	901 628 924 00	rubber bush		2							
20	901 628 923 01	rubber bush		2							
21	911 628 963 00	washer		2							
22	477 955 205	cap		2							
23	481 955 243 A	hexagon nut		2							
24	803 955 437	washer		2							
25	N 011 008 8	hexagon nut		2							
26	477 955 425 B	windscreen wiper blade		2							
(26)	478 955 425	wiper blade for wiper arm 477.955.028 477.955.027		2							
		- -- E N D -- -									

Model	Year	MG	SG	Illustration	Restrictions	Update				
924	79	9	04	904-05		187	11:22	06.04.2005	PORSCHE	PET	PORSCHE

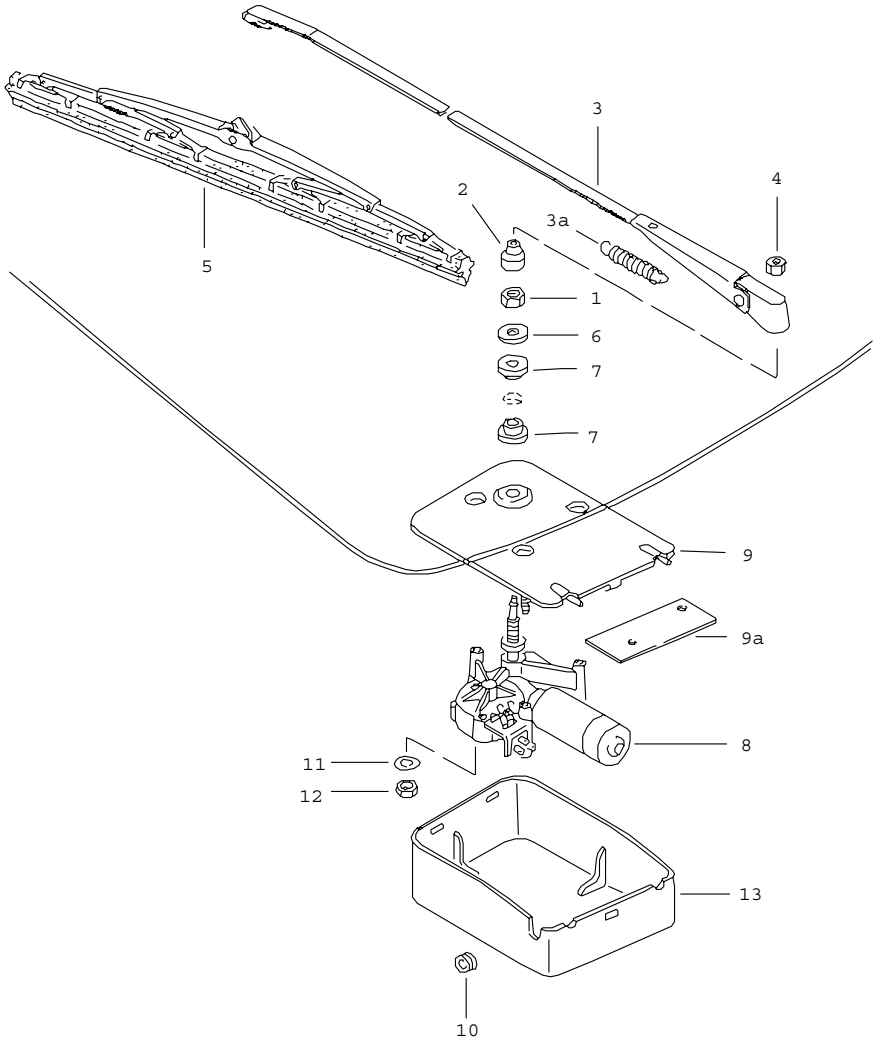

Pos	Part Number	Name	Remarks	Qty	Model
		rear window wiper			M 425
1	311 955 243 A	hexagon nut M 12 X 1		1	
2	211 955 275 A	cap		1	
3	477 955 409 A	wiper arm		1	
3A E	477 955 411	spring		1	
4 E	999 084 045 02	lock nut		1	
(5)	928 628 218 01	wiper blade		1	
6	477 955 435 A	washer		1	
7	477 955 439	grommet		2	
8	477 955 713 A	wiper motor together with rear lid MOD.88- use also:		1	
-	944 628 071 02	plate		1	
	03C	black			
-	445 955 753	bush		1	
-	533 955 758	grommet		1	
-	944 628 103 00	bush		1	
-	N 014 133 8	oval-head screw M 5 X 12		2	
-	N 011 524 7	washer A 6,4		4	
-	999 209 017 02	spacer sleeve		2	
-	999 702 180 40	rubber sleeve		2	
9	477 955 715 B	plate		1	
9A E	477 955 719	intermediate plate	-78	1	
10	111 941 189	drain bush		1	
11	N 012 226 5	spring washer B 6		3	
12	900 076 010 02	hexagon nut M 6		3	
13	477 955 737	cap		1	

Model	Year	MG	SG	Illustration	Restrictions	Update			
924	79	9	04	904-05		187	11:22	06.04.2005	PORSCHE PET PORSCHE

Pos	Part Number	Name	Remarks	Qty	Model	Pos	Part Number	Name	Remarks	Qty	Model
-	311 949 149 B	grommet for wiring harness		1 1							
-	171 971 999 A	terminal sleeve housing		1							
		- -- E N D -- -									

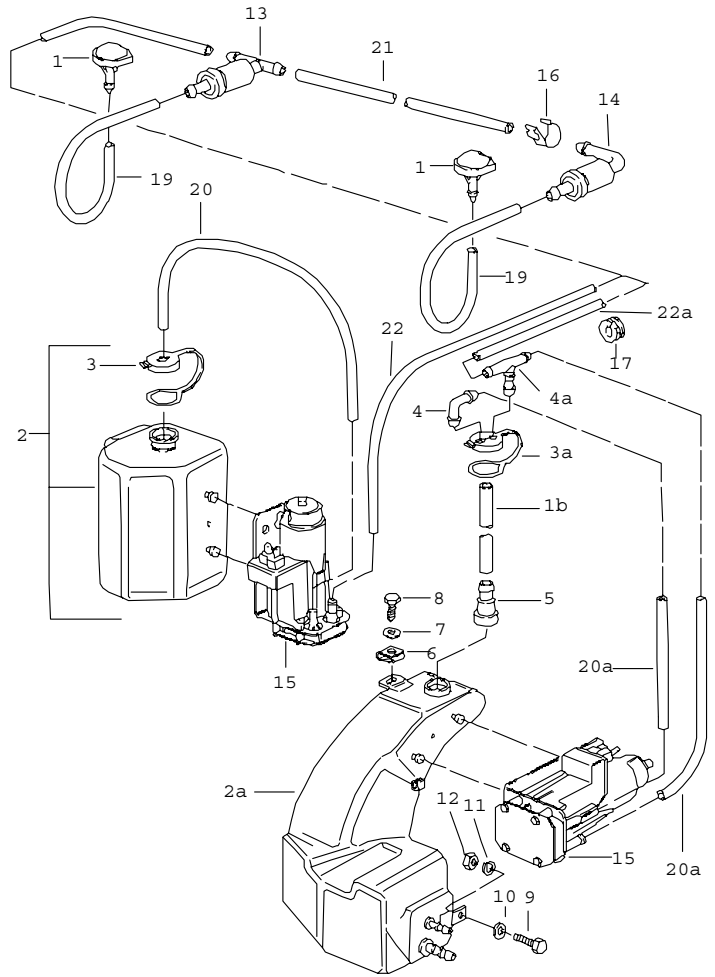

Pos	Part Number	Name	Remarks	Qty	Model
		windscreen washer system	-78		
1	914 628 203 11	nozzle		2	
2	823 955 451	fluid tank F >>92481 00776		1	
2A	477 955 451 A	fluid tank F 92481 00777>>		1	
3	477 955 455	cover F >>92481 00776		1	
3A	477 955 455	cover		1	
4	477 955 456	connection piece		1	
4A	477 955 459	t-socket		1	
5	911 628 749 00	t-piece		1	
6	* 477 955 461	speed nut 6,3 X 22		1	
7	* 900 151 029 02	washer		1	
8	* N 013 891 1	tapping screw B 6,3 X 19		1	
9	* 900 075 083 02	hexagon-head bolt M 8 X 25		2	
10	* 900 151 008 02	washer		2	
11	* 900 027 015 02	lock ring		2	
12	* N 011 008 8	hexagon nut		2	
13	914 628 433 00	valve		1	
14	477 955 481	valve		1	
15	823 955 651	pump		1	
16	477 971 939	cable terminal		4	
17	E 131 611 751	grommet		1	
-	N 020 301 1	hose		*	
18	-	460 MM F 92481 00777>>		1	
19	-	110 MM		2	
20	-	400 MM F >>92481 00776		1	

Pos	Part Number	Name	Remarks	Qty	Model	Pos	Part Number	Name	Remarks	Qty	Model
20A	-	170 MM F 92481 00777>>		2							
21	-	460 MM		1							
22	-	1900 MM F >>92481 00776		1							
22A	-	1450 MM F 92481 00777>>		1							
		- -- E N D -- -									

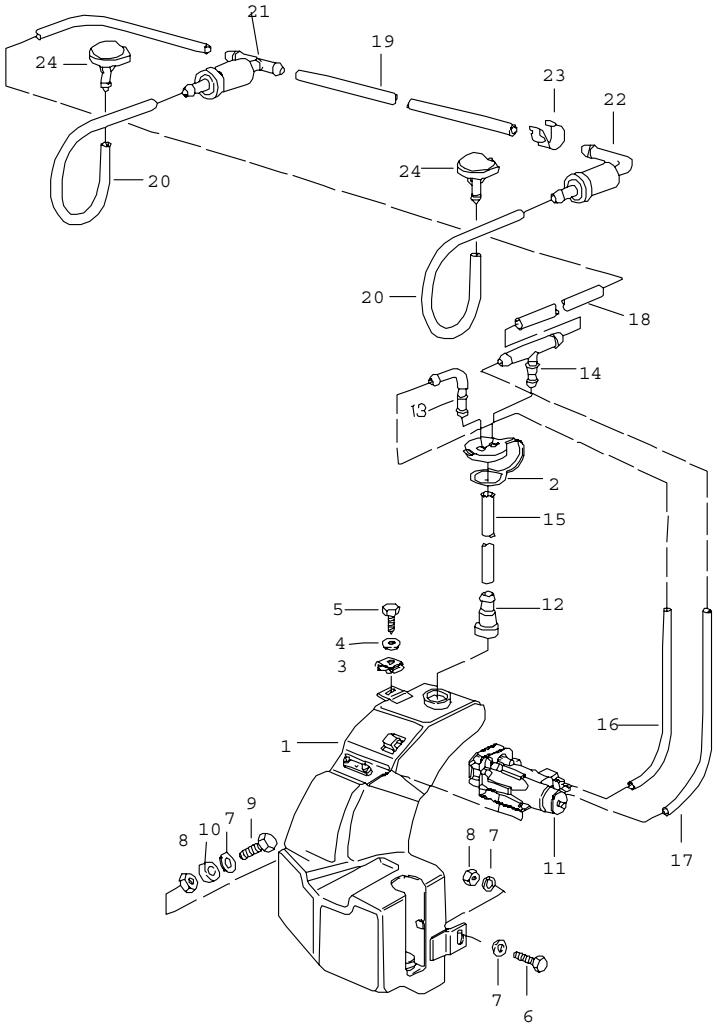

Pos	Part Number	Name	Remarks	Qty	Model
		windscreen washer system	79		
1	477 955 451 D	water reservoir F 92491 04146>> F 92494 00051>>		1	
(1)	477 955 451 A	fluid tank F >>92491 04145		1	
2	477 955 455	cover		1	
3	477 955 461	speed nut 6,3 X 22		1	
4	900 151 029 02	washer		1	
5	N 013 891 1	tapping screw B 6,3 X 19		1	
6	N 010 218 6	hexagon-head bolt M 6 X 25		1	
7	N 011 612 3	washer		4	
8	900 076 010 02	hexagon nut		2	
9	N 010 220 3	hexagon-head bolt M 6 X 30		1	
10	052 109 135	spacer sleeve		1	
11	823 955 651	pump		1	
12	911 628 749 00	t-piece		1	
13	477 955 456	connection piece		1	
14	477 955 459	t-socket		1	
-	N 020 301 1	hose		*	
15	-	500 MM		2	
16	-	260 MM		1	
17	-	280 MM		1	
18	-	1640 MM		1	
19	-	390 MM		1	
20	-	160 MM		2	
21	914 628 433 00	valve		1	
22	477 955 481	valve		1	
23	477 971 939	cable terminal		4	

Pos	Part Number	Name	Remarks	Qty	Model	Pos	Part Number	Name	Remarks	Qty	Model
24	914 628 203 11	nozzle		2							
		- -- E N D -- -									

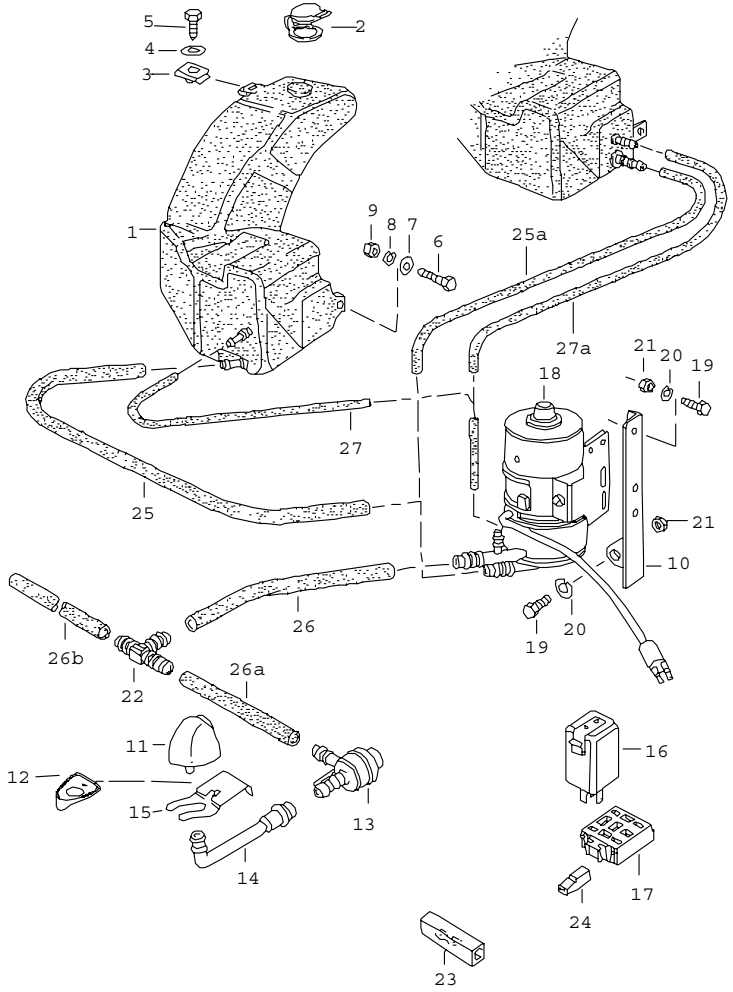

Pos	Part Number	Name	Remarks	Qty	Model
		headlight washer system	-78		M 288
1	* 477 955 451 A	fluid tank		1	
2	* 911 628 167 00	cover		1	
3	* 477 955 461	speed nut 6,3 X 22		1	
4	* 900 151 029 02	washer		1	
5	* N 013 891 1	tapping screw B 6,3 X 19		1	
6	* 900 075 083 02	hexagon-head bolt M 8 X 25		2	
7	* 900 151 008 02	washer		2	
8	* 900 027 015 02	lock ring		2	
9	* N 011 008 8	hexagon nut		2	
10	* 477 955 661	support for pump POS. 1 - 10 F >>92481 00776		1	
11	* 477 955 179	spray nozzle		2	
13	E 113 955 187	nozzle		2	
14	* 477 955 194	connecting piece not for (USA),(CDN)		2	
15	* 477 955 195 B	retainer spring		2	
16	* 113 955 200	relay		1	
17	* 135 937 501 A	terminal sleeve housing		1	
18	* 477 955 679 A	pump		1	
19	E 900 014 004 02	pan-head screw M 5 X 15		3	
20	* N 012 005 3	lock ring		3	
(20)	* N 011 692 3	washer		2	
21	* N 011 005 14	hexagon nut		3	
22	* 113 955 975 B	t-piece		1	
23	* 111 937 077 E	line distributor		1	

Pos	Part Number	Name	Remarks	Qty	Model	Pos	Part Number	Name	Remarks	Qty	Model
24	* 825 971 990	terminal sleeve housing		1							
-	E N 020 340 1	hose		*							
25	-	450 MM F >>92481 00776		1							
-	999 181 806 40	hose 10 X 3		X							
25A	-	140 MM F 92481 00777>>		1							
-	* N 020 126 1	pipe 12,5 X 1,25		*							
26	-	480 MM		1							
26A	-	890 MM		1							
26B	-	100 MM		1							
-	* N 020 301 1	hose		*							
27	-	400 MM F >>92481 00776		1							
27A	-	170 MM F 92481 00777>>		1							
-	* 477 809 035	support for container F >>92481 00776		1							
-	E 477 955 997	installation set headlight washer system for subsequent installat.		1							
		- -- E N D -- -									

Model	Year	MG	SG	Illustration	Restrictions	Update				
924	79	9	04	904-25		187	11:23	06.04.2005	PORSCHE	PET	PORSCHE

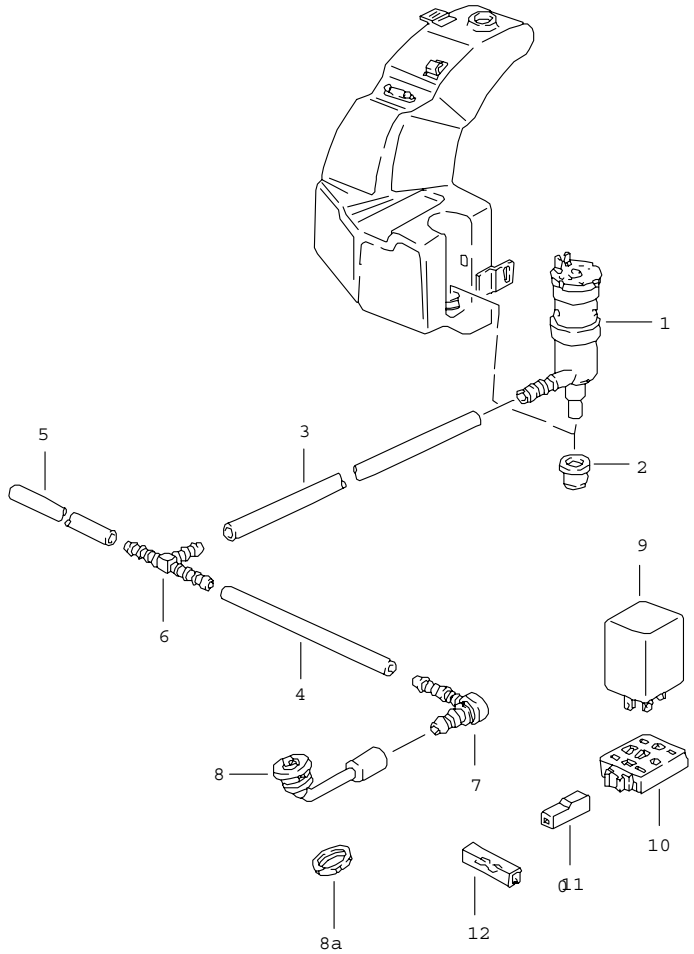

Pos	Part Number	Name	Remarks	Qty	Model
		headlight washer system	79-		M 288
1	191 955 681	pump		1	
2	431 955 465 A	gasket		1	
-	N 020 126 1	pipe		*	
3	-	410 MM		1	
4	-	890 MM		1	
5	-	100 MM		1	
6	113 955 975 B	t-piece		1	
7	477 955 183	pressure control valve		2	
8	477 955 177	jet carrier		2	
8A	N 019 121 1	nut		2	
9	928 618 111 00	relay		1	
10	135 937 501 A	terminal sleeve housing		1	
11	825 971 990	terminal sleeve housing		1	
12	111 937 077 E	line distributor		1	
		- -- E N D -- -			

Model	Year	MG	SG	Illustration	Restrictions	Update				
924	79	9	05	905-00		187	11:23	06.04.2005	PORSCHE	PET	PORSCHE

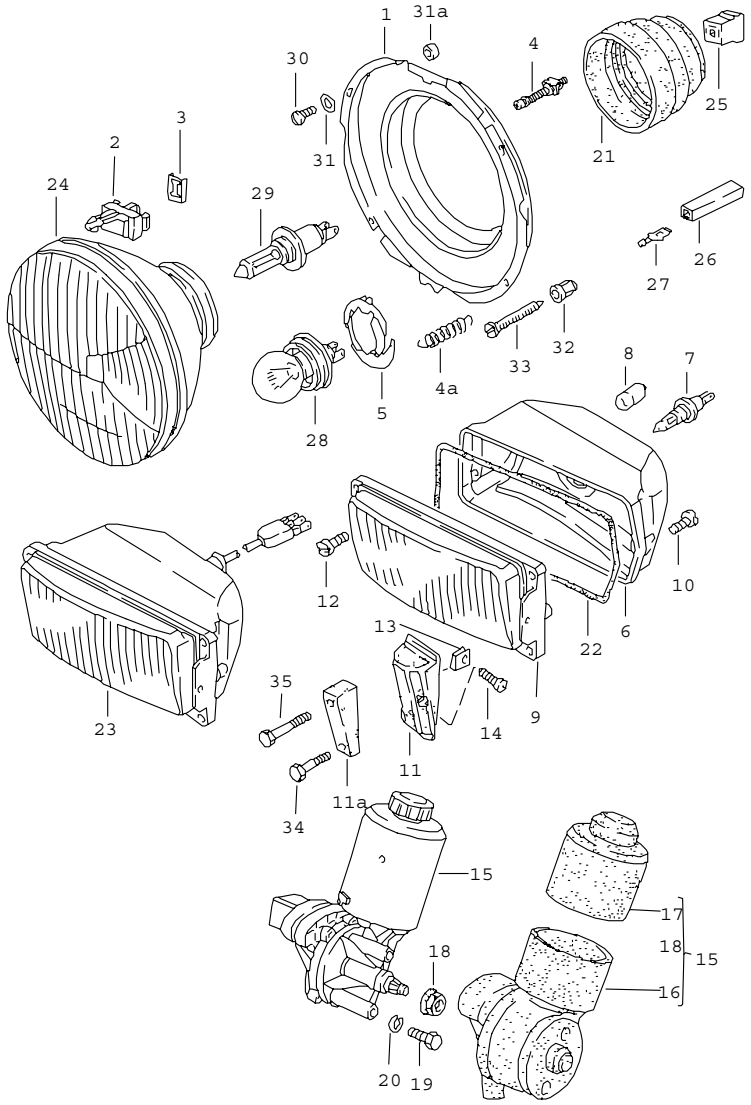

Pos	Part Number	Name	Remarks	Qty	Model
		headlamp electric motor pop-up headlight			
1	477 941 046	retaining frame		2	
2	321 941 133	articulated piece		2	
3	321 941 135	tab washer articulated piece		2	
4	113 941 141	adjusting screw		4	
4A	321 941 157	tension spring		2	
6	E 477 941 311	reflector	/L	1	
(6)	477 941 311 A	reflector	/R	1	
7	900 631 126 90	halogen bulb YC 12 V 55 W		2	
8	900 631 103 90	bulb		2	
9	944 631 407 00	additional headlamp with retaining frame	/L	1	
(9)	944 631 409 00	additional headlamp yellow with retaining frame	/L	1	(F)
(9)	944 631 408 00	additional headlamp with retaining frame	/R	1	
(9)	E 944 631 410 00	additional headlamp yellow with retaining frame	/R	1	(F)
10	N 014 122 8	oval-head screw		6	
11	477 807 153	buffer	/L	1	
(11)	477 807 154	buffer	/R	1	
11A	477 807 401	buffer	/L	1	M 058
(11A)	477 807 402	buffer	/R	1	M 058
12	900 146 011 02	oval-head screw AM 4 X 10		6	
13	477 807 191	speed nut		2	

Pos	Part Number	Name	Remarks	Qty	Model
14	900 143 047 07	tapping screw B 4,2 X 19		2	
15	477 941 379 A	electric motor pop-up headlight	-78	1	
(15)	477 941 379 B	electric motor pop-up headlight	79-	1	924
(15)	477 941 379 C	electric motor for pop-up headlight		1	TURBO
16	477 941 386	protection cap lower		1	924
(16)	477 941 388	protection cap		1	TURBO
17	477 941 387	protection cap		1	
-	477 941 383	diode pop-up headlight		X	
18	E 999 084 045 02	lock nut		1	
(18)	999 084 049 02	lock nut		1	
19	999 072 005 09	hexagon-head bolt M 6 X 12		3	
20	N 012 006 4	lock ring		3	
21	477 941 659 A	cap headlamp unit		2	
22	477 941 715	gasket		2	
23	477 941 751 D	high-beam headlight for F >>92481 09474 use also: intermediate cable 477.971.347	/L	1	
(23)	944 631 409 00	additional headlamp yellow	/L	1	(F)
(23)	477 941 752 D	high-beam headlight for F >>92481 09474 use also: intermediate cable 477.971.347	/R	1	
(23)	944 631 410 00	additional headlamp yellow	/R	1	(F)

Pos	Part Number	Name	Remarks	Qty	Model
24	477 941 771 B	headlamp		2	
(24)	477 941 773	headlamp (HALOGEN)	/RL	2	
25	111 941 341	terminal sleeve housing 3-POLIG		2	
26	111 971 977	plug with guide		6	
27	111 971 986	flat plug with clips		6	
29	999 631 202 90	halogen bulb YD 12 V 60/55 W		2	
(29)	999 631 202 91	halogen bulb YD 12 V 60/55 W		2	(F)
30	N 013 964 4	tapping screw B 4,2 X 16		8	
(30)	900 143 041 00	tapping screw B 3,9 X 19		8	
31	900 025 003 02	washer		8	
31A	477 941 543	spacer sleeve		X	
32	477 857 173	clip		2	
33	N 043 979 2	tapping screw BZ 4,2 X 45		2	
34	E N 030 116 1	oval-head screw		2	M 058
35	E N 030 117 2	oval-head screw		2	M 058
		fog headlamp see group 0/02/00			
		- -- E N D -- -			

Model	Year	MG	SG	Illustration	Restrictions	Update	11:24	06.04.2005	PORSCHE PET PORSCHE
924	79	9	05	905-10		187			

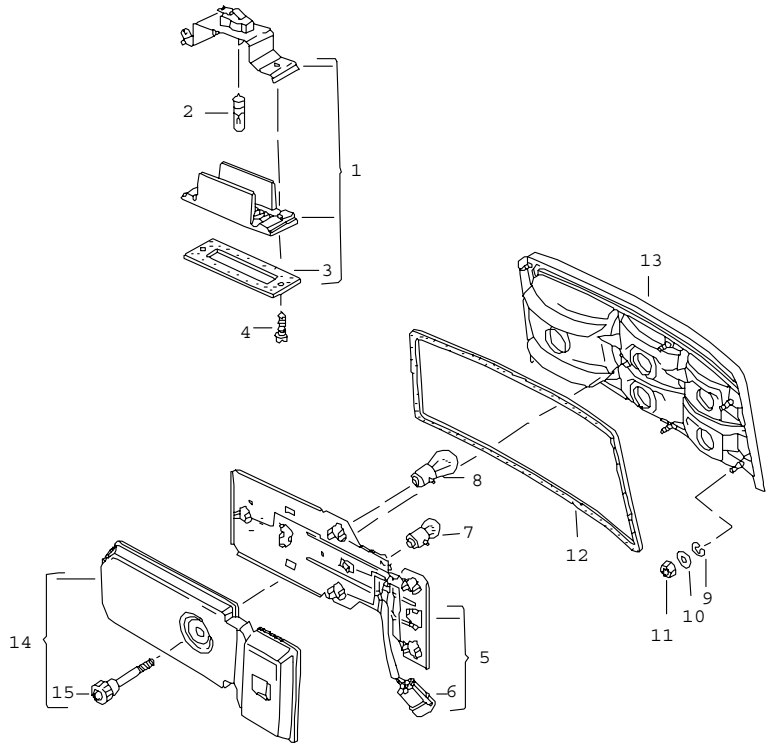

Pos	Part Number	Name	Remarks	Qty	Model
		license plate light rear light			
1	477 943 021 A	license plate light		2	
2	900 631 103 90	bulb HL 12 V, 4 W		2	
3	477 943 131	gasket		2	
4	N 013 961 2	tapping screw B 3,9 X 13		2	
5	477 945 113	bulb holder	/L	1	
(5)	477 945 114	bulb holder	/R	1	
6	803 971 980	connector 7-pole		2	
7	900 631 104 90	bulb		2	
8	900 631 127 90	bulb RL 12 V, 21 W		7	
9	N 012 005 3	lock ring		12	
10	N 012 225 1	spring washer		12	
11	N 011 005 14	hexagon nut		12	
-	000 043 172 00	sealing cord $ 9 MM roller 10M		*	
12	-	1070 MM		2	
13	477 945 205	housing	/L	1	
(13)	477 945 206	housing	/R	1	
(13)	477 945 215	housing for cars with rear fog light	/L	1	
(13)	477 945 216	housing for cars with rear fog light	/R	1	
14	477 945 285	cap		2	
15	477 945 285	cap		2	
		- -- E N D -- -			

Model	Year	MG	SG	Illustration	Restrictions	Update	11:24	06.04.2005	PORSCHE	PET	PORSCHE
924	79	9	05	905-15		187					

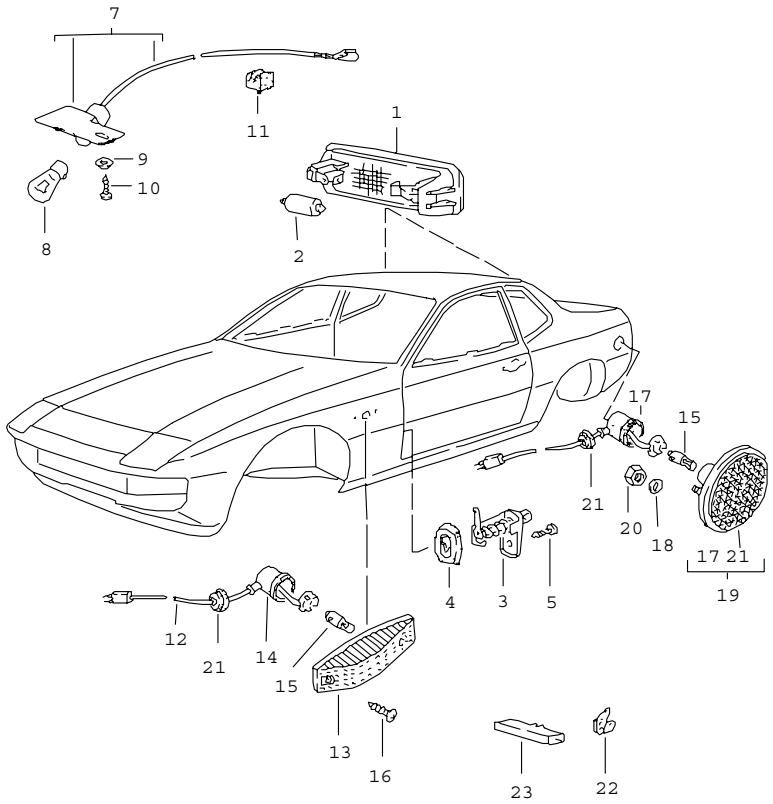

Pos	Part Number	Name	Remarks	Qty	Model
		interior light direction indicator light lateral			
1	823 947 105 B	interior light		1	
(1)	823 947 105 B	interior light		1	
(1)	171 947 311	glove compartment light		1	
2	900 631 106 90	linolite lamp K 12 V, 10 W		2	
(2)	999 631 018 90	bulb M 12 V, 3 W		1	
3	968 613 601 00	contact switch		2	
4	944 613 114 00	gasket		2	
5	N 013 957 5	tapping screw BZ 3,5 X 9,5		2	
7	477 947 601 A	engine compartment lamp		1	
8	900 631 115 90	bulb G 12 V, 10 W		1	
9	900 151 028 02	washer		1	
10	900 143 031 02	oval-head sheetmetal screw B 4,2 X 9,5		1	
11	477 947 633	clip		3	
12	477 949 111	bulb holder		2	M 046
13	E 321 949 117	side turn signal yellow		2	M 046
14	321 945 139	gasket side turn signal		2	M 046
15	900 631 103 90	bulb HL 12 V, 4 W		6	M 046
16	N 013 964 4	tapping screw B 4,2 X 16		4	M 046
21	E 311 971 913	grommet		6	M 046
22	111 971 511	line distributor		2	M 046
23	111 971 977	plug with guide simple		2	M 046
		- -- E N D -- -			

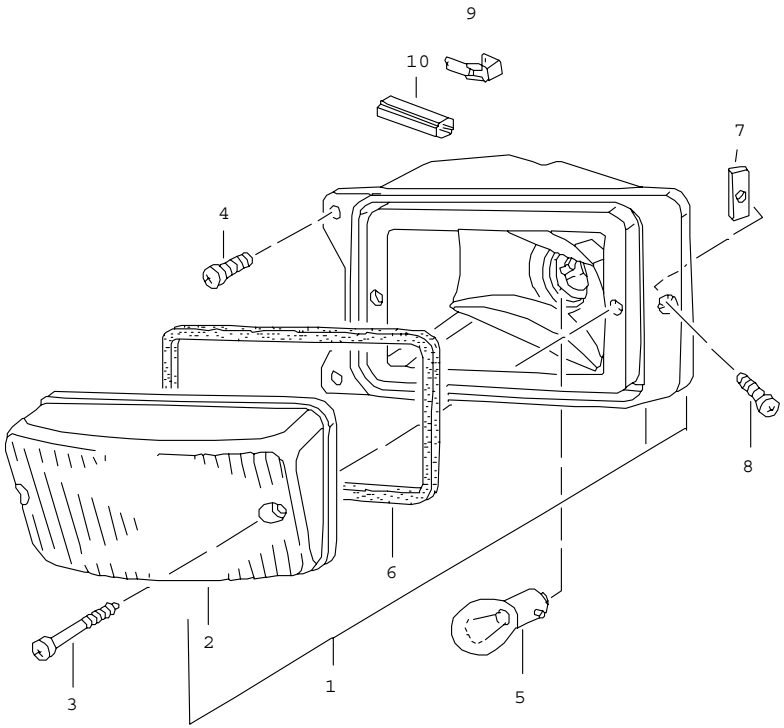

Pos	Part Number	Name	Remarks	Qty	Model
		direction indicator light front			
1	477 953 043	direction indicator light not for (USA),(CDN) F >>92481 01086 use also: intermediate cable 477.971.347	/L	1	
(1)	477 953 044	direction indicator light not for (USA),(CDN) F >>92481 01086 use also: intermediate cable 477.971.347	/R	1	
-	477 971 347	intermediate cable F >>92481 01086		X	
2	477 953 161	lens not for (USA),(CDN)	/L	1	
(2)	477 953 161	lens	/L	1	M 034
(2)	477 953 162	lens not for (USA),(CDN)	/R	1	
(2)	477 953 162	lens	/R	1	M 034
3	331 945 185	oval-head screw not for (USA),(CDN)		4	
4	900 146 011 02	oval-head screw AM 4 X 10		4	
5	900 631 127 90	bulb RL 12 V, 21 W		2	
6	477 953 165	gasket		2	
7	477 953 661	threaded plate		1	
8	E N 014 136 4	oval-head screw BM 4 X 25 Z		2	
9	111 971 511	line distributor		1	M 034
-	111 971 911 A	rubber sleeve F >>92481 01086		2	

Pos	Part Number	Name	Remarks	Qty	Model	Pos	Part Number	Name	Remarks	Qty	Model
10	111 971 921	protection cap for flat connector		4	M 034						
		- -- E N D -- -									

Model	Year	MG	SG	Illustration	Restrictions	Update	11:24	06.04.2005	PORSCHE PET PORSCHE
924	79	9	06	906-00		187			

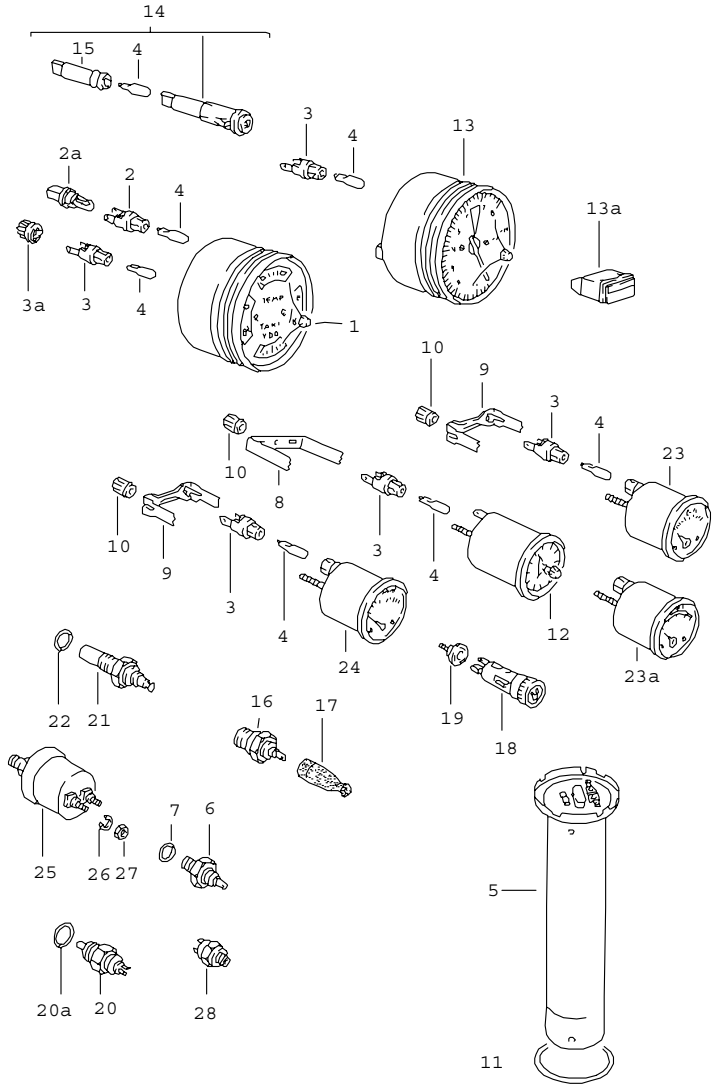

Pos	Part Number	Name	Remarks	Qty	Model
		instruments			
1	477 919 033	instrument cluster for XK/XJ	-78	1	
(1)	477 919 033 B	instrument cluster	79-	1	924
(1)	477 919 033 C	instrument cluster	79-	1	TURBO
2	914 631 179 10	bulb holder		5	
2A	999 631 301 90	bulb		7	
3	999 632 017 02	bulb holder		6	
(3)	477 919 301	bulb holder indicator light generator	-78	1	
3A	928 641 927 00	bulb holder indicator light generator	79-	1	
(3)	477 919 213	bulb holder clock		1	
4	900 631 132 90	bulb W 12 V 1,2 W		X	
(4)	900 631 019 90	bulb 12 V - 3 W		1	
5	477 919 051	tank gauge F >>92491 03157		1	924
5	477 919 051	tank gauge F 92491 04052>> F 92494 00056>>		1	
(5)	477 919 051 B	tank gauge F 92491 03158>> F >>92491 04051 F 92494 00051>> F >>92494 00055		1	
6	021 919 081 B	oil pressure switch		1	
7	N 013 808 3	sealing ring		1	
8	E 477 919 115	holder clock		1	
9	321 919 115 C	holder for oil pressure gauge oil temperature gauge		2	M 414
10	411 957 117	knurled nut		5	

Pos	Part Number	Name	Remarks	Qty	Model
11	113 919 131 A	sealing ring F >>92491 03157		1	924
11	113 919 131 A	sealing ring F 92491 04052>> F 92494 00056>>		1	
(11)	477 919 133	sealing ring F 92491 03158>> F >>92491 04051 F 92494 00051>> F >>92494 00055		1	
12	477 919 211	clock		1	924
(12)	477 919 211 A	clock		1	TURBO
13	477 919 205 A	tachometer	-78	1	
(13)	477 919 205 G	tachometer	79-	1	924
(13)	477 919 205 D	tachometer		1	TURBO
14	477 919 209	indicator light for high beam		1	
(14A)	113 919 232 D	indicator light		1	
(14A)	E 911 632 013 05	indicator light brake	/RL	1	
15	111 919 243	bulb holder		1	
16	477 919 268	sender oil temperature gauge		1	M 414
17	477 971 933	protection cap		1	M 414
(17)	E 111 951 195 A	rubber sleeve oil temperature gauge		1	
18	477 919 305	cigarette lighter		1	
-	N 012 469 1	snap ring for cigarette lighter		1	
19	411 919 317	glower		1	
20	084 941 521	switch	-10.78	1	924
(20)	084 941 521	back-up light switch	11.78-	1	
20A	900 123 106 30	sealing ring		1	
21	047 919 501 A	temperature sensor		1	
22	N 013 806 2	sealing ring		1	
23	477 919 541	oil temperature gauge		1	M 414
23A	A 477 919 531	voltmeter		1	924
(23A)	477 919 531 B	voltmeter		1	TURBO
24	477 919 551 E	oil pressure indicator		1	M 414
(24)	E 477 919 551 C	oil pressure indicator		1	TURBO
25	047 919 561	oil pressure sender		1	
26	N 012 221 3	spring washer		2	
27	N 011 004 6	hexagon nut		2	
28	113 945 515 G	stop light switch 3-pole		1	

- -- E N D -- -

Model	Year	MG	SG	Illustration	Restrictions	Update				
924	79	9	06	906-05		187	11:25	06.04.2005	PORSCHE	PET	PORSCHE

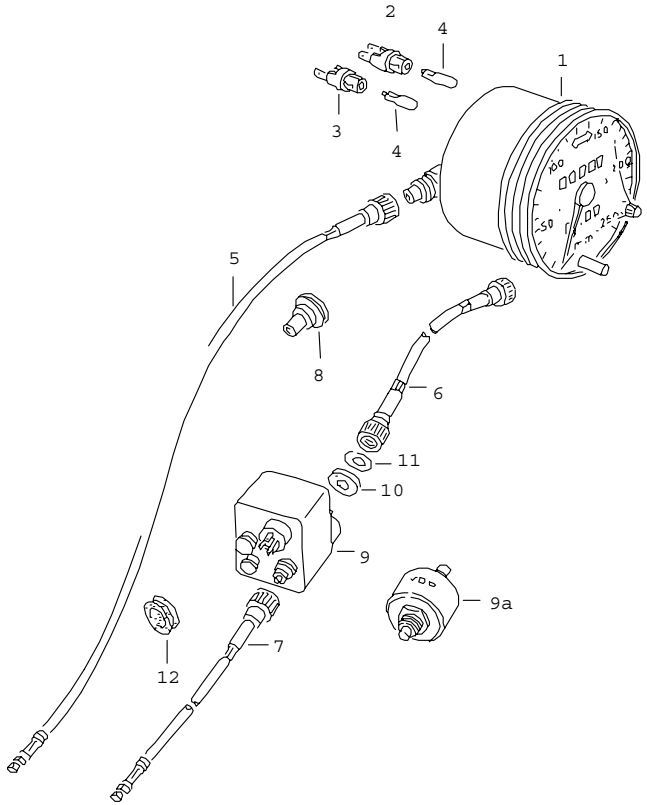

Pos	Part Number	Name	Remarks	Qty	Model
		speedometer	-78		
1	E 477 957 021	speedometer not for (USA),(J)		1	
(1)	477 957 023	speedometer MPH		1	M 020
2	914 631 179 10	bulb holder		1	
3	999 632 017 02	bulb holder		2	
4	900 631 132 90	bulb		3	
5	142 957 801 C	drive shaft for XK	/LL	1	
(5)	211 957 801 E	drive shaft	/RL	1	
-	900 116 003 02	circlip		1	
8	477 957 861	rubber sleeve	/LL	1	
(8)	477 823 591	grommet	/RL	1	
12	113 957 855	rubber sleeve		1	
		- -- E N D -- -			

Model	Year	MG	SG	Illustration	Restrictions	Update				
924	79	9	06	906-10		187	11:25	06.04.2005	PORSCHE	PET	PORSCHE

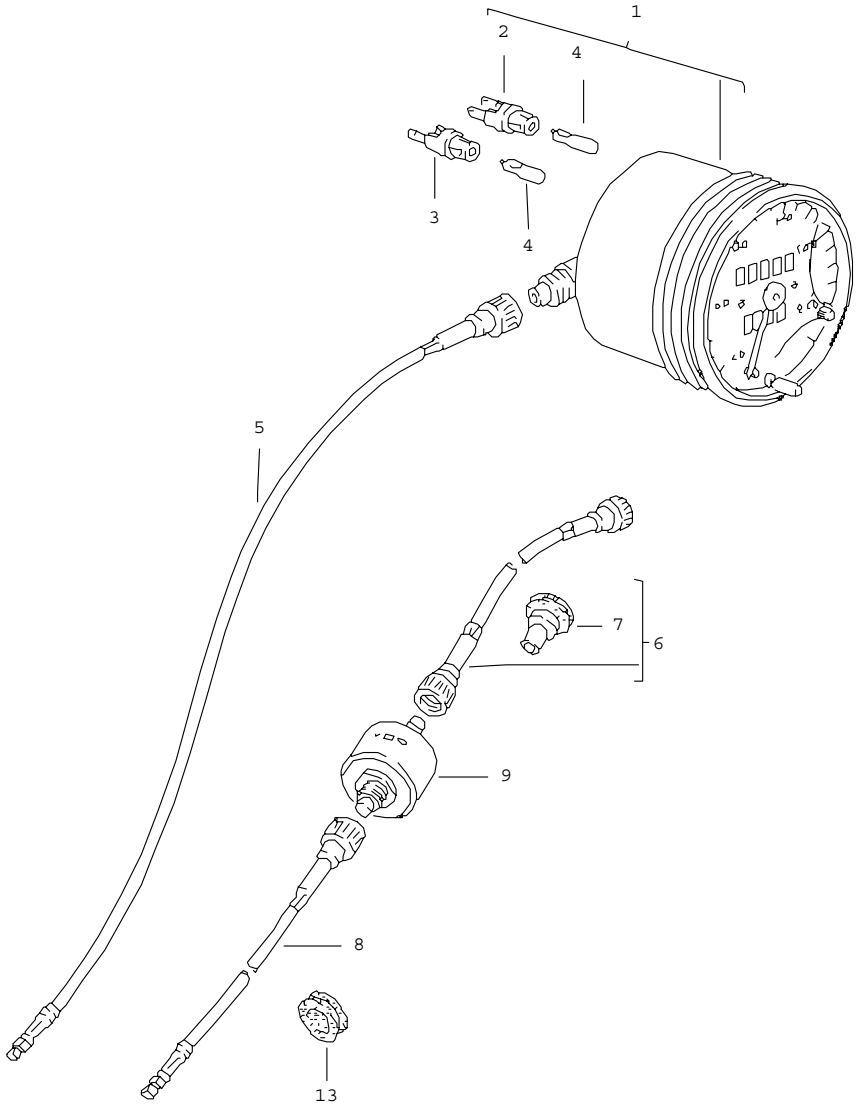

Pos	Part Number	Name	Remarks	Qty	Model
		speedometer			79
1	944 641 021 00	speedometer not for (USA),(J)		1	924
(1)	477 957 031 C	speedometer		1	TURBO
(1) A	944 641 025 00	speedometer 170 MPH		1	924
(1)	944 641 025 00	speedometer 170 MPH / 260 KM/H	/RL	1	924
2	914 631 179 10	bulb holder		1	
3	999 632 017 02	bulb holder		2	
4	900 631 132 90	bulb		3	
5	142 957 801 C	drive shaft not for (J)	/LL	1	
(5)	211 957 801 E	drive shaft	/RL	1	
7	477 957 861	rubber sleeve not for (J)	/LL	1	
(7)	477 823 591	grommet	/RL	1	
-	900 116 003 02	circlip		1	
13	113 957 855	rubber sleeve		1	
		- -- E N D -- -			

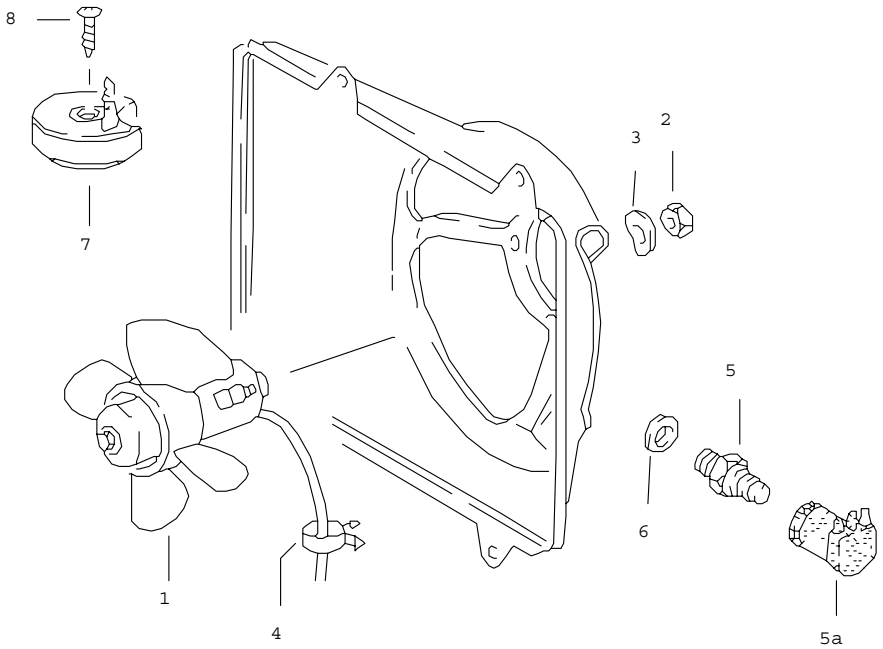

Pos	Part Number	Name	Remarks	Qty	Model
		electric fan			
1	477 959 455 C	electric fan		1	
(1)	823 959 455 F	electric fan use also:		1	M 573
-	E 477 971 349	intermediate cable		X	
2	900 076 010 02	hexagon nut		3	
3	N 011 524 7	washer		3	
4	999 651 168 40	cable holder		1	
5	823 959 481 F	switch		1	
5A	477 971 934	protection cap		1	
6	900 123 118 30	sealing ring A 22 X 27		1	
7	477 905 053	series resistor		1	
(7)	477 905 052	series resistor F 92471 05387>>		1	M 573
8	N 013 968 1	tapping screw B 4,8 X 13	-78	1	
(8)	N 013 964 4	tapping screw B 4,2 X 16	79-	1	
-	E 477 971 349	intermediate cable use also: 477.959.455.B 823.959.455.F F >>92471 05386		1	
		- -- E N D -- -			

Model	Year	MG	SG	Illustration	Restrictions	Update		
924	79	9	98	REP		187	8:51	12.04.2005

Pos	Part Number	Name	Remarks	Qty	Model
		repair kits			
>>	> 477 955 997	installation set headlight washer system F >>92481 00776 comprising:		1	
-	477 955 451 A	fluid tank		1	
-	911 628 167 00	cover		1	
-	477 955 461	speed nut 6,3 X 22		1	
-	900 151 029 02	washer B 6,4		1	
-	N 013 891 1	tapping screw B 6,3 X 19		1	
-	477 809 035	support		1	
-	900 075 083 02	hexagon-head bolt M 8 X 25		1	
-	N 011 525 13	washer A 8,4		1	
-	900 027 015 02	lock ring B 8		1	
-	N 011 008 8	hexagon nut M 8		1	
-	477 955 661	support		1	
-	477 955 679 A	pump		1	
-	E 900 014 004 02	pan-head screw M 5 X 15		3	
-	N 012 005 3	lock ring B 5		3	
-	N 011 005 14	hexagon nut M 5		3	
-	N 011 692 3	washer 5,1		3	
-	E N 020 340 1	hose 10 X 3 X 500 MM		1	
-	N 020 126 1	pipe 12,5 X 1,25 X 2000 MM		1	
-	N 020 301 1	hose 4 X 1 X 500 MM		1	
-	113 955 975 B	t-piece		1	

Model	Year	MG	SG	Illustration	Restrictions	Update		
924	79	9	98	REP		187	8:51	12.04.2005

Pos	Part Number	Name	Remarks	Qty	Model
-	E 113 955 187	nozzle		2	
-	477 955 194	connecting piece		2	
-	477 955 195 B	retainer spring		2	
-	477 955 179	spray nozzle		2	
-	900 074 015 02	hexagon-head bolt M 6 X 30		1	
-	900 151 029 02	washer 6,4		2	
-	900 076 010 02	hexagon nut M 6		1	
-	N 012 226 5	spring washer		1	
-	135 937 501 A	terminal sleeve housing		1	
-	113 955 200	relay		1	
-	825 971 990	terminal sleeve housing		1	
-	111 937 077 E	line distributor		1	
-	477 971 205	wiring harness		1	
-	E 477 971 322	double line		1	
-	477 971 827 B	cable connection		1	
-	477 955 702	switch together with M036 use also:		1	
-	911 628 809 00	connecting piece		2	
-	477 955 196	desk pad		2	
>>	> 477 955 997 A	installation set headlight washer system F 92481 00777>> F >>92481 09474 comprising:		1	
-	477 955 679 A	pump		1	
-	E 900 014 004 02	pan-head screw M 5 X 15		2	
-	N 012 005 3	lock ring B 5		2	
-	N 011 692 3	washer 5,1		2	
-	N 011 005 14	hexagon nut M 5		2	

Model	Year	MG	SG	Illustration	Restrictions	Update		
924	79	9	98	REP		187	8:51	12.04.2005

Pos	Part Number	Name	Remarks	Qty	Model
-	999 181 806 40	hose 10 X 3 X 500 MM		1	
-	N 020 301 1	hose 4 X 1 X 500 MM		1	
-	N 020 126 1	pipe 12,5 X 1,25 X 2000 MM		1	
-	113 955 975 B	t-piece		1	
-	E 113 955 187	nozzle		2	
-	477 955 194	connecting piece		2	
-	477 955 195 B	retainer spring		2	
-	477 955 179	spray nozzle		2	
-	135 937 501 A	terminal sleeve housing		1	
-	113 955 200	relay		1	
-	825 971 990	terminal sleeve housing		1	
-	477 971 827 B	cable connection		1	
-	477 971 205	wiring harness		1	
-	E 477 971 322	double line		1	
-	477 955 702	switch together with M036 use also:		1	
-	911 628 809 00	connecting piece		2	
-	477 955 196	desk pad		2	
>>	> 477 955 997 B	installation set headlight washer system comprising:	79-	1	
-	191 955 681	pump		1	
-	431 955 465 A	gasket		1	
-	N 020 126 1	pipe 12,5 X 1,25		X	
-	-	410 MM		1	
-	-	890 MM		1	
-	-	100 MM		1	
-	113 955 975 B	t-piece		1	
-	477 955 183	pressure control valve		2	

Model	Year	MG	SG	Illustration	Restrictions	Update		
924	79	9	98	REP		187	8:51	12.04.2005

Pos	Part Number	Name	Remarks	Qty	Model
-	477 955 177	jet carrier		2	
-	N 019 121 1	nut MPG 11		2	
-	928 618 111 00	relay		1	
-	135 937 501 A	terminal sleeve housing		1	
-	825 971 990	terminal sleeve housing		1	
-	111 937 077 E	line distributor		1	
-	477 971 827 B	cable connection		1	
-	477 971 205	wiring harness		1	
-	477 971 322 A	double line		1	
-	477 955 702	switch		1	
>>	> 477 955 995	installation set rear window wiper comprising:		1	TURBO
-	477 955 713 A	wiper motor		1	
-	477 955 715 B	plate		1	
-	N 012 226 5	spring washer B 6		3	
-	900 076 010 02	hexagon nut M 6		3	
-	477 955 737	cap		1	
-	477 955 439	grommet		2	
-	477 955 437	washer		1	
-	311 955 243 A	hexagon nut M 12 X 1		1	
-	211 955 275 A	cap		1	
-	477 955 409 A	wiper arm		1	
-	E 999 084 045 02	lock nut		1	
-	928 628 218 01	wiper blade		1	
-	477 971 345	harness		1	
-	477 971 346	wiring harness		1	
-	477 955 701	rocker switch		1	
-	111 941 189	drain bush		1	

Model	Year	MG	SG	Illustration	Restrictions	Update		
924	79	9	98	REP		187	8:51	12.04.2005

Pos	Part Number	Name	Remarks	Qty	Model
-	999 652 106 02	flat receptacle 6,3 X 1		3	
-	N 018 007 4	insulating hose 100 MM		X	
>>	> 477 941 903 A	installation set fog headlamp light-diffusing lens white comprising:	79-	1	
-	477 941 703 B	fog headlamp		2	
-	900 631 126 90	halogen bulb YC 12 V - 55 W		2	
-	N 011 010 6	hexagon nut M 10		2	
-	900 027 016 02	lock ring B 10		2	
-	900 025 008 09	washer A 10,5		2	
-	E 131 867 549	clamp		2	
-	477 941 535	switch		1	
-	477 941 535	switch		1	
-	E 141 957 397 A	bulb holder		1	
-	900 631 132 90	bulb W 12 V - 1,2 W		1	
-	477 963 137	relay		1	
-	477 971 490 A	harness		1	
-	477 971 491 A	harness		1	
-	477 971 827 B	cable connection		1	
>>	> 477 941 904 A	installation set fog headlamp light-diffusing lens yellow comprising:	79-	1	(F)
-	477 941 703 A	fog headlamp		2	
-	900 631 126 90	halogen bulb YC 12 V - 55 W		2	
-	N 011 010 6	hexagon nut M 10		2	
-	900 027 016 02	lock ring B 10		2	

Model	Year	MG	SG	Illustration	Restrictions	Update		
924	79	9	98	REP		187	8:51	12.04.2005

Pos	Part Number	Name	Remarks	Qty	Model
-	900 025 008 09	washer A 10,5		2	
-	E 131 867 549	clamp		2	
-	477 941 535	switch		1	
-	477 941 535	switch		1	
-	E 141 957 397 A	bulb holder		1	
-	900 631 132 90	bulb W 12 V - 1,2 W		1	
-	477 963 137	relay		1	
-	477 971 490 A	harness		1	
-	477 971 491 A	harness		1	
-	477 971 827 B	cable connection		1	
>>	> 477 941 903	installation set fog headlamp light-diffusing lens white comprising:	-78	1	
-	477 941 703 B	fog headlamp		2	
-	900 631 126 90	halogen bulb YC 12 V - 55 W		2	
-	N 011 010 6	hexagon nut M 10		2	
-	900 027 016 02	lock ring B 10		2	
-	900 025 008 09	washer A 10,5		2	
-	E 131 867 549	clamp		2	
-	477 941 535	switch		1	
-	477 941 535	switch		1	
-	E 141 957 397 A	bulb holder		1	
-	900 631 132 90	bulb W 12 V - 1,2 W		1	
-	928 615 119 00	relay		1	
-	E 477 971 490	harness		1	
-	477 971 491 A	harness		1	
-	477 971 946 A	intermediate cable		2	

Model	Year	MG	SG	Illustration	Restrictions	Update		
924	79	9	98	REP		187	8:51	12.04.2005

Pos	Part Number	Name	Remarks	Qty	Model
-	477 971 827 B	cable connection		1	
>>	> 477 941 904	installation set fog headlamp light-diffusing lens yellow comprising:	-78	1	(F)
-	477 941 703 A	fog headlamp		2	
-	900 631 126 90	bulb YC 12 V - 55 W		2	
-	N 011 010 6	hexagon nut M 10		2	
-	900 027 016 02	lock ring B 10		2	
-	900 025 008 09	washer A 10,5		2	
-	E 131 867 549	clamp		2	
-	477 941 535	switch		1	
-	477 941 535	switch		1	
-	E 141 957 397 A	bulb holder		1	
-	900 631 132 90	bulb W 12 V - 1,2 W		1	
-	928 615 119 00	relay		1	
-	E 477 971 490	harness		1	
-	477 971 491 A	harness		1	
-	477 971 946 A	intermediate cable		2	
-	477 971 827 B	cable connection		1	
		- -- E N D -- -			

M000	! SUMMARY OF OPTIONAL EXTRAS "M"!
M020	SPEEDOMETER WITH TWO SCALES MPH-KM/H
M027	VERSION FOR CALIFORNIA
M034	VERSION FOR ITALY
M036	IMPACT ABSORBERS
M036	FRONT AND REAR
M046	SIDE TURN SIGNALS
M058	IMPACT ABSORBERS FRONT AND REAR
M061	VERSION FOR GREAT BRITAIN
M062	VERSION FOR SWEDEN
M086	DRUM-BRAKES, SELF-ADJUSTING
M124	VERSION FOR FRANCE
M186	SEAT BELT FOR BACK SEATS
M187	H4-HEADLAMP FOR LEFT-HAND TRAFFIC
M190	INCREASED SIDE DOOR STRENGTH
M193	VERSION FOR JAPAN
M208	TRAILER COUPLING
M220	LOCKING DIFFERENTIAL 40 %
M249	AUTOMATIC TRANSMISSION
M256	ENGINE FOR RIGHT HAND DRIVE
M269	ADDITIONAL HEADLAMPS
M288	HEADLAMP WASHER
M404	STABILIZER, FRONT AND REAR
M414	COMBINED OIL PRESSURE AND TEMPERATURE GAUGE
M425	REAR WINDOW WIPER
M426	SPECIAL MODELS - WORLD CHAMPION 1976
M426	- USA 1978
M426	- SWITZERLAND 1978
M427	SPECIAL MODEL - FRANCE 1979
M429	SPECIAL MODEL - USA-SEBRING 1979
M450	LIGHT METAL RIM 6 J X 14
M450	VARNISHED BLACK, POLISHED RIM
M463	SIDE GLASSES TINTED
M471	EQUIPMENT GROUP 1, SPORTING
M471	924 - USA, CANADA, JAPAN
M474	SHOCK ABSORBER (SPORTING) FRONT AND REAR
M479	VERSION FOR AUSTRALIA
M481	MANUAL TRANSMISSION
M553	VERSION FOR USA, CANADA
M560	DETACHABLE ROOF
M565	SAFETY STEERING WHEEL, LEATHER
M568	GLASS PROTECTING AGAINST HEAT
M571	REAR FOG LAMP
M573	AIR CONDITIONER
M592	BRAKE FLUID LEVEL INDICATOR
M597	HEAVY DUTY BATTERY 63 AH AND
M597	STARTER 1,1 KW
M651	ELECTRIC WINDOW OPENER
M659	FOG HEAD LAMP
M981	LEATHER EQUIPMENT

TR203

THIS PARTS CATALOGUE CONTAINS ALL ORDER INFORMATION OF
TYPE 924 FROM MODEL YEAR 1976 TO MODEL YEAR 1979

IT IS AVAILABLE IN TWO EDITIONS IN THE FOLLOWING LANGUAGES:

EDITION
USA, CANADA - *

EDITION
ALL OTHER COUNTRIES - GERMAN

* - ENGLISH

- FRENCH

- ITALIAN

- SPANISH

UPDATING IS BEING PERFORMED BY CHANGING OF UPDATE.

THE EDITION CAN BE RECOGNIZED BY THE CURRENT NO.
YEAR IN THE BOTTOM LINE OF SUBJECT UPDATE.

THE PREVIOUS UPDATE SHOULD NO LONGER BE USED.

ALL ILLUSTRATIONS ARE SUBJECT TO CHANGE WITHOUT OBLIGATION.

"WE RESERVE THE RIGHT TO SUPPLY A SUBSEQUENTLY
PRODUCED COMPONENT, ON WHICH ADDITIONAL WORK
IS NECESSARY, INSTEAD OF THE COMPONENT LISTED IN
THE CATALOGUE"

Model	Year	MG	SG	Illustration	VIN No.	Update		
924	79	9	10	910		187	11:25	06.04.2005

T

EXPLANATION OF THE VERSION OF THE VEHICLE IDENT. NUMBERS (VIN)
USED IN THE CATALOGUE

```
 DIGIT:                          1 2 3   4   5   6 7 8 9 10

 EXAMPLE:                        9 2 4   9   1   0 0 2 5 3
                                 =====   =   =   =========
                                   !     !   !       !
VEHICLE TYPE--------------------------+  !   !       !
                                         !   !       !
MODEL YEAR----------------------------------+   !       !
                                                !       !
CODE FOR BODY AND ENGINE------------------------+       !
                                                        !
SERIAL NUMBER-------------------------------------------+
```

Model	Year	MG	SG	Illustration	VIN No.	Update		
924	79	9	10	910		187	11:25	06.04.2005

FR203

VEHICLE TYPE	MY	VEHICLE IDENT.NO.	ENGINE TYPE
924	76 6	92461 00051>05149	047.8 92 KW
924	77 7	92471 00051>>	047.8/9 92 KW
924 (USA)(CDN)(CAL)	77 7	92472 00001>>	047.6 74 KW
924 (USA)(CDN)(CAL)	77 7	92472 30001>>	047.4/5 85 KW
924 (J)	77 7	92473 00001>>	047.6 74 KW
924 (J)	77 7	92473 30001>>	047.4/5 85 KW
924	78 8	92481 00051>>	047.8/9 92 KW
924 (USA)(CDN)(CAL)	78 8	92482 00001>>	047.4/5 85 KW
924 (J)	78 8	92483 30001>>	047.4/5 85 KW
924	79 9	92491 00051>>	047.8/9 92 KW
924 (USA(CDN)(CAL)	79 9	92491 00001>>	047.4/5 85 KW
924 (J)	79 9	92493 30001>>	047.4/5 85 KW
924 TURBO	79 9	92494 00001>>	M31.01 125 KW

T

```
EXPLANATION OF THE MOTOR-NUMBERS USED IN THE CATALOGUE
======================================================

DIGIT:                                          1 2   3 4 5 6 7 8

EXAMPLE:                                        X K   0 0 2 1 3 6
                                                ===   ===========
                                                 !         !
ENGINE TYPE--------------------------------------+         !
                                                          !
SERIAL NUMBER-----------------------------------------------+
```

Model	Year	MG	SG	Illustration	VIN No.	Update		
924	79	9	10	910		187	11:26	06.04.2005

MR203

VEHICLE TYPE	ENGINE TYPE	MY	ENGINE NO.	TECHNICAL DATA
924	047.8	76 6	XK 000001>>	4ZYL/2,0L/ 92KW
924	047.8	77 7	XK 000001>>	4ZYL/2,0L/ 92KW
924 M249	047.9	77 7	XK 000001>>	4ZYL/2,0L/ 92KW
924 (GB)(AUS)	047.8	77 7	XJ 000001>>	4ZYL/2,0L/ 92KW
924 M249 (GB)(AUS)	047.9	77 7	XJ 000001>>	4ZYL/2,0L/ 92KW
924 (USA)(CDN)	047.6	77 7	XH 000001>>	4ZYL/2,0L/ 74KW
924 (USA)(CDN)	047.4	77 7	XG 300001>>	4ZYL/2,0L/ 85KW
924 M249 (USA)(CDN)	047.5	77 7	XG 300001>>	4ZYL/2,0L/ 85KW
924 (CAL)(J)	047.6	77 7	XF 000001>>	4ZYL/2,0L/ 74KW
924 (CAL)	047.4	77 7	XE 100050>>	4ZYL/2,0L/ 85KW
924 M249 (CAL)	047.5	77 7	XE 100050>>	4ZYL/2,0L/ 85KW
924 (J)	047.4	77 7	XG 300050>>	4ZYL/2,0L/ 85KW
924 M249 (J)	047.5	77 7	XG 300050>>	4ZYL/2,0L/ 85KW
924	047.8	78 8	XK 000001>>	4ZYL/2,0L/ 92KW
924	047.8	78 8	XJ 000001>>	4ZYL/2,0L/ 92KW
924 M249	047.9	78 8	XK 000001>>	4ZYL/2,0L/ 92KW
924 M249	047.9	78 8	XJ 000001>>	4ZYL/2,0L/ 92KW
924 (USA)(CDN)(J)	047.4	78 8	XG 000001>>	4ZYL/2,0L/ 85KW
924 M249 (USA)(CDN)(J)	047.5	78 8	XG 000001>>	4ZYL/2,0L/ 85KW
924 (CAL)	047.4	78 8	XE 000001>>	4ZYL/2,0L/ 85KW
924 M249 (CAL)	047.5	78 8	XE 000001>>	4ZYL/2,0L/ 85KW
924	047.8	79 9	XK 000001>>	4ZYL/2,0L/ 92KW
924	047.8	79 9	XJ 000001>>	4ZYL/2,0L/ 92KW
924 M249	047.9	79 9	XK 000001>>	4ZYL/2,0L/ 92KW
924 M249	047.9	79 9	XJ 000001>>	4ZYL/2,0L/ 92KW
924 (USA)(CDN)(J)	047.4	79 9	XG 000001>>	4ZYL/2,0L/ 85KW
924 M249 (USA)(CDN)(J)	047.5	79 9	XG 000001>>	4ZYL/2,0L/ 85KW
924 (CAL)	047.4	79 9	XE 000001>>	4ZYL/2,0L/ 85KW
924 M249 (CAL)	047.5	79 9	XE 000001>>	4ZYL/2,0L/ 85KW
924 TURBO	M31.01	79 9	31 010001>>	4ZYL/2,0L/125KW

TR205

```
      EXPLANATION OF THE TRANSMISSION-NUMBERS USED IN THE CATALOGUE
      =============================================================


      DIGIT:                                    1 2   3 4   5 6   7

      EXAMPLE:                                  Y R   1 9   0 2   9
                                                ===   ===   ===   =
                                                 !     !     !    !
                                                 !     !     !    !
      IDENTIFICATION LETTER----------------------+     !     !    !
                                                       !     !    !
      MANUFACTURING DAY--------------------------------+     !    !
                                                             !    !
      MANUFACTURING MONTH------------------------------------+    !
                                                                  !
      MANUFACTURING YEAR-------------------------------------------+


      G31.01
      ======

      DIGIT:                                    1 2 3 4   5 6 7 8 9  (10 11)

      EXAMPLE:                                  3 1 0 1   0 1 2 9 1  ( 1 2 )
                                                =======   =========  =======
                                                   !           !        !
      TRANSMISSION VERSION-------------------------+           !        !
                                                               !        !
      SERIAL NUMBER--------------------------------------------+        !
                                                                       !
      LIMITED SLIP DIFFERENTIAL------------------------------------------+
```

Model	Year	MG	SG	Illustration	VIN No.	Update		
924	79	9	10	910		187	11:26	06.04.2005

GR203

VEHICLE TYPE	TRANSM. TYPE	MY	TRANSMISSION NO.	TECHNICAL DATA
924	088/6	76 6	YR 00001>>	4-SPEED
924	088/6	77 7	YR 00001>>	4-SPEED
924 M249	087/3	77 7	RK 00001>>	3-SPEED
924 (USA)(CDN)(CAL)(J)	088/A	77 7	XT 00001>>	4-SPEED
924 M249 (USA)(CDN)(CAL)(J)	087/6	77 7	RL 00001>>	4-SPEED
924	088/6	78 8	YR 00001>>	4-SPEED
924	016 Z	78 8	VA 00001>>	5-SPEED
924 M249	087/3	78 8	RK 00001>>	3-SPEED
924 (USA)(CDN)(CAL)(J)	088/A	78 8	XT 00001>>	4-SPEED
924 M249 (USA)(CDN)(CAL)(J)	087/6	78 8	RL 00001>>	3-SPEED
924	088/6	79 9	YR 00001>>	4-SPEED
924	016 Z	79 9	VA 00001>>	5-SPEED
924 M249	087/3	79 9	RK 00001>>	3-SPEED
924 (USA)(CDN)(CAL)(J)	016 Y	79 9	VB 00001>>	5-SPEED
924 M249 (USA)(CDN)(CAL)(J)	087/6	79 9	RL 00001>>	3-SPEED
924 TURBO	G31.01	79 9	31 0100001>>	5-SPEED

TR201

LEGENDS AND NOTICES

IN COLUMN -S- STATUS

N	NEW ADDITION
P	PART ALREADY IN PROGRAMME, BUT NEW AT THIS APPLICATION
W	DELETED AT THIS APPLICATION, BUT CONTINUED TO BE CARRIED
A	STOCK TO BE USED UP
U	DELETED WITHOUT REPLACEMENT
*	PART ALSO OR ONLY AVAILABLE IN REPAIR KIT
>	ALSO AVAILABLE IN EXCHANGE

IN COLUMN - ILL. -

1	IDENTIFICATION NO. IN ILLUSTRATION
(1)	PART ONLY SIMILAR AS ILLUSTRATED
-	PART IS NOT ILLUSTRATED

FIG.-NUMBERS FOR WHICH THERE IS SHOWN NO TEXT ARE NOT VALID FOR THIS EDITION OF CATALOGUE

IN COLUMN -PART NUMBER/CODE-

000 000 000 00	PART NUMBER EQUALS ORDERING NO., IF A CODE IS SHOWN, IT WILL HAVE TO BE PART OF ORDERING NUMBER
AC3	COLOUR CODE

IN COLUMN -TEXT

INSTALLATION WIRH ENGINE OR CHASSIS NUMBER-RANGE

		EXAMPLE:
M XK 001291 >>		FROM ENGINE NO.
F >> 92491 001291		UP TO VIN

TR201

```
                    IN COLUMN  - A -
                    ----------------

                    IDENTIFICATION LETTER FOR PERIOD OF INSTALLATION
                    THAT IS REPEATED SEVERAL TIMES IN THE CATALOG GROUP.

                    EXPLANATION PLEASE FIND IN TEXT COLUMN OF THE CATALOG GROUP


                    IN COLUMN   - QU -   = NO. OF PIECES
                    ------------------------------------

          1         NUMBER PER APPLICATION

          X         NUMBER AS NEEDED

          *         AVAILABLE ONLY IN RUNNING LENGTHS   1 = 1 METRE


                    IN COLUMN   - MODEL/SYMBOL -
                    ----------------------------

        M650        OPTIONAL EQUIPMENT  -  SEE M-NO. LIST

         -79        LIMITATION OF MODEL YEAR FOR INSTANCE: VALID UP TO
                    END OF MODEL YEAR 1979

        /LL         LHD

        /RL         RHD
                    ---------+
        /V          FRONT    I
                             I
        /H          REAR     I
                             I---> APPLIES TO
        /L          LEFT     I     DIRECTION OF TRAVEL
                             I
        /R          RIGHT    I
                    ---------+

       AUT.         AUTOMATIC

        WW          THE PART CAN BE USED INSTEAD OF THE
                    PRECEDING ONE
```

TR206

EQUIPMENT BY COUNTRY REGULATIONS

(A)	AUSTRIA
(AUS)	AUSTRALIA
(B)	BELGIUM
(CDN)	CANADA
(CH)	SWITZERLAND
(D)	FEDERAL REPUBLIC OF GERMANY
(DK)	DENMARK
(E)	SPAIN
(F)	FRANCE
(GB)	GREAT BRITAIN
(GR)	GREECE
(HK)	HONGKONG
(I)	ITALY
(J)	JAPAN
(L)	LUXEMBURG
(N)	NORWAY
(NL)	NETHERLANDS
(NS)	NEW ZEALAND
(P)	PORTUGAL
(RC)	TAIWAN
(S)	SWEDEN
(SA)	SAUDI ARABIA
(SF)	FINLAND
(USA)	UNITED STATES OF AMERICA