Model	Year	MG	SG	Illustration	Restrictions	Update				
924	85	0	01	1-00		187	11:40	06.04.2005	PORSCHE	PET	PORSCHE

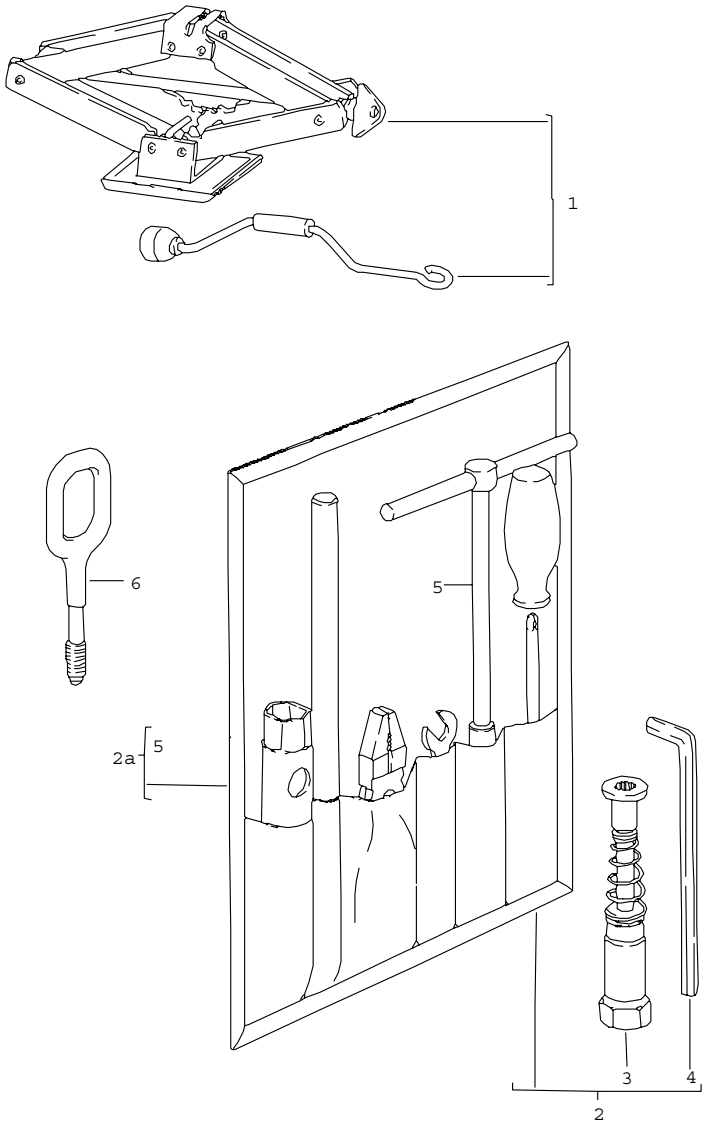

Pos	Part Number	Name	Remarks	Qty	Model
		accessories			
1	477 011 033	scissors type jack		1	
(2A)	944 721 027 05	tool bag with contents comprising:		1	
		tool bag angular screw driver		1	
3	477 012 233	spark plug wrench		1	
		rim wrench		1	
		operating rod for rim wrench		1	
		double-end spanner 10 X 13		1	
		handle		1	
		insert for cross-recess screw and slotted screw		1	
		universal pliers		1	
-	928 361 311 00	hook for cover wheel nut		1	
		use also:			
6	996 721 151 00	towing lug	82-	1	
6	928 722 101 05	towing lug	82-	1	M 058
		- -- E N D -- -			

Model	Year	MG	SG	Illustration	Restrictions	Update		
924	85	0	01	1-05		187	11:41	06.04.2005

Pos	Part Number	Name	Remarks	Qty	Model
		sticker			
-	477 000 257 G	sticker tyre pressure 185/70 - HR 14		1	924
-	477 000 179 A	sticker		1	924(AUS)
-	477 000 257 E	sticker tyre pressure 205/60 - HR 15		1	924
-	477 000 203	sticker		1	924(AUS)
-	937 701 127 00	sticker tyre pressure 185/70 - VR 15	-81	1	TURBO
-	477 000 205	sticker		1	TURBO (AUS)
-	937 701 127 00	sticker tyre pressure 205/55 - VR 16	-81	1	TURBO
-	E 477 000 215	sticker		1	TURBO(AUS)
-	937 701 127 00	sticker	82	1	TURBO
-	937 701 127 00	sticker		1	GT
-	911 701 137 01	sticker emergency wheel		1	
-	477 000 285	sticker high voltage		1	
-	477 000 255 A	sticker adjustment ignition point	-80	1	TURBO
-	E 477 000 255 D	sticker adjustment ignition point	81-	1	TURBO
-	E 477 000 255 C	indication sticker adjustment ignition point		1	GT
-	477 000 275 F	sticker engine specifications	-83	1	924(S)
-	477 000 275 H	sticker engine specifications	84-	1	924(S)
-	477 000 275 D	sticker	-80	1	TURBO(S)
-	477 000 275 G	sticker	81-	1	TURBO(S)
-	477 000 279 C	sticker	-80	1	924(AUS)
-	477 000 279 E	sticker	81	1	924(AUS)

Model	Year	MG	SG	Illustration	Restrictions	Update		
924	85	0	01	1-05		187	11:41	06.04.2005

Pos	Part Number	Name	Remarks	Qty	Model
-	477 000 279 G	sticker	82-	1	924(AUS)
-	E 477 000 279 D	sticker	-80	1	TURBO(AUS)
-	E 477 000 279 F	sticker	81	1	TURBO(AUS)
-	E 477 000 279 H	sticker	82-	1	TURBO(AUS)
-	477 000 269	indication sticker bleeding		1	924
-	477 000 269 A	indication sticker bleeding		1	924(F)
-	477 000 269 C	indication sticker bleeding		1	TURBO
-	477 000 269 B	indication sticker bleeding		1	TURBO(F)
-	411 000 263 A	sticker octane number		1	
		- -- E N D -- -			

Model	Year	MG	SG	Illustration	Restrictions	Update				
924	85	0	02	2-00		187	11:41	06.04.2005	PORSCHE	PET	PORSCHE

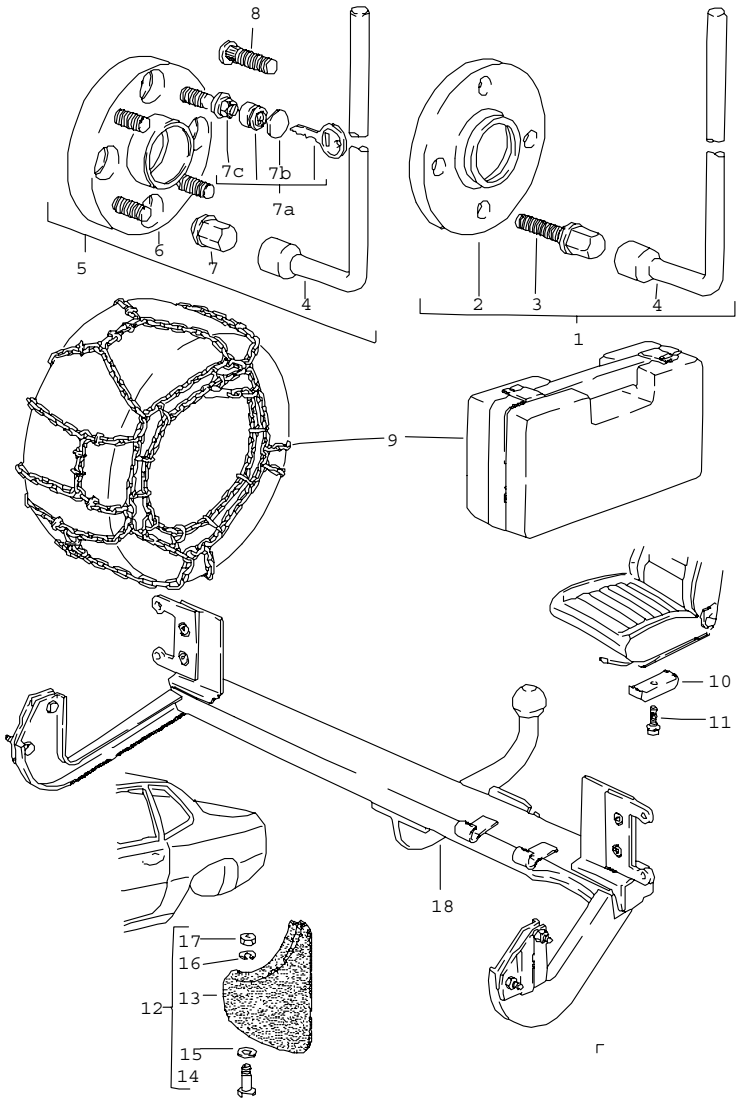

Pos	Part Number	Name	Remarks	Qty	Model
		accessories			
1	E 477 698 153 A	installation set widening of track 15 MM for rear axle only together with alloy wheel 6 J X 14 4- hole		1	924
2	477 601 103 C	spacer ring 15 MM		2	
3	914 361 315 01	wheel bolt		8	
4	999 571 045 02	rim wrench		1	
5	E 477 698 154	installation set widening of track 28 MM for rear axle only together with alloy wheel 6 J X 14 4- hole		1	924
6	477 601 093	spacer ring 28 MM		2	
7	999 182 003 36	wheel nut		8	
4	999 571 045 02	rim wrench		1	
8	904 341 671 00	wheel bolt		8	924
7A	928 361 047 03	wheel nut lockable 1 set		1	
7B	928 361 310 00	cap for RADMUTTERSCHLOSS		1	
7C	928 361 306 03	wheel nut lockable without lock		4	
		snow chains			
9	E 477 601 901	edge chain 1 set 165 R 14		1	
(9)	911 361 903 00	cross chain 1 set 165 R 14		1	

Pos	Part Number	Name	Remarks	Qty	Model
(9)	E 477 601 905	ring chain 1 set 165 R 14		1	
(9)	477 601 903	edge chain 1 set 185/70 R 14		1	
(9)	911 361 909 00	snow chains 1 set 185/70 R 14		1	
(9)	911 361 903 00	cross chain 1 set 185/70 R 14		1	
(9)	477 601 907	ring chain 1 set 185/70 R 14		1	
(9)	E 901 361 901 00	edge chain 1 set 185/65 R 15 185/70 R 15		1	
(9)	911 361 902 00	cross chain 1 set 185/65 R 15 185/70 R 15		1	
(9)	911 361 909 00	snow chains 1 set 185/70 R 15		1	
(9)	911 361 909 00	snow chains 1 set 185/70 R 15 215/60 R 15 205/55 R 16		1	
		vertical seat adjustment			
10	911 521 493 00	spacer 13 MM		X	
11	900 067 089 02	pan-head screw M 6 X 25 for vertical seat adjustment 13 MM		X	
(11)	N 014 749 2	pan-head screw M 6 X 40 for vertical seat adjustment 26 MM		X	
12	E 477 821 805	mud flap 1 set		1	
13	477 821 161 A	mud flap	/L	1	
(13)	477 821 162 A	mud flap	/R	1	
14	N 010 264 4	hexagon-head bolt M 5 X 20		6	
15	N 011 692 3	washer		6	
16	N 012 005 3	lock ring B 6		6	
17	N 011 005 14	hexagon nut M 5		6	
		trailer coupling			
18	E 477 800 805 D	trailer coupling installation set		1	
-	928 006 901 00	sticker drawbar load		1	
-	111 919 209 A	indicator light		1	
-	900 631 132 90	bulb 12 V, 1,2 W		1	
-	431 953 231	relay		1	
		- -- E N D -- -			

Model	Year	MG	SG	Illustration	Restrictions	Update				
924	85	0	02	2-05		187	11:41	06.04.2005	PORSCHE	PET	PORSCHE

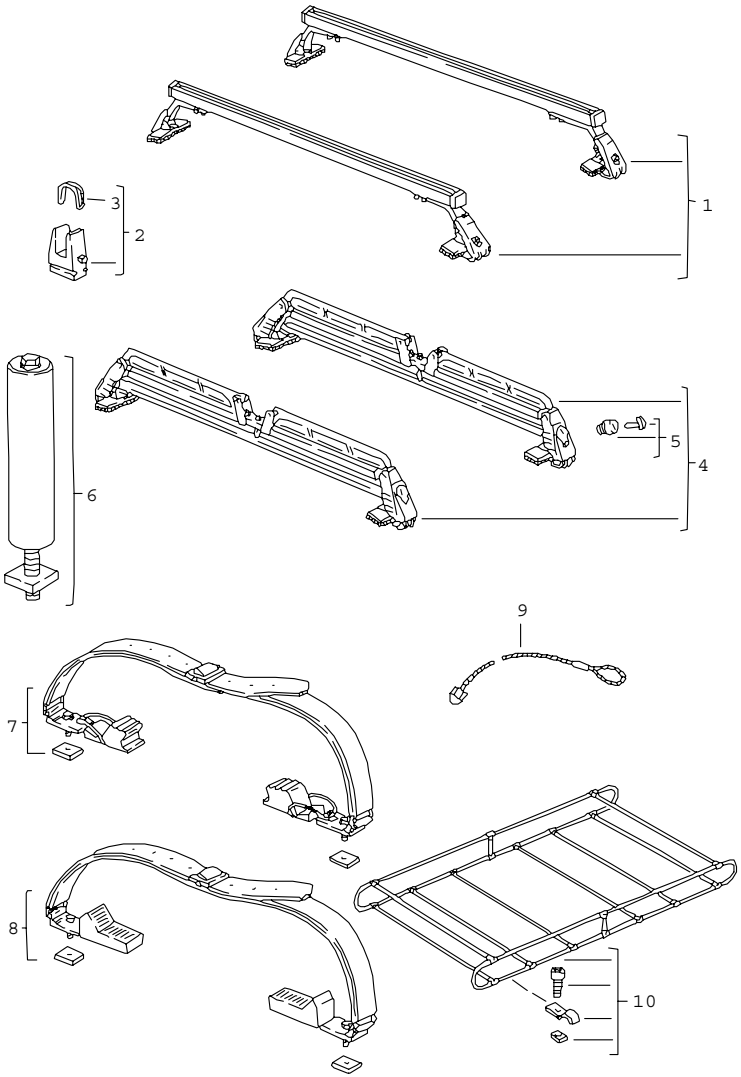

Pos	Part Number	Name	Remarks	Qty	Model
		roof transport system until 35 KG	-81		
1	477 091 033	set of main supports		1	
2	928 801 903 02	rubber support for skis 1 set		X	
3	E 928 801 193 02	retaining strap 1 set		X	
4	E 477 091 025 A	ski rack lockable		1	
5	928 801 011 02	cylinder lock with stipulated lock-no.		1	
6	E 928 801 085 02	ladder support mandrel		X	
7	E 928 801 019 02	set of surf board supports		1	
8	E 928 801 017 02	set - canoe carrier		1	
9	E 928 801 079 02	safety rope		1	
10	928 801 081 02	roof luggage rack		1	
		- -- E N D -- -			

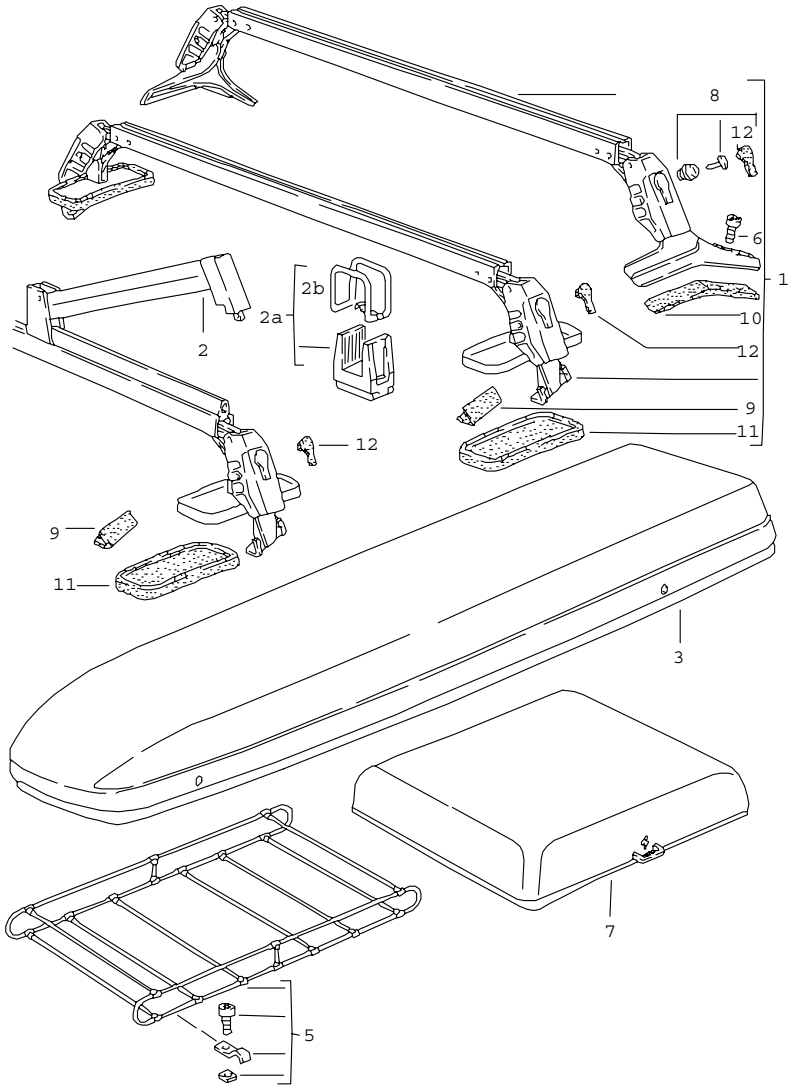

Pos	Part Number	Name	Remarks	Qty	Model
		roof transport system - I - until 75 KG	-81 82-		
1	E 944 801 005 00	set of main supports		1	
2	E 928 801 061 02	retaining strip 1 set		1	
2A	928 801 903 02	rubber support for skis 1 set		X	
2B	E 928 801 193 02	retaining strap 1 set		X	
3	E 928 801 063 02	ski box	/L	1	
(3)	E 928 801 064 02	ski box	/R	1	
5	928 801 081 02	roof luggage rack		1	
6	999 119 012 07	pan-head screw		4	
7	E 928 801 073 02	box for suitcase		1	
8	928 801 011 02	cylinder lock with stipulated lock-no.		1	
9	E 477 091 145	protection cap		2	
10	477 091 151	insert	/L	1	
(10)	477 091 152	insert	/R	1	
10	477 091 151 A	protective rubber	/L	1	
(10)	477 091 152 A	protective rubber	/R	1	
11	928 801 267 02	rubber plate front		2	
12	928 801 111 02	protection cap for lock		4	
13	928 801 107 02	cover	/V	2	
14	944 801 901 01	parts kit	/V	X	
15	944 801 901 00	parts kit	/V	X	
		- -- E N D -- -			

Model	Year	MG	SG	Illustration	Restrictions	Update				
924	85	0	02	2-07		187	11:42	06.04.2005	PORSCHE	PET	PORSCHE

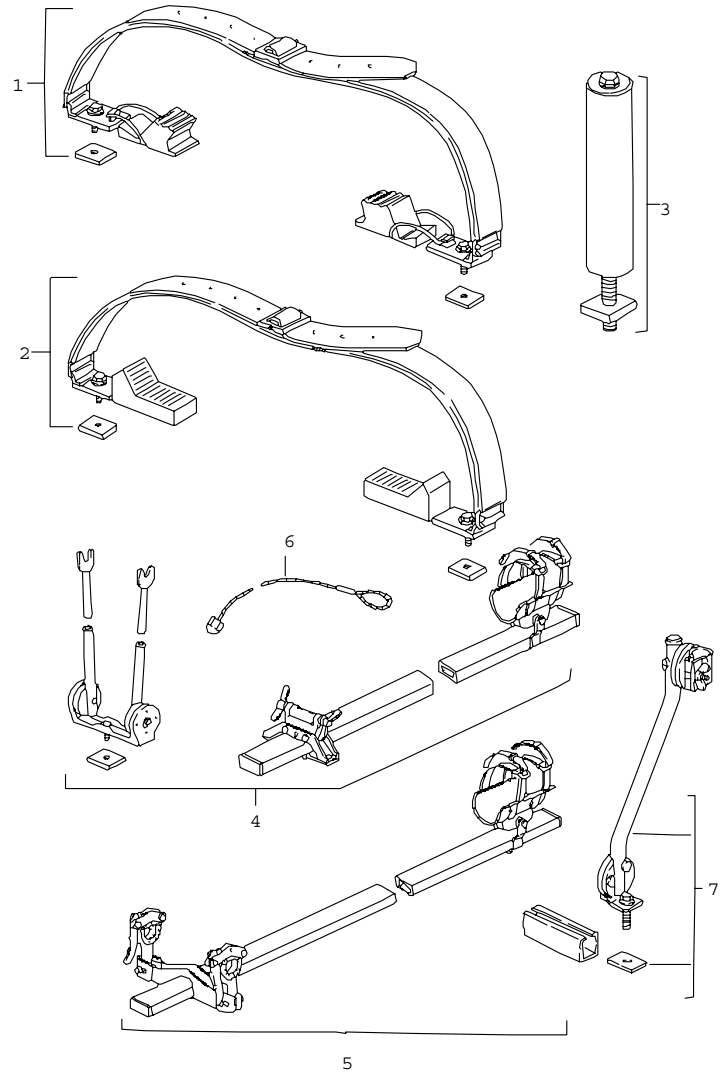

Pos	Part Number	Name	Remarks	Qty	Model
		roof transport system - II - until 75 KG	-81 82-		M 388
1	E 928 801 019 02	set of surf board supports		1	
2	E 928 801 017 02	set - canoe carrier		1	
3	E 928 801 085 02	ladder support mandrel		X	
4	E 928 801 093 02	set - bike carrier racing bike		1	
5	E 928 801 095 02	set - bike carrier standard bike		1	
6	E 928 801 079 02	safety rope for anti-theft protection		1	
7	E 928 801 097 02	support for bicycle		1	
		- -- E N D -- -			

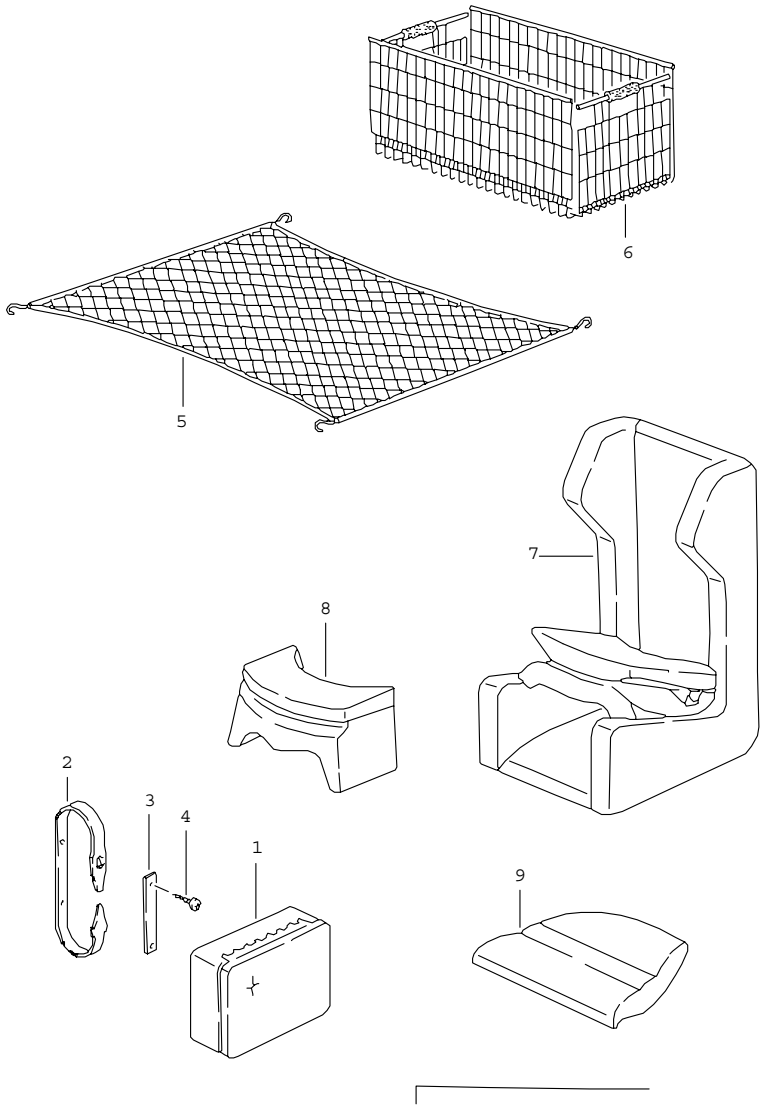

Pos	Part Number	Name	Remarks	Qty	Model
		accessories			
1	E 928 722 041 02	first-aid kit		1	
2	171 860 273	retaining strap first-aid kit		1	
3	171 860 269	retaining bracket first-aid kit		1	
4	900 145 035 02	counters. head tapp. screw 4,2 X 16		2	
5	477 863 539	luggage net		1	
6	E 000 043 002 00	car basket		1	
7	944 522 051 01	child car seat up to 6 years		1	
8	928 522 050 00	child car seat older than 4 years only together with child car seat cushion		1	
9	944 522 159 00	child car seat cushion	/L	1	
	4CR	black porsche lettering cloth			
(9)	944 522 160 00	child car seat cushion	/R	1	
	4CR	black porsche lettering cloth			
		- -- E N D -- -			

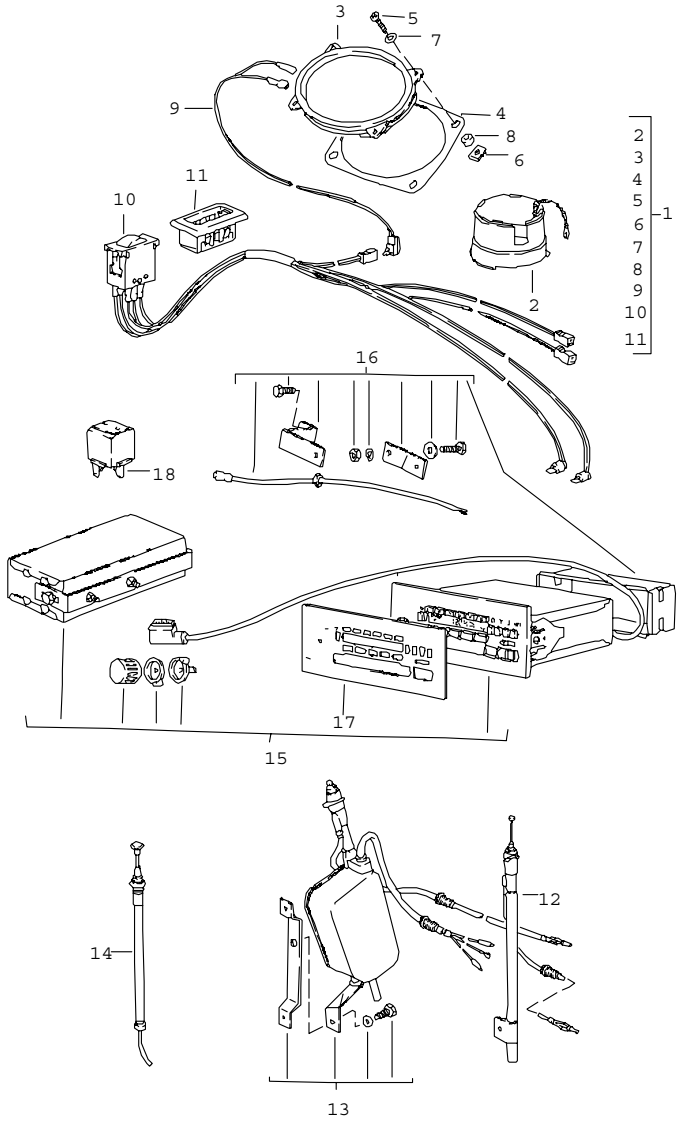

Pos	Part Number	Name	Remarks	Qty	Model
		radio with 3 loudspeaker	-82		
(1)	E 477 035 907	set installation parts radio F >>92A04 15902 F >>93A01 41292 comprising:		1 X	
2	477 905 209 C	screening ring		1	
3	944 645 451 00	loudspeaker rear right 4 OHM		1	
(3)	E 477 035 411 C	loudspeaker rear left and front 8 OHM		2	
4	477 035 999	gasket loudspeaker rear		2	
5	N 013 962 2	tapping screw B 3,9 X 16		12	
6	999 507 071 00	speed nut B 3,9 X 11,6		12	
7	900 151 028 02	washer 4,1		12	
8	477 035 375	bush		8	
(9)	E 477 035 440 A	cable for loudspeaker rear right		1	
(9)	E 477 035 441	cable for loudspeaker rear left and front		1	

Pos	Part Number	Name	Remarks	Qty	Model
1	E 477 035 908	set installation parts radio with fader F 92A04 15903>> F 93A01 41293>> comprising:		1 X	
2	477 905 209 C	screening ring		1	
3	944 645 451 00	loudspeaker		3	
4	477 035 999	gasket loudspeaker rear		2	
5	N 013 962 2	tapping screw B 3,9 X 16		12	
6	999 507 071 00	speed nut B 3,9 X 11,6		12	
7	900 151 028 02	washer 4,1		12	
8	477 035 375	bush		8	
9	E 477 035 440	cable for loudspeaker front		1	
(9)	E 477 035 440 A	cable for loudspeaker rear right		1	
(9)	E 477 035 440 B	cable for loudspeaker rear left		1	
10	477 035 465	fader with lines		1	
11	477 035 463 A	rose for fader		1	
12	477 035 503 A	antenna manual		1	924/TURBO
(12)	E 477 035 503 C	antenna black manual		1	GT
13	> 944 645 911 00	automatic antenna		1	924/TURBO
13	944 645 911 00	automatic antenna	85-	1	
14	944 645 913 00	antenna rod for automatic antenna 944.645.911.00		1	
13	E 477 035 510 A	automatic antenna for		1	GT
14	477 035 513	antenna rod for automatic antenna		1	
		car radio			
15	E 477 035 105	radio BAMBERG DIGITAL SUPERARIMAT "DE"		1	(CH),(D),(A)
16	E 477 035 619	installation set	-81	1	
16	E 477 035 619	installation set	82-	1	
17	477 035 915	cover		1	(CH),(D),(A)
(15)	E 477 035 108	radio BAMBERG DIGITAL RW		1	
16	E 477 035 619	installation set	-81	1	
(17)	477 035 917	cover		1	
(15)	E 477 035 165	radio COBURG STEREO CR SUPERARIMAT		1	(CH),(D),(A)
(16)	E 477 035 617	installation set		1	
(15)	E 477 035 164	radio COBURG STEREO CR		1	
(16)	E 477 035 617	installation set		1	
18	321 919 505	relay		1	
		- -- E N D -- -			

Model	Year	MG	SG	Illustration	Restrictions	Update				
924	85	0	03	3-05		187	11:42	06.04.2005	PORSCHE	PET	PORSCHE

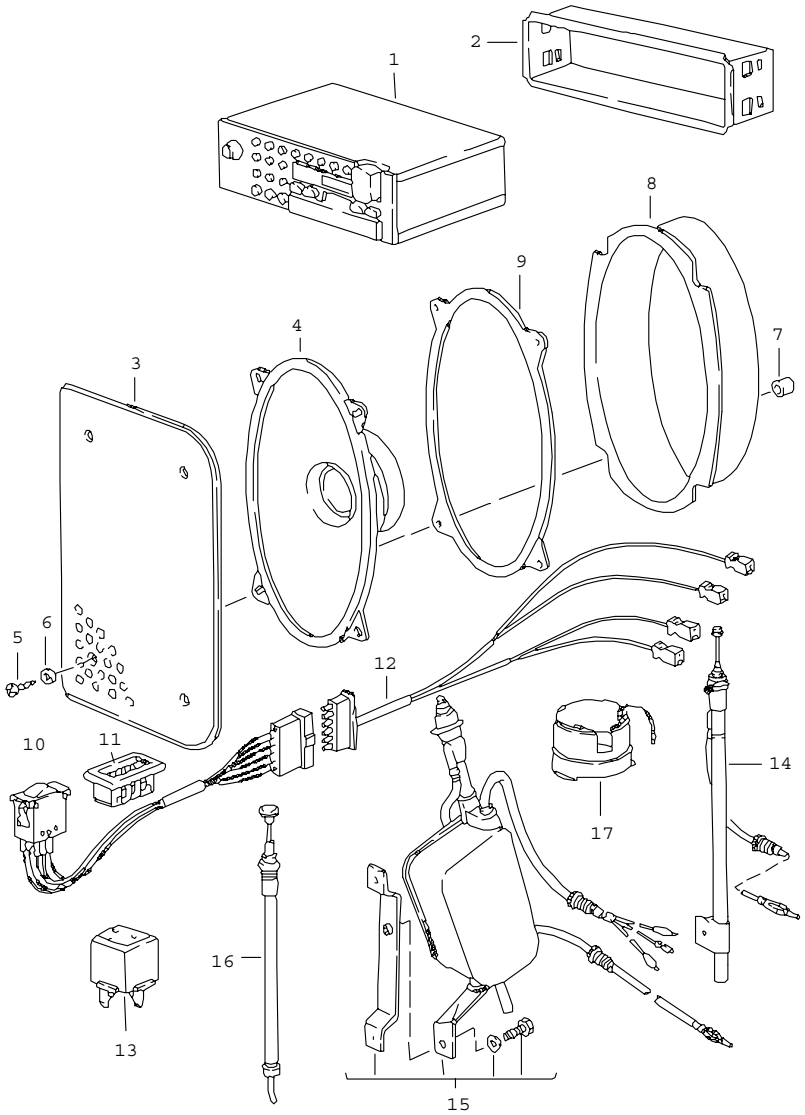

Pos	Part Number	Name	Remarks	Qty	Model
		radio with 4 loudspeaker	83-		
1	> 911 645 106 00	radio KOELN SQR ARI	-83	1	(D),(A),(CH)
(1)	E 911 645 106 01	radio KOELN SQR ARI	84-	1	(D),(A),(CH)
1	> 911 645 147 00	radio ATLANTA SQR	-83	1	
(1)	> 911 645 147 01	radio ATLANTA SQR	84-	1	
-	911 645 157 00	radio HAMBURG SQM 24	85-	1	(D),(A),(CH)
-	E 911 645 158 00	radio BOSTON SQM 23	85-	1	
2	911 645 173 02	retaining frame		1	
3	477 867 081	loudspeaker grille	/V	2	
	01C	black			
	89S	brown			
4	911 645 411 00	loudspeaker		4	
5	900 145 041 07	tapping screw	/V	8	
(5)	N 013 962 2	tapping screw 3,9 X 16	/H	8	
6	900 151 028 02	washer	/H	8	
7	477 867 373	bush	/V	8	
(7)	477 035 375	bush	/H	8	
8	944 645 015 00	water protection	/V	2	
9	477 035 999	gasket	/H	2	
10	477 035 465 A	fader		1	
11	477 035 463 A	rose		1	
12	E 477 035 440 C	wiring harness loudspeaker		1	
13	321 919 505	relay		1	

Pos	Part Number	Name	Remarks	Qty	Model
(13)	944 615 103 00	switch unit radio	84-	1	
14	477 035 503 A	antenna manual		1	
15	> 944 645 911 00	automatic antenna		1	
16	477 035 513	antenna rod for automatic antenna		1	
17	477 905 209 C	screening ring		1	
		- -- E N D -- -			

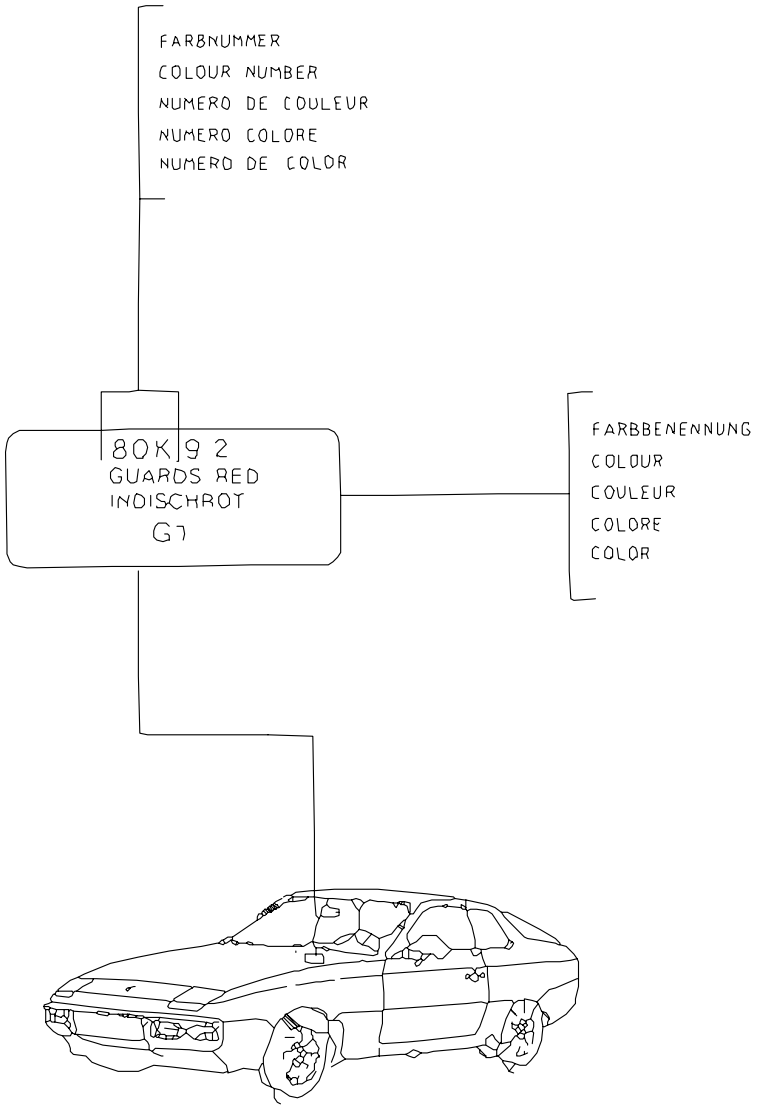

Pos	Part Number	Name	Remarks	Qty	Model
		lacquers basic materials			
-	911 096 050 00	polyester filler 1 KG GLASSIT-NON-FERRO		X	
-	911 096 051 00	hardener 30 GR GLASSIT red		X	
-	911 096 052 00	primer filler 1 LTR GLASSOFIX		X	
-	911 096 053 00	hardener 500 ML GLASSOFIX		X	
-	911 096 054 00	primer filler 1 LTR GLASSODUR white		X	
-	911 096 055 00	hardener 500 ML GLASSODUR		X	
-	911 096 056 00	wash primer GLASSOFIX 2K		X	
-	911 096 057 00	hardener 1 LTR GLASSOFIX		X	
-	911 096 058 00	polyurethane plastic putty		X	
-	911 096 059 00	hardener 1 KG		X	
-	911 096 060 00	thinner 1 LTR		X	
-	911 096 061 00	hardener 500 ML		X	
-	911 096 062 00	additional lacquer 1 LTR		X	
-	911 096 063 00	underbody protection 1 KG		X	
-	E L 016 006	nitro-cellulose thinner 2,5 L		X	

Pos	Part Number	Name	Remarks	Qty	Model
-	E 000 043 001 00	tin SN 90 % CA 200 G		X	
		acrylic lacquer metallic 1L			
-	ALD 645 97A	diamond silver metallic		X	97A
-	LKL 0Y7 V00	dolomite grey		X	Y7V
-	ALD 645 Z7Z	gemini grey metallic		X	Z7Z
-	ALD 645 B7V	graphite metallic		X	B7V
-	ALD 645 A5Y	helios blue metallic		X	A5Y
-	LKL 094 A00	inari silver metallic		X	94A
-	LKL 0A3 V00	indiana red metallic		X	A3V
-	ALD 645 A1Y	KALAHARI-METALLIC		X	A1Y
-	ALD 645 A6V	lhasa metallic		X	A6V
-	ALD 645 Y7Z	meteor metallic		X	Y7Z
-	ALD 645 Y9V	montego black metallic		X	Y9V
-	ALD 645 B8Z	MAHAGONI-METALLIC		X	B87
-	ALD 645 D6V	ONYX-METALLIC		X	D6V
-	ALD 645 Y5V	SAPHIR-METALLIC		X	Y5V
-	ALD 645 Y4V	SATURN-METALLIC		X	Y4V
-	ALD 645 D3V	sienna red metallic		X	D3V
-	ALD 645 A3Y	surinam metallic		X	A3Y
-	ALD 645 Y7U	stone grey metallic		X	Y7U
-	ALD 645 Y7Y	zermatt silver metallic		X	Y7Y
-	ALD 645 Y8V	sable brown metallic		X	Y8V
-	911 095 903 80	synthetic resin prime coat metallic		X	
	822	garnet red metallic			822
	30T	light blue metallic			M5Z
	966	light bronze metallic			M1V
	33N	crystal green metallic			M3Y
	304	MINERVABLAU-METALLIC			M5Y
	20C	moss green metallic			M6V
	376	PETROLBLAU-METALLIC			M5V
	655	platinum-metallic			M8U
	810	ruby red metallic			
	708	black-metallic			M9Y
	956	zinc metallic			M7V
-	911 096 064 00	clear lacquer 1L GLASSODUR-MS 923-85		X	
		final acrylic lacquer 1L			
-	LKL 0Y5 B00	copenhagen blue		X	L Y5B
-	LKL 030 C00	malaga red		X	L 30C
-	LKL 0E1 M00	mexico beige		X	L E1M
-	LKL 0A5 D00	monaco blue		X	L A5D
-	LKL 0Y1 L00	pasadena yellow		X	L Y1L
-	ALN 769 90E	alpine white		X	L 90E
-	ALN 769 Y4A	amethyst		X	L Y4A
-	ALN 769 A1M	colorado beige		X	L A1M
-	ALN 769 Y7A	gabon grey		X	L Y7A
-	ALN 769 A3B	gambia red		X	L A3B
-	ALN 769 D8A	HAVANNABRAUN		X	L D8A
-	ALN 769 30C	malaga red		X	L 30C
-	ALN 769 Y5A	mauritius blue		X	L Y5A
-	ALN 769 E1M	mexico beige		X	L E1M
-	ALN 769 A5D	monaco blue		X	L A5D
-	ALN 769 041	black		X	L 041
-	ALN 769 B6A	sunda green		X	L B6A
-	ALN 769 Y3B	venus red		X	L Y3B
-	911 095 902 60	final acrylic lacquer		X	

Pos	Part Number	Name	Remarks	Qty	Model
	601	flieder			L M7A
	027	guards red			L M3A
	451	mocha black			451
	536	pastel beige			L M1N
	700	black			L 041
		paint touch-up applicator			
-	L 090 E01	alpine white		X	L 90E
-	E L 0Y4 A01	amethyst		X	L Y4A
-	L 0Y7 A01	gabon grey		X	L Y7A
-	E L 0A3 B01	gambia red		X	L A3B
-	E L 0D8 A01	HAVANNABRAUN		X	L D8A
-	E L 0Y5 B01	copenhagen blue		X	L Y5B
-	E L 030 C01	malaga red		X	L 30C
-	E L 0Y5 A01	mauritius blue		X	L Y5A
-	E L 0E1 M01	mexico beige		X	L E1M
-	E L 0A5 D01	monaco blue		X	L A5D
-	E L 0Y1 L01	pasadena yellow		X	L Y1L
-	E L 0B6 A01	sunda green		X	L B6A
-	E L 0Y3 B01	venus red		X	L Y3B
-	911 095 932 20	paint touch-up applicator		X	
	601	flieder			L M7A
	027	guards red			L M3A
	451	mocha black			L M9V
	536	pastel beige			L M1N
	700	black			L 041
		paint touch-up applicator set comprising: paint touch-up applicator top-coat paint paint touch-up applicator clear lacquer			

Pos	Part Number	Name	Remarks	Qty	Model
-	E L 097 A02	diamond silver metallic		X	97A
-	E L 0Y7 V02	dolomite grey		X	Y7V
-	E L 0Z7 Z02	gemini grey metallic		X	Z7Z
-	E L 0B7 V02	graphite metallic		X	B7V
-	E L 0A5 Y02	helios blue metallic		X	A5Y
-	E L 094 A02	inari silver metallic		X	94A
-	E L 0A3 V02	indiana red metallic		X	A3V
-	E L 0A6 V02	lhasa metallic		X	A6V
-	E L 0A1 Y02	KALAHARI-METALLIC		X	A1Y
-	E L 0Y7 Z02	meteor metallic		X	Y7Z
-	E L 0Y9 V02	montego black metallic		X	Y9V
-	E L 0D6 V02	ONYX-METALLIC		X	D6V
-	E L 0Y5 V02	SAPHIR-METALLIC		X	Y5V
-	E L 0Y4 V02	SATURN-METALLIC		X	Y4V
-	E L 0D3 V02	sienna red metallic		X	D3V
-	E L 0A3 Y02	surinam metallic		X	A3Y
-	E L 0Y7 U02	stone grey metallic		X	Y7U
-	L 0Y7 Y02	zermatt silver metallic		X	Y7Y
-	E L 0Y8 V02	sable brown metallic		X	Y8V
-	911 095 933 20	paint touch-up applicator		X	
	655	platinum-metallic			
	708	black-metallic			
	822	garnet red metallic			M6Y
	33N	crystal green metallic			M3Y
	966	light bronze metallic			M1V
	304	MINERVABLAU-METALLIC			M5Y
	20C	moss green metallic			M6V
	956	zinc metallic			M7V
	30T	light blue metallic			

Pos	Part Number	Name	Remarks	Qty	Model	Pos	Part Number	Name	Remarks	Qty	Model
	376	PETROLBLAU-METALLIC									
		- -- E N D -- -									

Model	Year	MG	SG	Illustration	Restrictions	Update		
924	85	0	05	5-00		187	11:43	06.04.2005

Pos	Part Number	Name	Remarks	Qty	Model
		securing liquid sealing compound preservative agent			
		securing liquid			
-	928 101 921 00	loctite -270- 10 CCM high strength		X	
-	000 043 012 00	loctite -221- 10 CCM low strength		X	
		sealing compound			
-	000 043 010 00	loctite -574- 50 CCM		X	
-	000 043 011 00	loctite -638- 10 CCM for balance shaft		X	
-	E 000 043 013 00	loctite adhesive remover -80646- spraying can		X	
-	E AMV 176 000 05	adhesive sealing compound 310 CCM		1	
		loctite for pasting metal glass ceramics thermoset plastic adhesive set comprising:		X	
-	000 043 051 00	adhesive loctite -317- 50 CCM		X	
-	000 043 202 65	loctite AKTIVATOR NF 736 180 CCM		X	
-	000 043 019 01	sealing compound SILASTIK 730 RTV 90 CCM		X	
-	000 043 004 00	mounting paste optimoly ht 1 90-g tube		X	

Model	Year	MG	SG	Illustration	Restrictions	Update		
924	85	0	05	5-00		187	11:43	06.04.2005

Pos	Part Number	Name	Remarks	Qty	Model
-	000 043 020 00	optimoly mounting paste OPTIMOLY - TA 1 tube 100 g silver		X	
-	000 043 110 01	grease OPTITEMP PU35 1 tube 100 g		X	
-	000 043 204 21	grease for lock cylinder spraying can preservative agent		X	
-	E 999 571 062 00	care kit comprising: suitcase		1	
-	E 999 901 013 40	liquid preservative		1	
-	999 901 014 41	cleaning agents		1	
-	E 999 901 015 40	polisher		1	
-	E 999 901 016 40	tar remover		1	
-	E 999 901 017 40	dashboard cleaner		1	
-	E 999 901 018 40	paint polish		1	
-	999 901 019 41	insect remover		1	
-	E 999 901 020 40	spot remover		1	
-	999 901 021 40	polishing cotton		1	
-	E 999 901 022 40	polishing cloth		1	
-	000 044 000 02	preservative agent 250 ML		X	
-	999 901 017 41	window cleaner summer 250 ML		X	
-	E 999 901 033 40	window cleaner winter 1000 ML		X	
-	E 999 901 036 40	car shampoo refilling bottle 1000 ML		X	
-	999 917 803 00	window cleaner spray bottle 250 ML		X	
-	928 628 931 00	silicone remover 1000 ML		X	

Model	Year	MG	SG	Illustration	Restrictions	Update		
924	85	0	05	5-00		187	11:43	06.04.2005

Pos	Part Number	Name	Remarks	Qty	Model
-	E 999 901 030 40	rim cleaner spray bottle 500 ML		X	
-	999 901 031 40	rim cleaner refilling bottle 1000 ML		X	
		- -- E N D -- -			

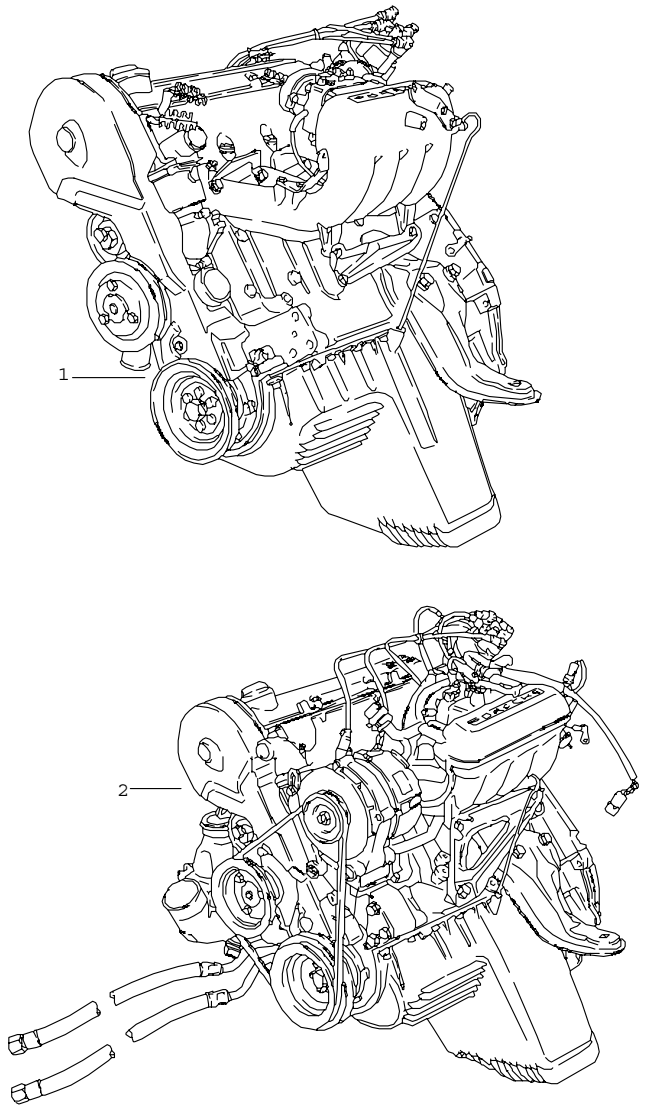

Pos	Part Number	Name	Remarks	Qty	Model
		replacement engine M>>65X12345			XK XJ TURBO M31.01 M31.03 M31.50
1	E 047 100 015 F	replacement engine 92 KW (125 DIN-PS) for M 062 use also: 056.129.777	/LL	1	924 XK
(1)	047 100 015 G	replacement engine 92 KW (125 DIN-PS)	/LL	1	924 XK AUT.
	001	M >> XK 04 9526			
	002	M XK 04 9527 >>			
		for M62 use also: 056.129.777			
(1)	A 047 100 015 R	replacement engine 92 KW (125 DIN-PS) for M479 use also: 047.131.013 A	/RL	1	924 XJ
(1)	047 100 015 S	replacement engine 92 KW (125 DIN-PS)	/RL	1	924 XJ AUT.
	001	M >> XJ 00 6058			
	002	M XJ 00 6059 >>			
2	A 931 100 201 00	replacement engine 125 KW (170 DIN-PS)	/LL 80	1	TURBO M31.01
(2)	A 932 100 001 00	replacement engine 125 KW (170 DIN-PS)	/RL 80	1	TURBO M31.01
(2)	A 931 100 203 00	replacement engine 130 KW (177 DIN-PS)	/LL 81-	1	TURBO M31.03
(2)	A 931 100 021 05	replacement engine 130 KW (177 DIN-PS)	/LL 81-	1	TURBO M31.03 (S)
(2)	932 100 021 00	replacement engine 130 KW (177 DIN-PS)	/RL 81-	1	TURBO M31.03
(2)	A 932 100 021 01	replacement engine 130 KW (177 DIN-PS)	/RL 81-	1	TURBO M31.03 (AUS)

Pos	Part Number	Name	Remarks	Qty	Model	Pos	Part Number	Name	Remarks	Qty	Model
(2)	> 931 100 250 00	replacement engine 154 KW (210 DIN-PS)	/LL 81	1	GT M31.50						
(2)	A 932 100 021 02	replacement engine 154 KW (210 DIN-PS)	/RL 81	1	GT M31.50						
		- -- E N D -- -									

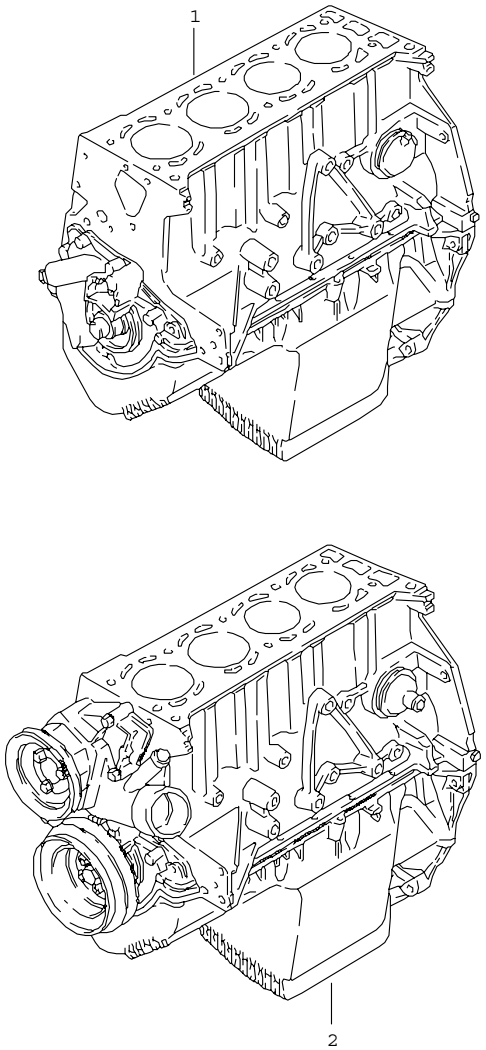

Pos	Part Number	Name	Remarks	Qty	Model
		short engine			
		short engine with crankshaft piston oil pump			
1	> 047 100 103 F	short engine 92 KW (125 DIN-PS) for MOD.80/81 use also: 052.103.129.A		1	924 XJ XK
		short engine with crankshaft piston oil pump water pump			
2	> 047 100 031	short engine 125 KW (170 DIN-PS)	80	1	TURBO M31.01
2	> 047 100 031 B	short engine 130 KW (177 DIN-PS)	81-	1	TURBO M31.03
2	E 047 100 031 D	short engine 154 KW (210 DIN-PS)	81	1	GT M31.50
		- -- E N D -- -			

Model	Year	MG	SG	Illustration	Restrictions	Update	11:44	06.04.2005	PORSCHE	PET	PORSCHE
924	85	1	01	101-10		187					

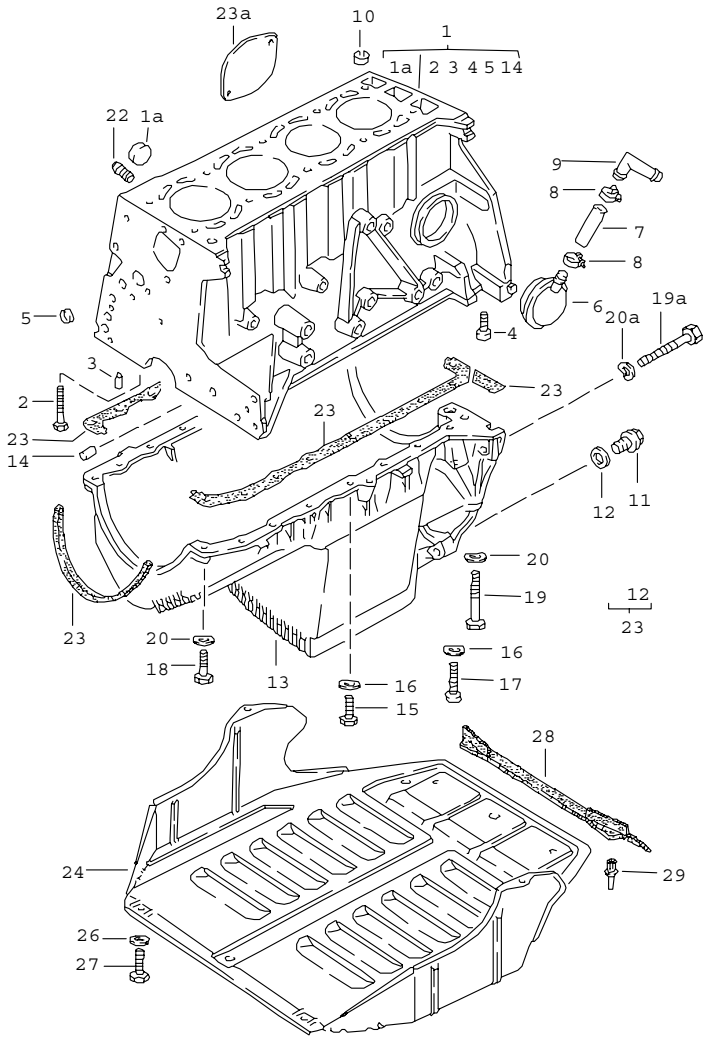

Pos	Part Number	Name	Remarks	Qty	Model
		cylinder block with pistons oil pan protective plate f. engine			
1	> 047 103 101 E	cylinder block with pistons MOD. 80/81 use also: 052.103.129.A		1	XK XJ
1	> 047 103 101 D	cylinder block with pistons	80	1	M31.01/02
1	> 931 103 101 00	cylinder block with pistons	81-	1	M31.03
1	> 931 103 101 01	cylinder block with pistons	81	1	M31.50
1A	059 103 113	cover		5	
2	E N 010 488 3	hexagon-head bolt M 12 X 85		10	
3	999 012 034 00	straight pin 8 H 6 X 12		10	
4	N 014 724 3	pan-head screw M 10 X 20		2	
5	N 011 903 3	cover 16		2	
5	N 011 907 4	cover 14		1	
6	052 103 129 A	bleeder	-81	1	XJ XK
(6)	931 107 063 00	bleeder		1	VC TURBO/GT
(6)	931 107 063 00	bleeder	82-	1	XJ XK
-	N 020 343 1	hose 18 X 2,5		*	
7	-	40 MM		1	XJ XK
8	999 512 346 00	hose clamp LC 16-25		2	XJ XK VC
9	047 103 227	elbow		1	XJ XK
(9)	477 133 203	elbow		1	XJ XK (AUS)
10	046 103 139	tensioning sleeve		2	

Pos	Part Number	Name	Remarks	Qty	Model
11	059 103 193	screw plug M 26 X 1,5		1	
(11)	N 902 889 01	screw plug M 14 X 1,5		1	
12	* N 043 854 1	sealing ring C 26 X 32		1	
(12)	900 123 007 30	sealing ring A 14 X 18		1	
13	047 103 603 A	oil pan use also: 047.103.635		1	XJ XK VC
(13)	047 103 603 B	oil pan use also: 047.103.635		1	TURBO GT
14	E N 043 207 2	straight pin 8 H 8 X 14		2	
15	N 014 703 2	pan-head screw M 6 X 18		13	
16	N 012 226 5	spring washer B 6		13	
17	N 014 722 2	pan-head screw M 6 X 60		2	
18	N 014 725 2	pan-head screw M 8 X 25		2	
19	N 100 113 01	pan-head screw M 8 X 140		1	
(19)	N 044 724 2	pan-head screw M 8 X 70		1	
19A	N 010 479 2	hexagon-head bolt M 10 X 88		2	
(19A)	N 010 490 3	hexagon-head bolt M 12 X 55		2	
(19A)	N 010 467 1	hexagon-head bolt M 12 X 45		4	
20	N 012 241 11	spring washer B 8		4	
20A	900 028 032 02	spring washer B 10		3	
(20A)	900 028 014 02	spring washer B 12		4	
22	059 115 721	union		1	924
23	* 060 198 041 A	set of seals for oil sump		1	
23A	931 101 131 00	cover protective plate f. engine		1	TURBO/GT
24	477 407 583 C	protective plate F >>92CN4 02197 F >>93CN1 00305		1	924/TURBO
(24)	944 341 161 03	protective plate F 92CN4 02198>> F 93CN1 00306>>		1	924/TURBO
(24)	477 407 583 D	protective plate		1	GT
26	900 151 003 02	washer 6,1		6	
27	N 010 215 13	hexagon-head bolt M 6 X 15		6	
28	477 407 587	protection cover F >>92CN4 02197 F >>93CN1 00305		1	TURBO/GT
29	N 038 549 1	expansion rivet A 8 X 12 F >>92CN4 02197 F >>93CN1 00305		2	TURBO/GT
		- -- E N D -- -			

Model	Year	MG	SG	Illustration	Restrictions	Update	11:44	06.04.2005	PORSCHE PET PORSCHE
924	85	1	02	102-00		187			

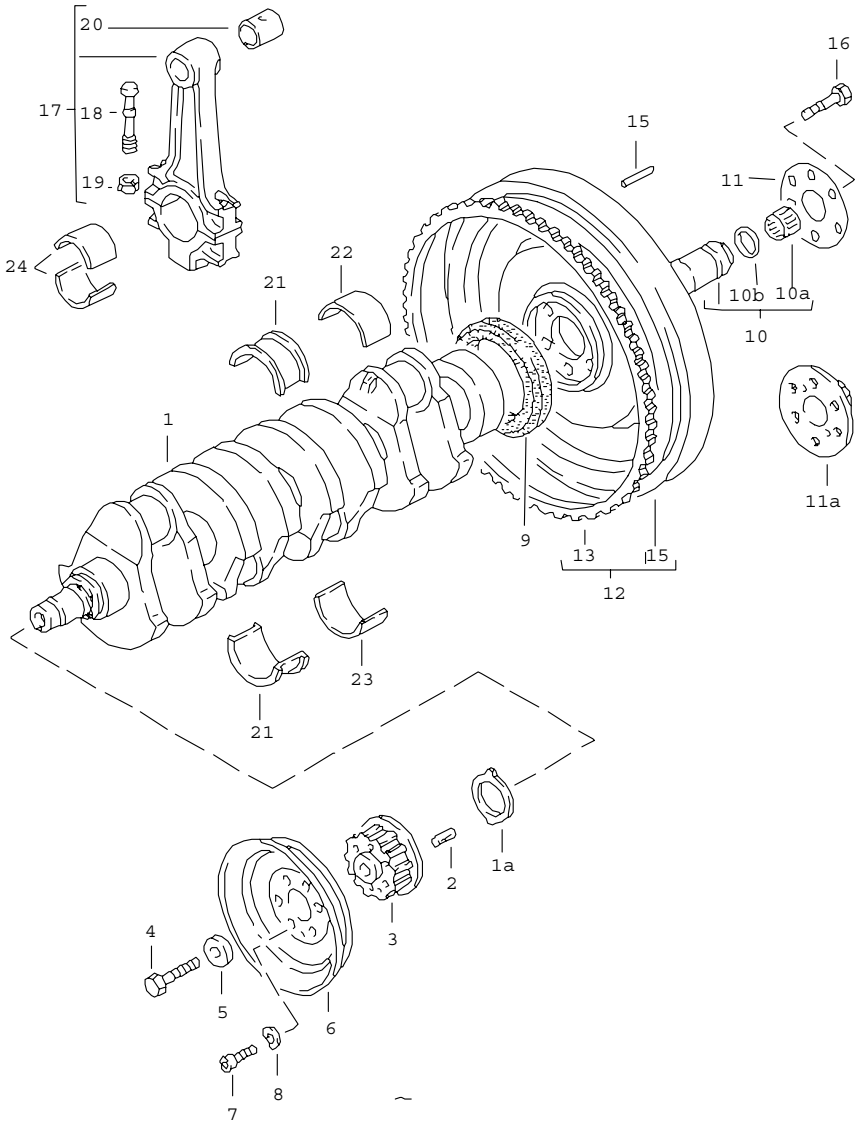

Pos	Part Number	Name	Remarks	Qty	Model
		crankshaft connecting rod			
1	> 046 105 021 A	crankshaft		1	
1A	046 105 177	driver		1	
2	N 023 255 1	tensioning sleeve 4 X 12		1	
3	048 105 209	toothed belt pulley		1	
4	N 900 074 01	hexagon-head bolt M 16 X 1,5 X 50		1	
5	048 105 235	washer		1	
6	048 105 255 A	v-belt pulley simple	/LL	1	924
(6)	046 105 255 B	v-belt pulley simple	/RL	1	924
(6)	046 105 255 F	v-belt pulley double		1	924
(6)	477 105 255	v-belt pulley triple		1	
7	N 014 725 2	pan-head screw M 8 X 25		6	
8	N 012 241 11	spring washer B 8 X 15		6	
9	* 059 103 051 D	sealing ring		1	
10	047 105 169 A	sleeve with needle-roller bearing		1	924
(10)	931 102 111 00	deep-groove ball bearing		1	TURBO
10A	047 105 313	needle-roller bearing		1	924
10B	047 105 311	shaft seal 15 X 21 X 5/7		1	924
11	046 105 175	washer		1	
11A	047 105 179	stop	AUT.	1	924
12	046 105 269 B	flywheel		1	924
(12)	931 102 205 05	flywheel only together with clutch plate 931.116.011.04	80	1	M31.01/02

Pos	Part Number	Name	Remarks	Qty	Model
(12)	931 102 206 01	flywheel only together with clutch plate 931.116.011.04	81-	1	M31.03/50
(12)	931 102 206 03	flywheel only together with clutch plate 944.116.012.04	81-	1	M31.03
13	046 105 275 A	starter ring		1	924
15	N 013 210 1	straight pin 6 M 6 X 16		3	924
16	N 040 110 1	hexagon-head bolt M 12 X 1,5 X 22		6	924
16	E 900 083 021 08	hexagon-head bolt M 12 X 1,5 X 20 only together with flywheel 931.102.205.05 931.102.206.01		6	M31.01/02/03 04/50
16	931 102 202 00	hexagon-head bolt M 12 X 1,5 X 18 only together with flywheel 931.102.206.03	81-	6	M31.03
		connecting rod			
17	* 046 198 401	connecting rod 1 set		1	
18	E 059 105 425 A	connecting rod bolt		8	
19	* 059 105 427 A	hexagon nut		8	
20	E 059 105 431	connecting rod bush		4	
		crankshaft bearing			
21	* 046 105 501	crankshaft bearing thrust bearing		2	
(21)	* 046 105 507	crankshaft bearing thrust bearing undersize 0,25 MM		X	
(21)	* 046 105 513	crankshaft bearing thrust bearing undersize 0,50 MM		X	
(21)	* 046 105 519	crankshaft bearing thrust bearing undersize 0,75 MM		X	
22	* 046 105 561	crankshaft bearing numbers 1,2,4,5 upper		4	
(22)	* 046 105 567	crankshaft bearing numbers 1,2,4,5 upper undersize 0,25 mm		X	
(22)	* 046 105 573	crankshaft bearing numbers 1,2,4,5 upper undersize 0,50 mm		X	
(22)	* 046 105 579	crankshaft bearing numbers 1,2,4,5 upper undersize 0,75 mm		X	
23	* 046 105 591	crankshaft bearing numbers 1,2,4,5 lower		4	
(23)	E 046 105 597	crankshaft bearing numbers 1,2,4,5 lower undersize 0,25 mm		X	
(23)	* 046 105 603	crankshaft bearing NR. 1, 2, 4, 5 lower undersize 0,50 mm		X	
(23)	* 046 105 609	crankshaft bearing NR. 1, 2, 4, 5 lower undersize 0,75 mm		X	
		connecting-rod bearing			
24	E 046 105 701	connecting-rod bearing		8	
(24)	E 046 105 707	connecting-rod bearing undersize 0,25 mm		X	
(24)	E 046 105 713	connecting-rod bearing undersize 0,50 mm		X	
(24)	* 046 105 719	connecting-rod bearing undersize 0,75 mm		X	
		- -- E N D -- -			

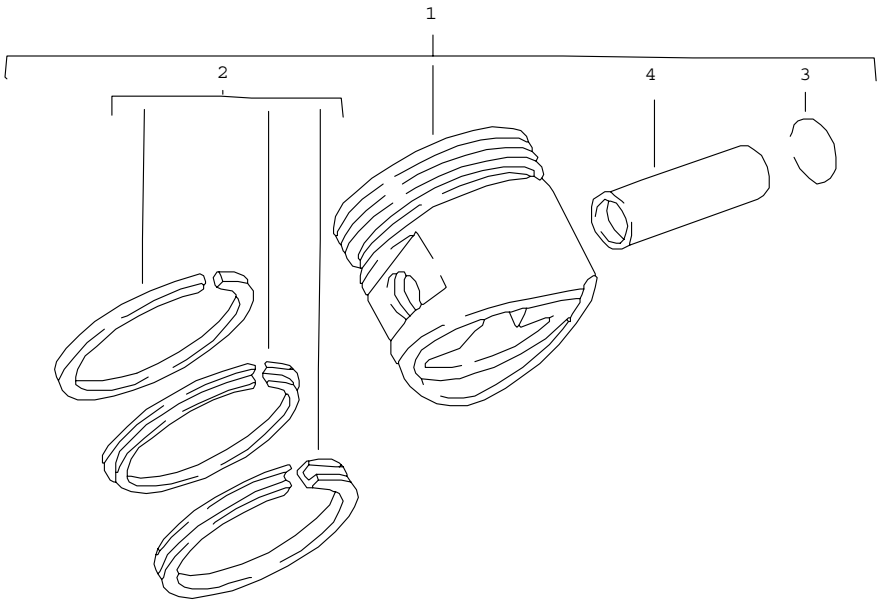

Pos	Part Number	Name	Remarks	Qty	Model
		piston piston rings			
1	047 107 065 F	piston		4	XJ XK
	001	86,48 MM			
	002	86,49 MM			
	003	86,50 MM			
1	047 107 071 F	piston oversize 86,75 MM		4	XJ XK
1	E 047 107 081 F	piston oversize 87,00 MM		4	XJ XK
1	047 107 091 F	piston oversize 87,50 MM		4	XJ XK
(1)	931 103 045 02	piston 86,50 MM MAHLE size 1	80	4	M31.01/02
(1)	E 931 103 045 12	piston 86,50 MM MAHLE size 2	80	4	M31.01/02
(1)	E 931 103 045 22	piston 86,50 MM MAHLE size 3	80	4	M31.01/02
(1)	931 103 051 01	piston 86,50 MM MAHLE size 1	81-	4	M31.03
(1)	931 103 051 11	piston 86,50 MM MAHLE size 2	81-	4	M31.03
(1)	931 103 051 21	piston 86,50 MM MAHLE size 3	81-	4	M31.03
(1)	931 103 051 01	piston 86,50 MM MAHLE size 1	81-	4	M31.03

Pos	Part Number	Name	Remarks	Qty	Model
(1)	931 103 051 11	piston 86,50 MM MAHLE size 2	81-	4	M31.03
(1)	931 103 051 21	piston 86,50 MM MAHLE size 3	81-	4	M31.03
(1)	931 103 042 01	piston 86,50 MM - KS - size 1	81	4	M31.50
(1)	E 931 103 042 11	piston 86,50 MM - KS - size 2	81	4	M31.50
(1)	E 931 103 042 21	piston 86,50 MM - KS - size 3	81	4	M31.50
(1)	E 931 103 045 51	piston 86,75 MM MAHLE size 1	80	4	M31.01/02
(1)	931 103 045 52	piston 86,75 MM MAHLE size 2	80	4	M31.01/02
(1)	E 931 103 045 53	piston 86,75 MM MAHLE size 3	80	4	M31.01/02
(1)	931 103 052 01	piston 86,75 MM MAHLE size 1	81-	4	M31.03
(1)	931 103 052 11	piston 86,75 MM MAHLE size 2	81-	4	M31.03
(1)	E 931 103 052 21	piston 86,75 MM MAHLE size 3	81-	4	M31.03
(1)	E 931 103 062 01	piston 86,75 MM - KS - size 1	81	4	M31.50
(1)	E 931 103 062 11	piston 86,75 MM - KS - size 2	81	4	M31.50
(1)	E 931 103 062 21	piston 86,75 MM - KS - size 3	81	4	M31.50
(1)	931 103 045 61	piston 87,00 MM MAHLE size 1	80	4	M31.01/02
(1)	E 931 103 045 62	piston 87,00 MM MAHLE size 2	80	4	M31.01/02
(1)	E 931 103 045 63	piston 87,00 MM MAHLE size 3	80	4	M31.01/02
(1)	931 103 055 01	piston 87,00 MM MAHLE size 1	81-	4	M31.03
(1)	931 103 055 11	piston 87,00 MM MAHLE size 2	81-	4	M31.03
(1)	E 931 103 055 21	piston 87,00 MM MAHLE size 3	81-	4	M31.03
(1)	E 931 103 063 01	piston 87,00 MM - KS - size 1	81	4	M31.50
(1)	E 931 103 063 11	piston 87,00 MM - KS - size 2	81	4	M31.50

Pos	Part Number	Name	Remarks	Qty	Model
(1)	E 931 103 063 21	piston 87,00 MM - KS - size 3	81	4	M31.50
2	* 060 198 151	set of piston rings 86,50 MM		4	XJ XK VC
2	* 060 198 153	set of piston rings 86,75 MM		4	XJ XK VC
2	* 060 198 155	set of piston rings 87,00 MM		4	XJ XK VC
2	* 931 103 901 00	set of piston rings 86,50 MM	80	4	M31.01/02
2	E 931 103 901 01	set of piston rings 86,50 MM	81-	4	M31.03/04/50
2	* 931 103 901 25	set of piston rings 86,75 MM	80	4	M31.01/02
2	* 931 103 901 26	set of piston rings 86,75 MM	81-	4	M31.03/04/50
2	* 931 103 901 50	set of piston rings 87,00 MM	80	4	M31.01/02
2	E 931 103 901 51	set of piston rings 87,00 MM	81-	4	M31.03/04/50
2	E 931 103 901 75	set of piston rings 87,50 MM	80	4	M31.01/02
2	* 931 103 901 76	set of piston rings 87,50 MM	81-	4	M31.03/04/50
3	N 012 277 1	snap ring		8	
4	E 046 107 411	piston pin		4	XJ XK VC
4	E 931 103 407 00	piston pin MAHLE		4	TURBO
4	E 931 103 407 01	piston pin - KS -		4	GT
		- -- E N D -- -			

Model	Year	MG	SG	Illustration	Restrictions	Update	11:45	06.04.2005	PORSCHE	PET	PORSCHE
924	85	1	03	103-00		187					

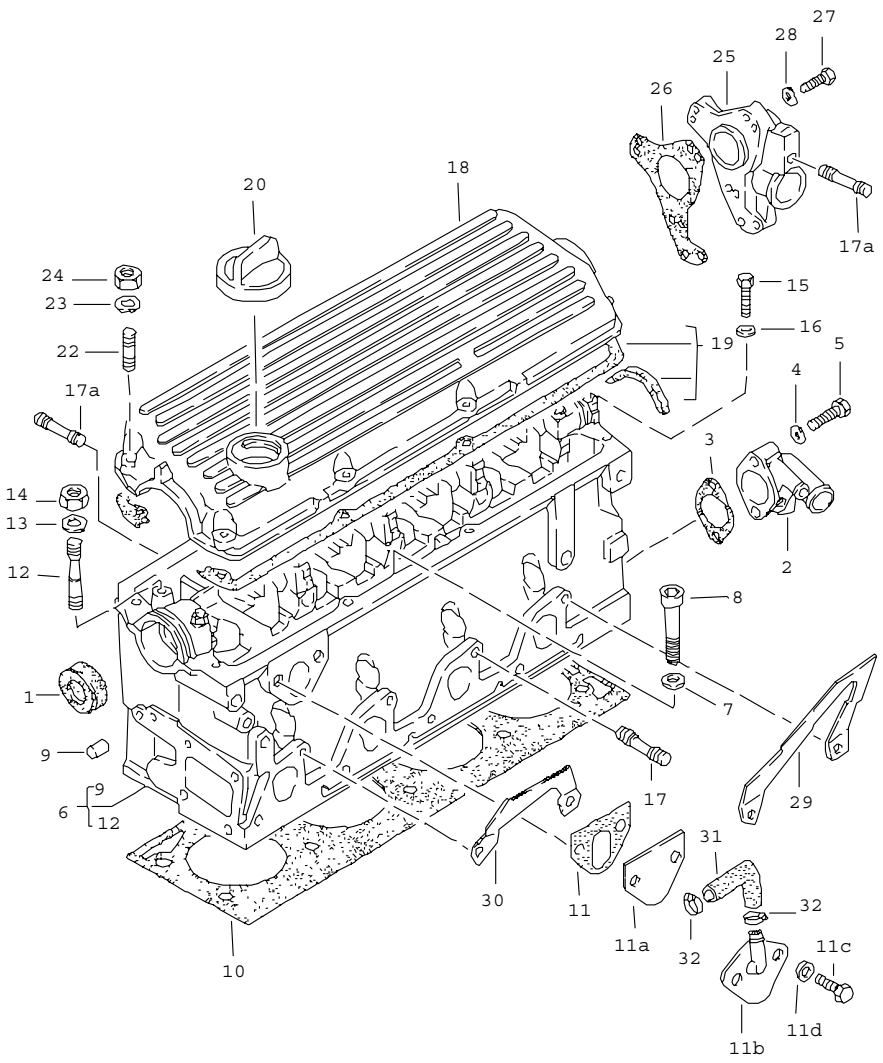

Pos	Part Number	Name	Remarks	Qty	Model
		cylinder head			
1	* 068 103 085 A	sealing ring		1	
2	047 103 093 B	flange		1	
3	052 121 091 A	gasket		1	
4	N 012 226 5	spring washer A 6		2	
5	N 010 221 3	hexagon-head bolt M 6 X 35		2	
(5)	900 074 151 02	hexagon-head bolt M 6 X 38		1	TURBO/GT
6	> 047 103 353 C	cylinder head		1	XJ XK VC
(6)	931 104 901 03	cylinder head for MOD.80,81 use also: 047.103.113 A 059.127.311 A		1	TURBO
(6)	931 104 901 02	cylinder head use also: 047.103.113.A 059.127.311.A		1	GT
7	059 103 377 A	washer		10	TURBO/GT
7	059 103 377 A	washer		10	XJ XK VC
8	N 014 731 2	pan-head screw M 12 X 115		10	TURBO/GT
(8)	068 103 384 A	pan-head screw M 12 X 115		10	XJ XK VC
9	056 103 379	plug		1	
10	* 931 104 337 06	cylinder head gasket		1	XJ XK VC
(10)	* 931 104 337 06	cylinder head gasket		1	TURBO/GT
11	* 059 127 311 A	gasket		1	
11A	047 103 113 A	cover		1	
11B	931 104 041 00	adapter	82-	1	M31.03/04
11C	900 067 057 02	pan-head screw M 8 X 20		2	
11D	N 011 525 13	washer A 8,4		2	

Pos	Part Number	Name	Remarks	Qty	Model
12	056 103 397	stud M 8 X 56		10	
13	900 031 001 02	washer 8,4		10	
14	N 011 008 8	hexagon nut M 8		10	
15	N 010 221 3	hexagon-head bolt M 6 X 35		2	
16	N 012 226 5	spring washer B 6		2	
17	N 044 411 5	stud M 8 X 30		4	XJ XK VC
(17)	999 062 010 02	stud M 8 X 35		2	TURBO/GT
(17)	999 062 044 02	stud M 8 X 30		2	TURBO/GT
17A	N 044 411 5	stud M 8 X 30		8	XJ XK VC
(17A)	999 062 238 02	stud M 8 X 25		8	TURBO/GT
18	047 103 475	cylinder head cover		1	
19	060 198 025 A	set of seals		1	
20	026 103 485 A	cover		1	
22	N 044 462 2	stud M 6 X 25		8	
23	N 012 226 5	spring washer B 6		8	
24	900 076 010 02	hexagon nut M 6		8	
25	E 048 905 215 A	housing for distributor driving mechanism		1	
26	* 048 905 341 B	gasket		1	
27	N 010 218 6	hexagon-head bolt 6 X 25		3	
(27)	N 010 220 3	hexagon-head bolt M 6 X 30		1	TURBO/GT
28	N 012 226 5	spring washer A 6		3	
29	046 103 392	engine lifting bracket		1	
30	046 103 391	engine lifting bracket		1	
31	931 110 181 00	hose	82-	1	M31.03/04
32	999 512 346 00	hose clamp LC 16 - 25	82-	2	M31.03/04
		- -- E N D -- -			

Model	Year	MG	SG	Illustration	Restrictions	Update				
924	85	1	03	103-05		187	11:45	06.04.2005	PORSCHE	PET	PORSCHE

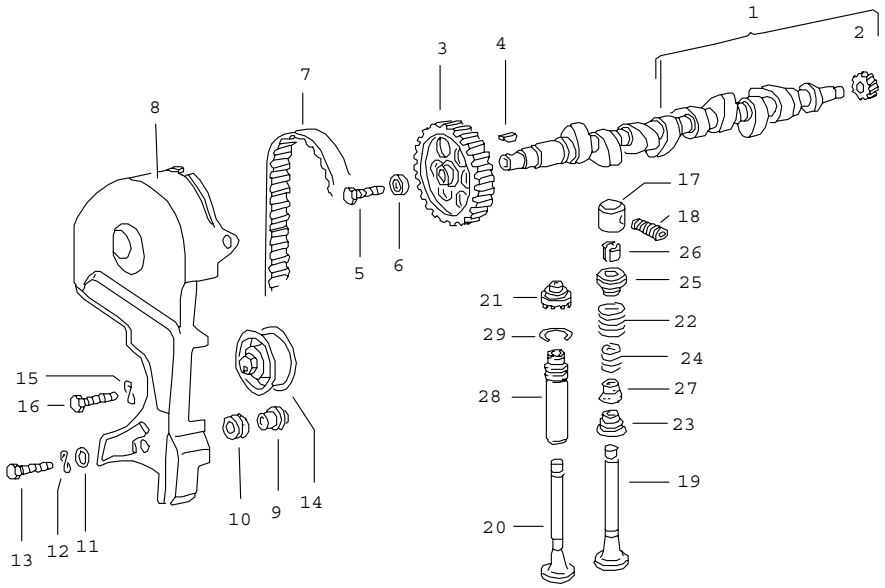

Pos	Part Number	Name	Remarks	Qty	Model
		camshaft valves			
1	046 109 021	camshaft		1	924/TURBO
1	931 105 021 01	camshaft		1	GT
2	048 109 109	drive wheel f.ignition distributor		1	
3	049 109 111 C	gear wheel		1	
4	N 012 708 2	woodruff key		1	
5	N 010 137 1	hexagon-head bolt M 12 X 1,5 X 35		1	
6	056 109 143	washer		1	
7	056 109 119 A	toothed belt		1	
8	E 048 109 123	cover for toothed belt	/LL	1	XK VC
8	047 109 121	cover for toothed belt	/RL	1	XJ
8	931 105 051 00	cover for toothed belt		1	TURBO/GT
9	056 109 135	bearing sleeve		3	
10	056 129 669 B	grommet		3	
11	N 011 612 3	washer R 7		3	
12	N 012 226 5	spring washer A 6		3	
13	N 010 218 6	hexagon-head bolt M 6 X 25		3	
14	056 109 243 D	tensioning roller		1	
15	900 028 005 02	spring washer A 10		1	
16	N 010 455 3	screw M 10 X 55		1	
17	046 109 311	cam follower		8	924/TURBO
17	931 105 121 00	cam follower	81	8	GT
18	046 109 453 C	adjusting screw		8	
18	046 109 453 D	adjusting screw 1 noctch		X	

Pos	Part Number	Name	Remarks	Qty	Model
18	046 109 453 E	adjusting screw 2 notches		X	
18	046 109 453 F	adjusting screw 3 notches		X	
18	046 109 453 G	adjusting screw 4 notches		X	
19	046 109 601 A	intake valve		4	XJ XK VC
19	931 105 401 02	intake valve		4	TURBO/GT
20	046 109 611 A	exhaust valve		4	XJ XK VC
20	931 105 406 02	exhaust valve		4	TURBO/GT
21	046 109 617	roto cap clockwise rotation		4	XJ XK VC
21	046 109 617	roto cap clockwise rotation		8	TURBO/GT
22	E 046 109 623	valve spring outer		8	
23	046 109 629	concave washer lower intake valve		4	XJ XK VC
24	046 109 633	valve spring inner		8	
25	059 109 641 A	concave washer upper		8	
26	059 109 651	collet		16	
27	* 046 109 675 A	valve stem seal		8	
28	046 103 415 A	valve guide exhaust standard dimension 14,04 MM without groove		4	XJ XK VC
28	046 103 419 A	valve guide exhaust 1st oversize 14,24 MM one groove		4	XJ XK VC
28	931 104 324 04	valve guide exhaust 1st oversize 14,08 MM one groove		4	TURBO/GT
28	046 103 423 A	valve guide exhaust 2nd oversize 14,44 MM two grooves		4	XJ XK VC
28	931 104 324 05	valve guide exhaust 2nd oversize 14,11 MM two grooves		4	TURBO/GT
28	048 103 415 A	valve guide intake standard dimension 14,04 MM without groove		4	XJ XK VC
28	048 103 419 A	valve guide intake 1st oversize 14,22 MM one groove		4	XJ XK VC
28	931 104 323 04	valve guide intake 1st oversize 14,08 MM one groove		4	TURBO/GT
28	048 103 423 A	valve guide intake 2nd oversize 14,44 MM two grooves		4	XJ XK VC
28	931 104 323 05	valve guide intake 2nd oversize 14,11 MM two grooves		4	TURBO/GT
29	N 012 460 1	snap ring		8	
		- -- E N D -- -			

Model	Year	MG	SG	Illustration	Restrictions	Update	11:45	06.04.2005	PORSCHE PET PORSCHE
924	85	1	04	104-00		187			

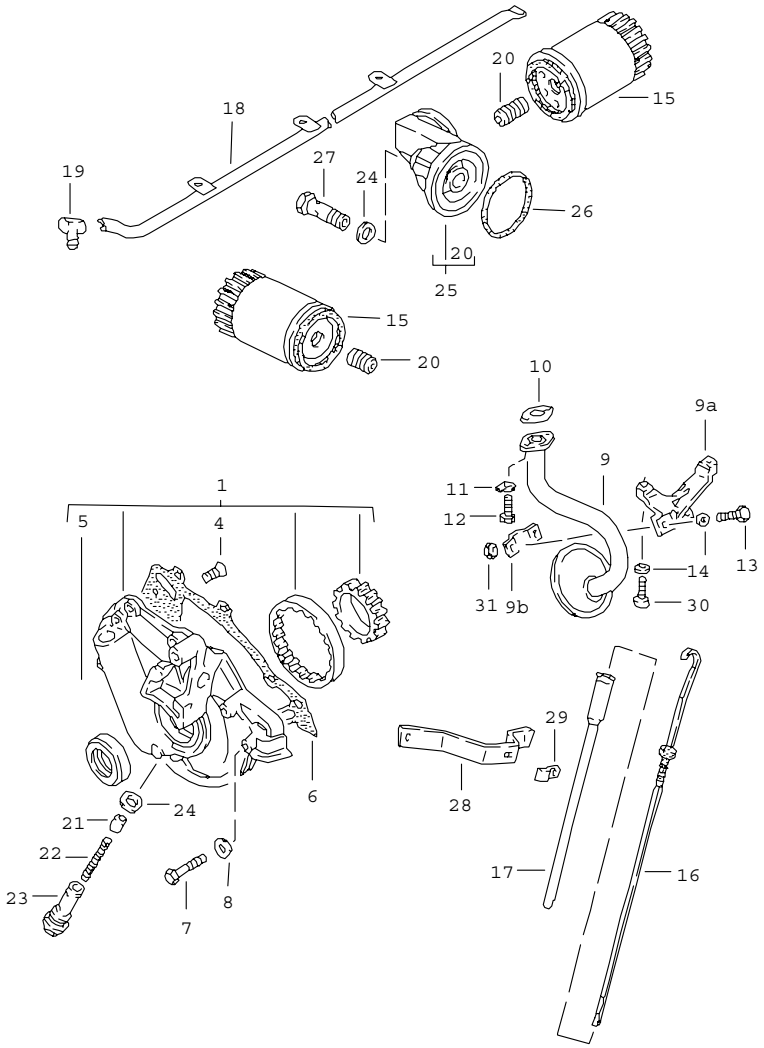

Pos	Part Number	Name	Remarks	Qty	Model
		engine lubrication			924
1	E 046 115 105 A	oil pump ready for installation		1	
4	E N 033 178 1	countersunk-head screw M 6 X 15		6	
5	E 048 115 147	sealing ring 35 X 54 X 10		1	
6	* 046 115 189 A	gasket		1	
7	N 010 339 3	hexagon-head bolt M 6 X 40		5	
7	N 010 347 3	hexagon-head bolt M 6 X 35		1	
8	900 031 011 02	washer 6,4		6	
9	047 115 251 B	intake pipe		1	
9A	047 115 267 C	retaining bracket		1	
9B	047 115 285	clip		1	
10	* 048 115 257	gasket		1	
11	048 115 259	tab washer		1	
12	N 900 572 01	hexagon socket head bolt M 6 X 15		2	
13	N 010 210 7	hexagon-head bolt M 6 X 10		1	
14	N 012 226 5	spring washer A 6		1	
15	931 107 701 00	oil filter		1	
16	047 115 611 A	oil level dipstick		1	
17	E 047 103 635	guide tube		1	
18	047 115 701	oil splash tube		1	
19	E 052 115 707	adapter		1	
20	059 115 721	union		1	
21	056 115 411 A	piston		1	
22	068 115 421	spring		1	

Pos	Part Number	Name	Remarks	Qty	Model
23	046 115 419	housing relief valve		1	
24	N 043 815 2	sealing ring A 20 X 24		2	
25	046 115 573 A	bracket for oil filter	/RL	1	
26	046 115 581	o-ring 62 X 3	/RL	1	
27	E 046 115 579 A	banjo bolt	/RL	1	
28	E 047 115 641	support		1	
29	047 115 645	clip		1	
30	900 067 011 02	pan-head screw M 6 X 20		2	
31	900 076 010 02	hexagon nut M 6		2	
		- -- E N D -- -			

Pos	Part Number	Name	Remarks	Qty	Model

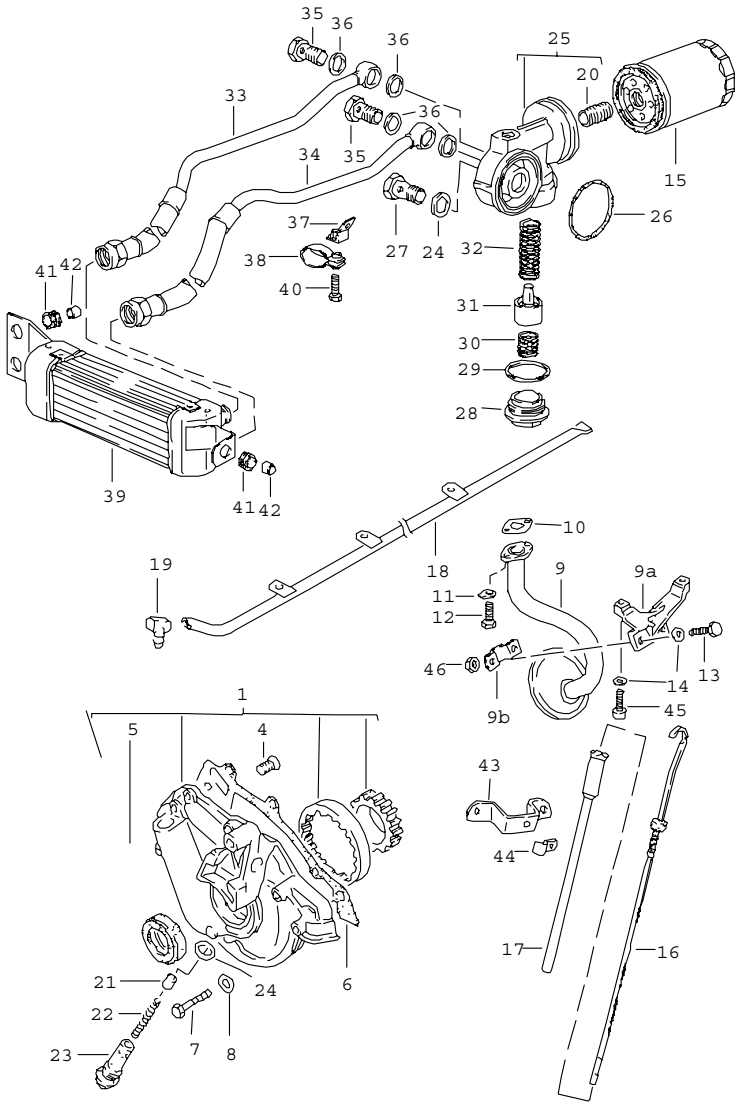

Pos	Part Number	Name	Remarks	Qty	Model
		engine lubrication engine oil cooler			TURBO/GT
1	E 046 115 105 A	oil pump ready for installation		1	
4	E N 033 178 1	countersunk-head screw M 6 X 15		6	
5	E 048 115 147	sealing ring 35 X 54 X 10		1	
6	* 046 115 189 A	gasket		1	
7	N 010 339 3	hexagon-head bolt M 6 X 40		5	
7	N 010 347 3	hexagon-head bolt M 6 X 35		1	
8	900 031 011 02	washer 6,4		6	
9	047 115 251 B	intake pipe		1	
9A	047 115 267 C	retaining bracket		1	
9B	047 115 285	clip		1	
10	* 048 115 257	gasket		1	
11	048 115 259	tab washer		1	
12	N 900 572 01	hexagon socket head bolt M 6 X 15		2	
13	N 010 210 7	hexagon-head bolt M 6 X 10		1	
14	N 012 226 5	spring washer A 6		1	
15	931 107 701 00	oil filter		1	
16	047 115 611 A	oil level dipstick		1	
17	E 047 103 635	guide tube		1	
18	047 115 701	oil splash tube		1	
19	E 052 115 707	adapter		1	
20	059 115 721	union		1	
21	056 115 411 A	piston		1	
22	068 115 421	spring		1	

Pos	Part Number	Name	Remarks	Qty	Model
23	046 115 419	housing relief valve		1	
24	N 043 815 2	sealing ring A 20 X 24		2	
25	931 107 151 00	bracket for oil filter		1	
26	999 701 621 40	o-ring 63,09 X 3,53		1	
27	E 046 115 579 A	banjo bolt		1	
28	931 107 152 00	screw plug		1	
29	900 123 098 70	sealing ring A 42 X 49		1	
30	928 107 173 00	spring		1	
31	928 107 172 02	regulator insert		1	
32	928 107 171 01	spring		1	
33	931 107 127 11	oil pipe oil cooler engine		1	TURBO
33	931 107 127 12	oil pipe oil cooler engine	81	1	GT
34	931 107 129 11	oil pipe oil cooler engine		1	TURBO
34	931 107 129 12	oil pipe oil cooler engine	81	1	GT
35	999 134 023 02	banjo bolt		2	
36	900 123 106 30	sealing ring A 18 X 24		4	
37	931 107 125 01	retaining bracket		1	
38	999 511 066 02	clamp		2	
39	E 931 207 051 01	engine oil cooler		1	TURBO
39	E 931 207 051 04	engine oil cooler	81	1	GT
40	900 378 030 09	hexagon-head bolt M 6 X 20		1	
41	056 129 669 B	grommet		3	
42	052 109 135	spacer sleeve		3	
43	E 931 107 154 00	support		1	
44	047 115 645	clip		1	
45	900 067 011 02	pan-head screw M 6 X 20		2	
46	900 076 010 02	hexagon nut M 6		2	

- -- E N D -- -

Model	Year	MG	SG	Illustration	Restrictions	Update	11:46	06.04.2005	PORSCHE PET PORSCHE
924	85	1	04	104-10		187			

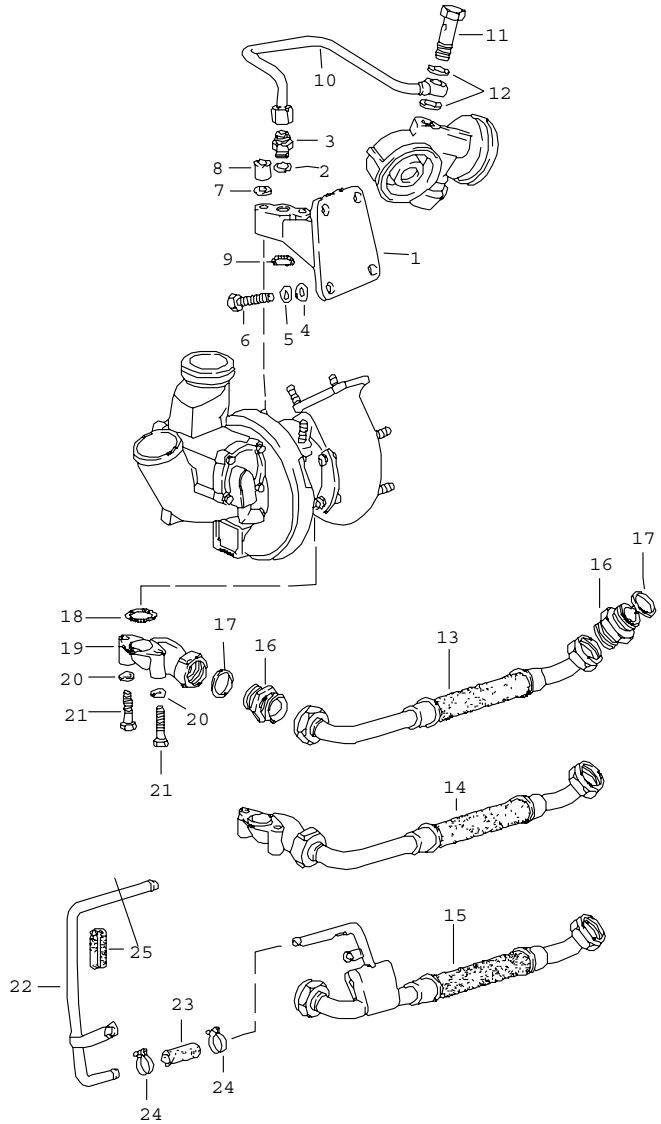

Pos	Part Number	Name	Remarks	Qty	Model
		engine lubrication turbocharger			TURBO/GT
1	931 123 124 03	bracket		1	
2	900 123 008 30	sealing ring A 14 X 20		1	
3	N 020 702 1	screw socket		1	
4	900 025 007 02	washer 8,4		4	
5	N 012 241 8	spring washer B 8		4	
6	900 075 083 02	hexagon-head bolt M 8 X 25		4	
7	900 031 001 02	washer 8,4		2	
8	999 085 001 02	socket head nut		2	
9	999 707 043 40	o-ring 17 X 3		1	
10	931 107 109 05	oil pipe		1	
11	N 021 074 1	banjo bolt		1	
12	900 123 008 30	sealing ring A 14 X 20		2	
13	931 107 108 03	oil pipe	/LL	1	M31.01/02
14	931 107 108 04	oil pipe	/RL	1	M31.01
15	931 107 108 08	oil pipe	/LL 81-	1	M31.03/04/50
15	E 931 107 108 09	oil pipe	/RL 81-	1	M31.03/50
16	900 915 008 02	connection piece		2	
17	900 123 084 30	sealing ring A 26 X 31		2	
18	900 174 045 40	sealing ring 25 X 3,15		1	
19	931 107 111 02	bracket	/LL	1	
20	N 012 241 8	spring washer B 8		2	
21	900 074 134 02	hexagon-head bolt M 8 X 45		2	

Pos	Part Number	Name	Remarks	Qty	Model	Pos	Part Number	Name	Remarks	Qty	Model
22	931 107 219 01	breather pipe	82-	1	M31.03/04						
-	N 020 363 1	hose 15 X 2,5	82-	*	M31.03/04						
23	-	40 MM		1							
24	999 512 346 00	hose clamp LC 16 - 25	82-	2	M31.03/04						
25	477 209 303	hose piece	82-	1	M31.03/04						
		- -- E N D -- -									

Model	Year	MG	SG	Illustration	Restrictions	Update				
924	85	1	05	105-00		187	11:46	06.04.2005	PORSCHE	PET	PORSCHE

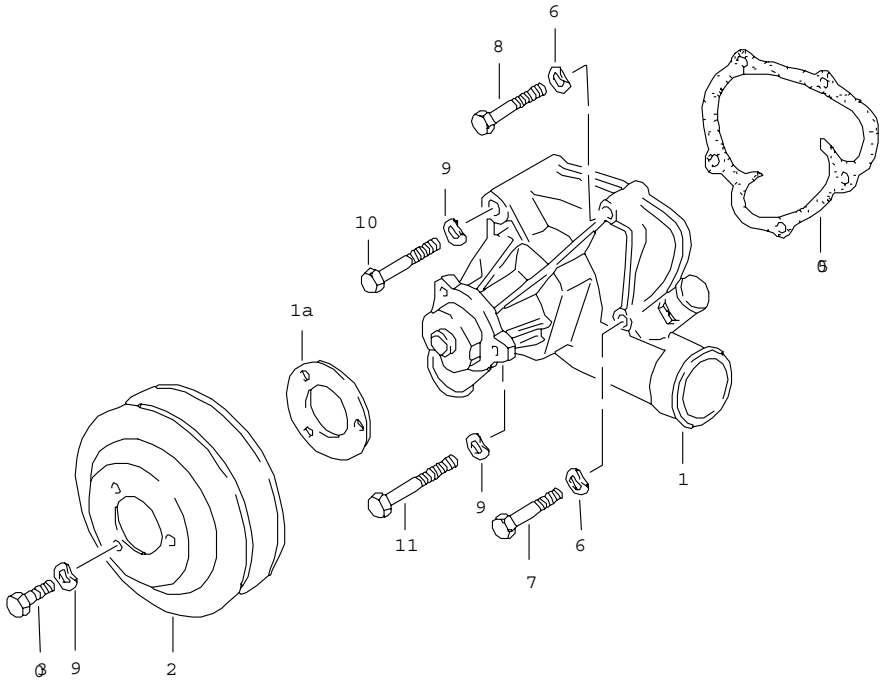

Pos	Part Number	Name	Remarks	Qty	Model
		water pump			
1	E 060 121 011	water pump		1	
1A	046 121 185	spacer		1	
2	059 121 031	v-belt pulley		1	
3	N 010 237 6	hexagon-head bolt M 8 X 12	/LL	3	924
3	900 075 087 02	hexagon-head bolt M 8 X 16		3	
5	* 046 121 041 A	gasket		1	
6	N 012 226 5	spring washer A 6		3	
7	N 010 348 4	hexagon-head bolt M 6 X 45		2	
8	N 010 221 3	hexagon-head bolt M 6 X 35		1	
9	N 012 229 3	spring washer A 8		5	
10	N 010 361 4	hexagon-head bolt M 8 X 65		1	
11	N 010 373 2	hexagon-head bolt M 8 X 72		1	
		- -- E N D -- -			

Model	Year	MG	SG	Illustration	Restrictions	Update	11:46	06.04.2005	PORSCHE PET PORSCHE
924	85	1	05	105-05		187			

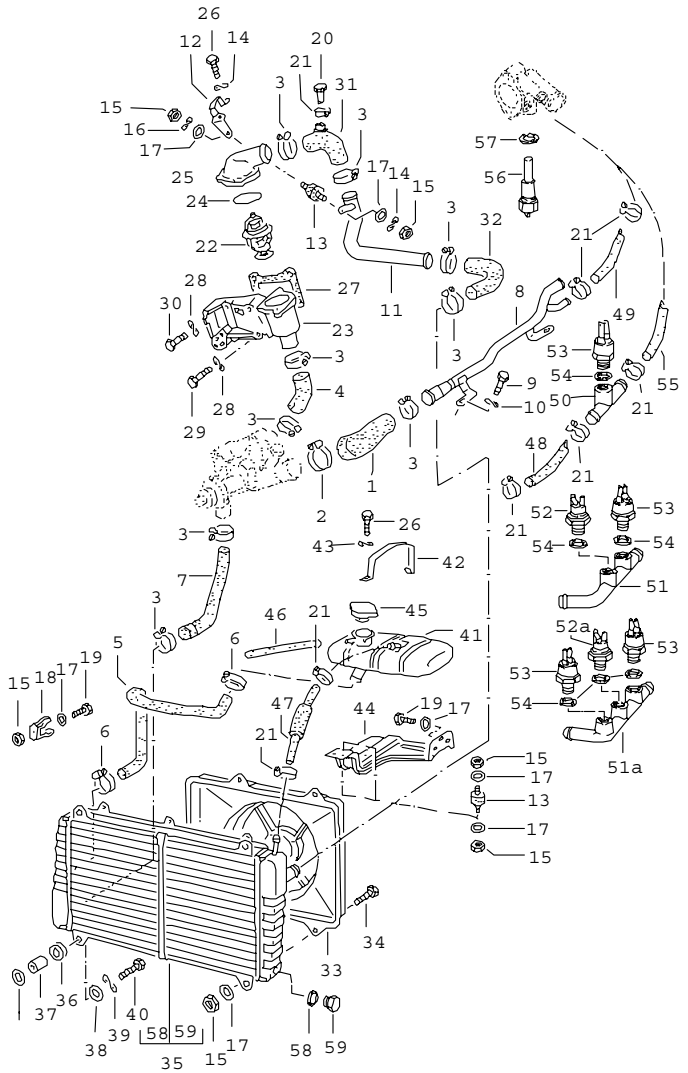

Pos	Part Number	Name	Remarks	Qty	Model
		water cooled			924
1	046 121 051	water hose		1	
2	999 512 348 02	hose clamp 40 - 60		1	
3	N 024 516 3	hose clamp 30 - 45		9	
4	046 121 053	water hose		1	
5	047 121 060	water hose		1	
6	999 512 252 02	hose clamp 23 - 35		2	
7	046 121 061	water hose		1	
8	047 121 073	water tube		1	
9	900 075 087 02	hexagon-head bolt M 8 X 16		1	
10	900 027 015 02	lock ring B 8		1	
11	047 121 073 B	water tube		1	
12	047 121 094	support		1	
13	999 703 239 00	bonded rubber buffer		3	
14	N 012 226 5	spring washer A 6		3	
15	900 076 010 02	hexagon nut M 6		11	
16	N 012 226 5	spring washer B 6		1	
17	N 011 524 7	washer A 6,4		14	
18	E 046 121 095 A	hose clamp		2	
19	N 010 215 13	hexagon-head bolt M 6 X 15		5	
20	046 121 099	plug		1	
21	999 512 554 00	hose clamp 12 - 20		5	
22	E 059 121 113 B	thermostat 83 degree c		1	

Pos	Part Number	Name	Remarks	Qty	Model
22	059 121 113 A	thermostat 87 degree c		1	
23	048 121 117	housing		1	
24	* 038 121 119 B	sealing ring		1	
25	059 121 121	cover		1	
26	N 010 217 9	hexagon-head bolt M 6 X 20		3	
27	* 048 121 127 A	gasket		1	
28	N 012 229 3	spring washer A 8		4	
29	N 010 335 5	hexagon-head bolt M 8 X 35		2	
30	900 075 029 09	hexagon-head bolt M 8 X 25		2	
31	E 047 121 175	hose elbow		1	
32	931 106 157 00	hose elbow		1	
33	477 121 207 C	fan cowl		1	
33	477 121 207 E	fan cowl with air conditioner		1	
34	N 010 210 7	hexagon-head bolt M 6 X 12		4	
35	477 121 251 A	radiator		1	
36	056 129 669 B	grommet		4	
37	052 109 135	spacer sleeve		4	
38	N 011 612 3	washer R 7		8	
39	N 012 226 5	spring washer B 6		4	
40	N 010 218 6	hexagon-head bolt M 6 X 25		4	
41	028 121 405 A	expansion tank		1	
42	028 121 409	restraining strap		1	
43	E N 012 036 5	lock ring		1	
44	477 121 413 B	bracket		1	
45	028 121 453	cover		1	
-	N 020 281 1	hose		*	
46	-	7 X 2,5 MM		1	
47	477 121 105	water hose		1	
48	810 819 371 D	water hose		1	
49	810 819 371 G	water hose		1	
50	056 121 167	connecting piece		1	
53	047 131 851 D	temperature switch	81-	1	
54	N 013 808 3	sealing ring A 10 X 16		2	
55	047 121 621 A	water hose		1	
56	043 906 163 A	temperature time switch		1	
57	900 123 007 30	sealing ring A 14 X 18		1	
58	900 123 050 20	sealing ring A 8 X 11,5		1	
59	N 016 158 1	screw plug AM 8 X 1		1	

- -- E N D -- -

Model	Year	MG	SG	Illustration	Restrictions	Update			
924	85	1	05	105-10		187	11:46	06.04.2005	PORSCHE PET PORSCHE

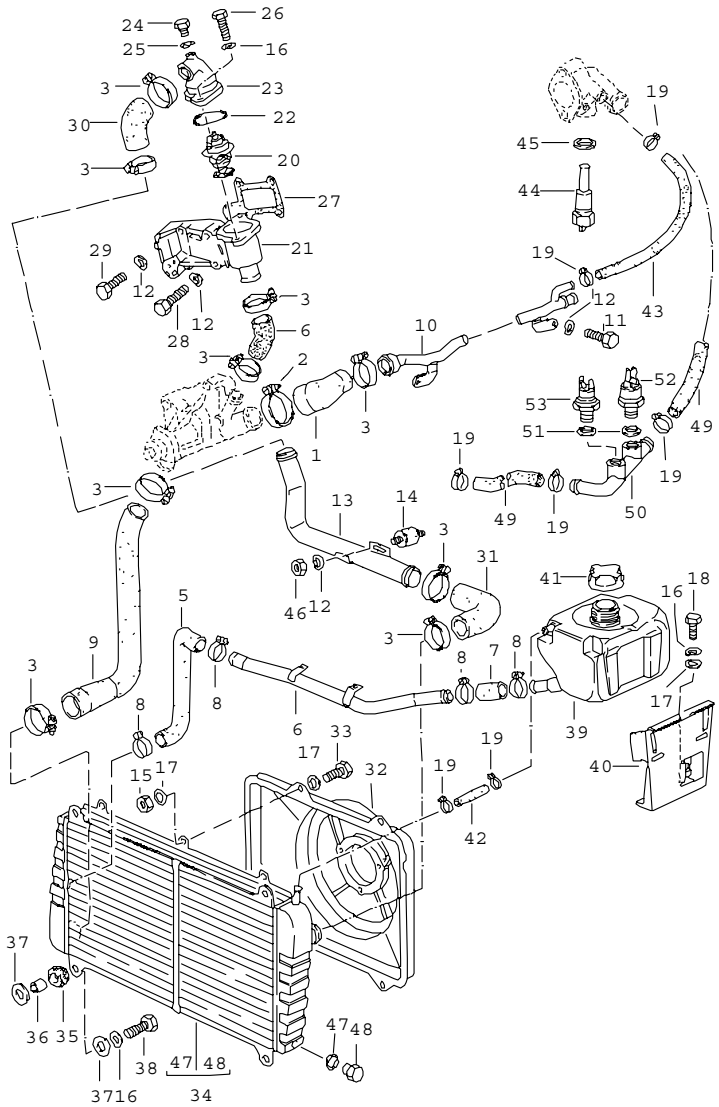

Pos	Part Number	Name	Remarks	Qty	Model
		water cooled			TURBO/GT
1	046 121 051	water hose		1	
2	999 512 348 02	hose clamp 40 - 60		1	
3	N 024 516 3	hose clamp 30 - 45		9	
4	046 121 053	water hose		1	
5	931 106 267 01	water hose		1	
6	E 931 106 263 01	water tube		1	
-	999 238 001 40	water hose 20 X 27		*	
7	-	150 MM		1	
8	999 512 252 02	hose clamp 23 - 35		4	
9	046 121 061	water hose		1	
10	931 106 052 00	water tube		1	
11	900 075 087 02	hexagon-head bolt M 8 X 16		2	
12	900 027 015 02	lock ring B 8		6	
13	931 106 051 04	water tube	-81	1	
13	931 106 051 04	water tube	82-	1	
14	931 106 163 00	rubber mounting		1	
15	900 076 010 02	hexagon nut M 6		8	
16	N 012 226 5	spring washer B 6		8	
17	N 011 524 7	washer A 6,4		10	
18	N 010 215 13	hexagon-head bolt M 6 X 15		3	
19	999 512 554 00	hose clamp 12 - 20		4	
20	059 121 113 A	thermostat 87 degree c		1	

Model	Year	MG	SG	Illustration	Restrictions	Update				
924	85	1	05	105-10		187	11:46	06.04.2005	PORSCHE	PET	PORSCHE

Pos	Part Number	Name	Remarks	Qty	Model
21	048 121 117	housing		1	
22	* 038 121 119 B	sealing ring		1	
23	931 106 155 00	cover		1	
24	931 106 156 00	screw plug		1	
25	N 013 830 7	sealing ring A 8 X 12		1	
26	N 010 217 9	hexagon-head bolt M 6 X 20		2	
27	* 048 121 127 A	gasket		1	
28	N 010 335 5	hexagon-head bolt M 8 X 35		2	
29	900 075 029 09	hexagon-head bolt M 8 X 25		2	
30	E 931 106 159 00	hose elbow		1	
31	931 106 157 00	hose elbow		1	
32	477 121 207 C	fan cowl		1	
32	477 121 207 E	fan cowl with air conditioner		1	
33	N 010 210 7	hexagon-head bolt M 6 X 12		4	
34	477 121 251 A	radiator		1	
35	056 129 669 B	grommet		4	
36	052 109 135	spacer sleeve		4	
37	N 011 612 3	washer R 7		8	
38	N 010 218 6	hexagon-head bolt M 6 X 25		4	
39	931 106 265 02	expansion tank		1	
40	E 477 809 853	bracket		1	
41	171 121 321 B	cover		1	
-	000 043 205 14	hose		1	
43	810 819 371 G	water hose		1	
44	928 605 101 00	temperature time switch		1	
45	900 123 007 30	sealing ring A 14 X 18		1	
46	N 011 008 8	hexagon nut M 8		1	
47	900 123 050 20	sealing ring A 8 X 11,5		1	
48	N 016 158 1	screw plug AM 8 X 1		1	

- -- E N D -- -

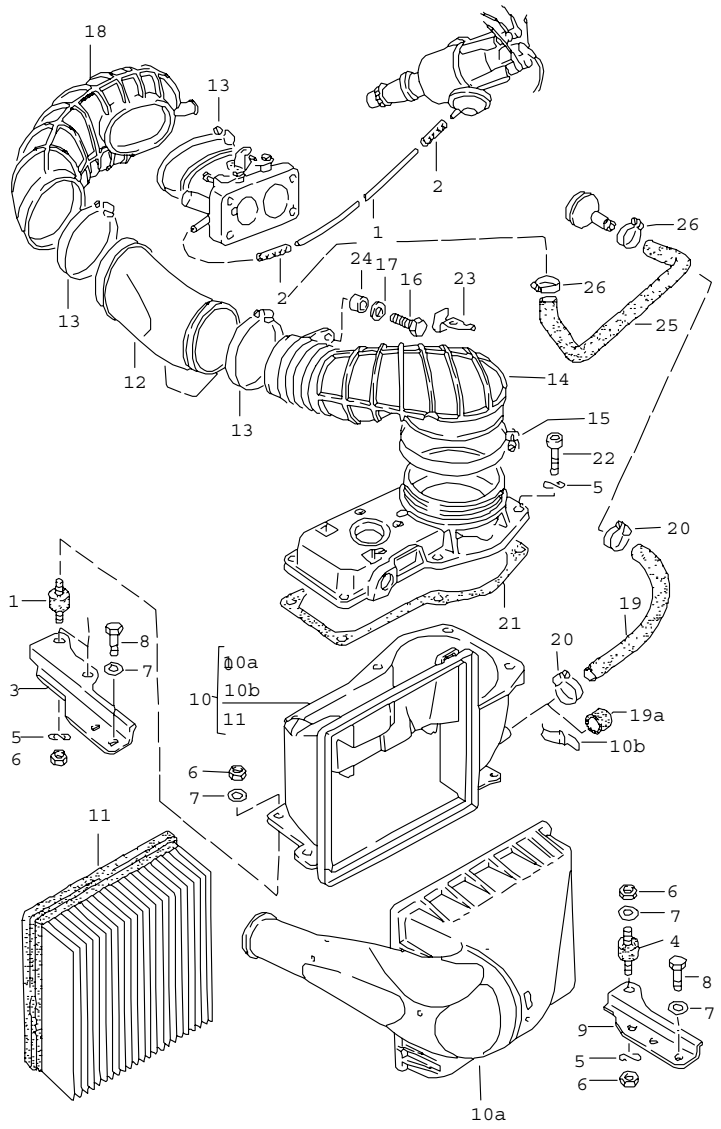

Pos	Part Number	Name	Remarks	Qty	Model
		air filter system			924
-	N 020 139 1	hose 4 X 1		*	
1	-	700 MM		1	
-	N 020 353 5	hose 3,5 X 2		*	
2	-	40 MM		2	
3	047 129 545 B	bracket		1	
4	999 703 239 00	bonded rubber buffer		3	
5	N 012 226 5	spring washer B 6		9	
6	900 076 010 02	hexagon nut M 6		6	
7	N 011 524 7	washer A 6,4		6	
8	N 010 215 13	hexagon-head bolt M 6 X 15		4	
9	047 129 547 B	bracket		1	
10	477 129 611 D	air cleaner ready for installation		1	
10A	477 129 615 D	air cleaner cover without retaining clip		1	
10BA	055 129 635	retaining clip		4	
10B	055 129 635	retaining clip		4	
11	021 129 620	air cleaner cartridge		1	
12	047 133 083 C	intake manifold		1	
(12)	047 133 083 E	intake manifold	82-	1	
(12)	047 133 083 F	intake manifold		1	(S)
(12)	047 133 083 D	intake manifold	82-	1	(S)(CH)
(12)	047 133 083 E	intake manifold	AUT. 82-	1	(S)
(12)	047 133 083 D	intake manifold		1	(USA) (CDN) (J) (AUS)
13	999 512 350 02	hose clamp 80 - 100		3	

Pos	Part Number	Name	Remarks	Qty	Model
14	047 133 367 E	hose		1	
15	N 024 521 1	hose clamp A 12 X 126		1	
16	900 075 014 02	hexagon-head bolt M 6 X 18		1	
17	900 151 029 02	washer B 6,4		1	
18	047 133 367 C	hose		1	
(18)	047 133 367 B	hose		1	(S)
-	047 131 467	screw socket		1	(S)
-	N 011 565 3	washer 15		2	(S)
-	900 078 005 01	hexagon nut M 14 X 1,5		1	(S)
-	N 020 343 1	hose 18 X 2,5 MM		*	
19A	930 110 256 01	cap		1	
20	999 512 346 00	hose clamp 16 - 25		2	
21	049 133 379 A	gasket		1	
22	900 067 009 02	pan-head screw M 6 X 15		6	
23	477 133 523	retainer spring		1	
24	047 133 091	spacer sleeve		1	
25	047 103 221	vent hose		1	
26	999 512 252 02	hose clamp 23 - 35		2	
		- -- E N D -- -			

Pos	Part Number	Name	Remarks	Qty	Model

Model	Year	MG	SG	Illustration	Restrictions	Update				
924	85	1	06	106-05		187	11:47	06.04.2005	PORSCHE	PET	PORSCHE

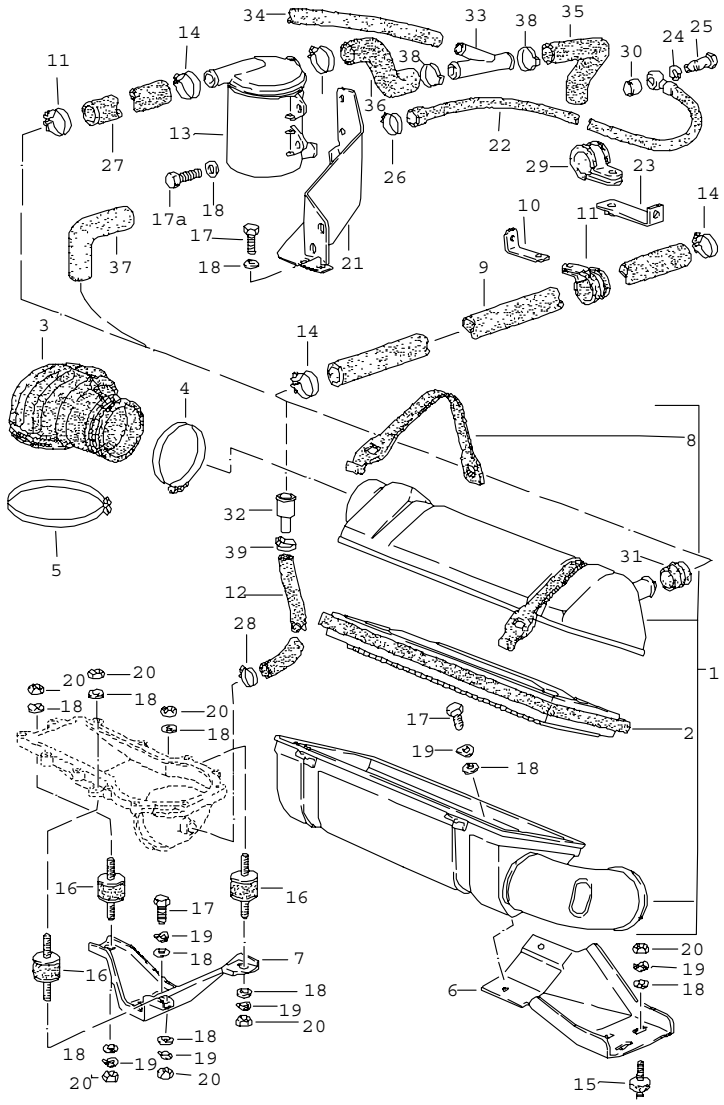

Pos	Part Number	Name	Remarks	Qty	Model
		air filter system			TURBO/GT
1	931 110 021 03	air cleaner ready for installation		1	
(1)	931 110 021 05	air cleaner ready for installation		1	(AUS) (USA) (CDN) (J)
2	931 110 121 00	air cleaner cartridge		1	
3	931 110 358 00	air box		1	
4	N 024 326 1	hose clamp		1	
5	N 024 334 1	hose clamp		1	
6	477 809 085	support		1	
7	477 805 513	support		1	
8	A 928 110 363 01	restraining strap		2	
8	928 110 363 01	restraining strap		2	
9	931 107 394 02	hose 22 X 30 650 MM		1	M31.01/02
10	931 107 159 00	support		1	
11	999 511 077 02	clamp		1	
-	999 239 016 40	hose 13 X 18	81	*	
12	-	550 MM 50 MM	 82-	1 1	
(12)	931 107 397 00	breather pipe	82-	1	M31.03/04
13	931 107 221 01	oil separator		1	
14	999 512 252 02	hose clamp LA 23 - 35		2	
15	931 110 191 00	bonded rubber buffer		3	
16	999 703 239 00	bonded rubber buffer		3	
17	999 072 005 09	hexagon-head bolt M 6 X 12		3	
17A	N 010 215 13	hexagon-head bolt M 6 X 15		2	
18	N 011 524 7	washer A 6,4		10	

Pos	Part Number	Name	Remarks	Qty	Model
19	N 012 226 5	spring washer B 6		15	
20	900 076 010 02	hexagon nut M 6		8	
21	931 107 227 00	retaining bracket		1	
22	931 107 223 03	return line	81-	1	
23	931 107 225 01	retaining bracket		1	
24	900 123 007 30	sealing ring A 14 X 18		2	
25	999 134 021 02	banjo bolt		1	
26	999 512 252 02	hose clamp LC 23 - 35		1	
27	931 107 394 02	hose 22 X 30 650 MM		1	
28	999 512 554 00	hose clamp LA 12 - 20		2	(AUS) (USA) (CDN) (J)
29	999 511 080 02	clamp		2	
30	931 107 229 00	sleeve		1	
31	999 703 168 40	cap	81-	1	
(31)	930 110 256 00	cap		1	(AUS)(USA)
32	931 107 387 00	reducing socket	81-	1	
33	931 107 385 00	branch socket	81	1	
(33)	931 107 389 00	socket	82-	1	
-	N 020 363 1	hose 15 X 2,5 1200 MM	81-	* 1	
35	931 107 169 00	hose	81-	1	
36	931 107 171 00	hose	81-	1	
37	931 107 173 00	hose	81-	1	
38	999 512 336 02	clamp 28 - 32	81-	3	
39	999 512 335 02	clamp 16 - 19	81-	1	
		- -- E N D -- -			

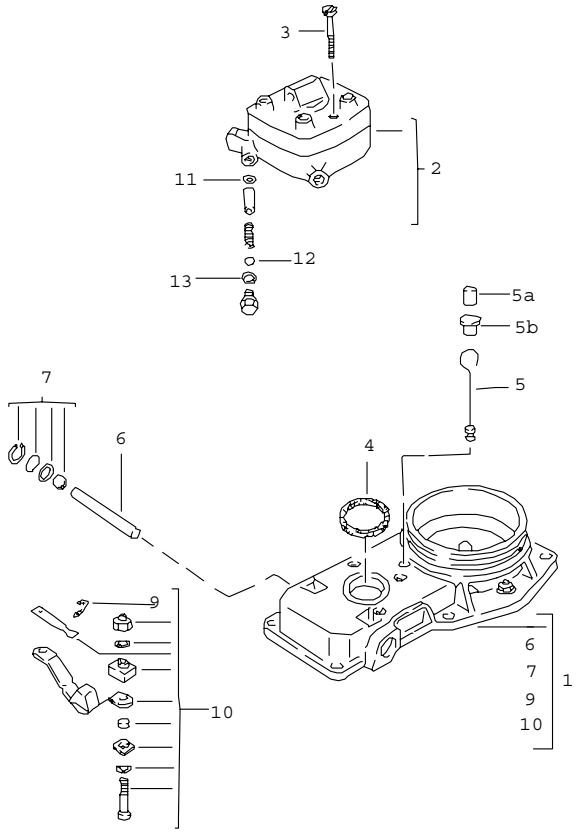

Pos	Part Number	Name	Remarks	Qty	Model
		k-jetronic 1 mixture control unit			924
1	047 133 471 A	mass air flow		1	
2	> 063 133 481 X	fuel distributor		1	
3	049 133 483	pan-head screw		3	
4	049 133 485 A	sealing ring		1	
5A	049 133 777 A	plug blue		1	
6	E 911 110 941 00	straight pin		1	
7	* 911 110 946 00	parts kit control lever		1	
9	911 110 921 00	clamp		1	
10	* 911 110 947 00	parts kit stop		1	
11	911 110 936 00	sealing ring		1	
12	911 110 937 00	shim 0,10		X	
(12)	911 110 937 01	shim 0,50		X	
13	900 123 033 20	sealing ring		1	
		- -- E N D -- -			

Model	Year	MG	SG	Illustration	Restrictions	Update	11:48	06.04.2005	PORSCHE PET PORSCHE
924	85	1	07	107-05		187			

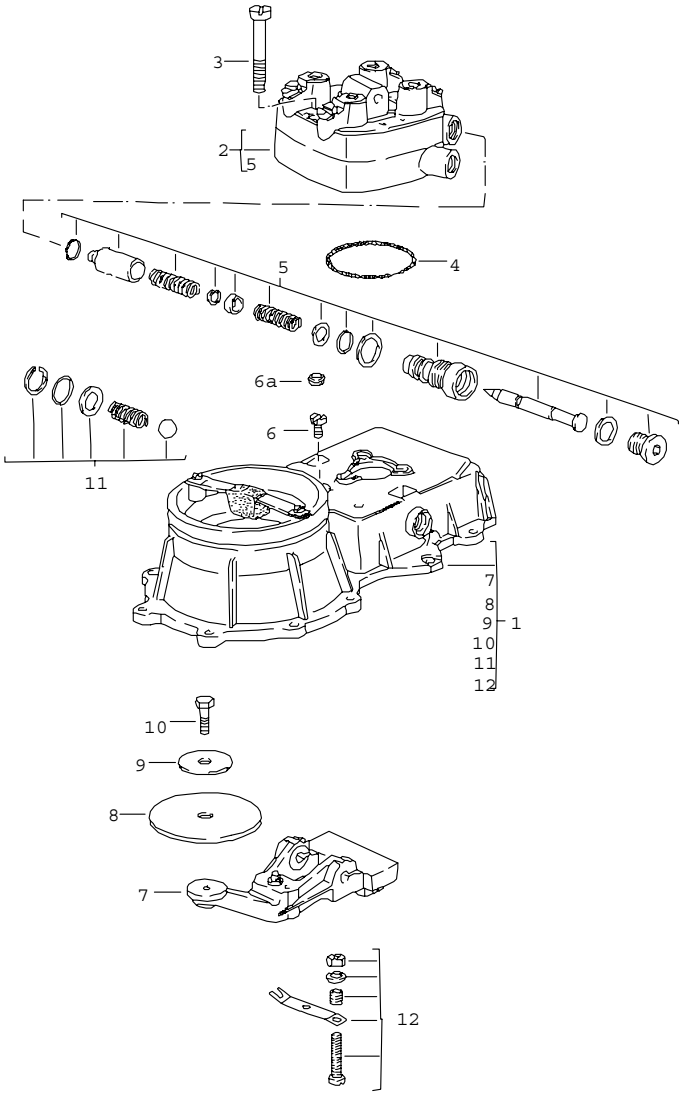

Pos		Part Number	Name	Remarks	Qty	Model
			k-jetronic 1 mixture control unit			TURBO/GT
1		931 110 906 00	mass air flow	80	1	M31.01
1	E	931 110 906 02	mass air flow	81-	1	M31.03/50
2	>	931 110 907 00	fuel distributor	80	1	M31.01
2	E	931 110 907 02	fuel distributor	81-	1	M31.03/50
3		900 146 045 02	oval-head screw		3	
4		931 110 908 00	sealing ring		1	
5	*	928 110 920 01	parts kit pressure regulator		1	
6		931 110 910 00	screw plug		1	
6A		931 110 913 00	plug blue		1	
7		931 110 909 00	control lever		1	
8		911 110 943 02	air flow sensor plate		1	
9		911 110 960 00	support washer		1	
10	E	931 110 911 00	hexagon-head bolt		1	
11	*	911 110 946 00	parts kit control lever		1	
12	*	931 110 912 00	parts kit stop		1	
			- -- E N D -- -			

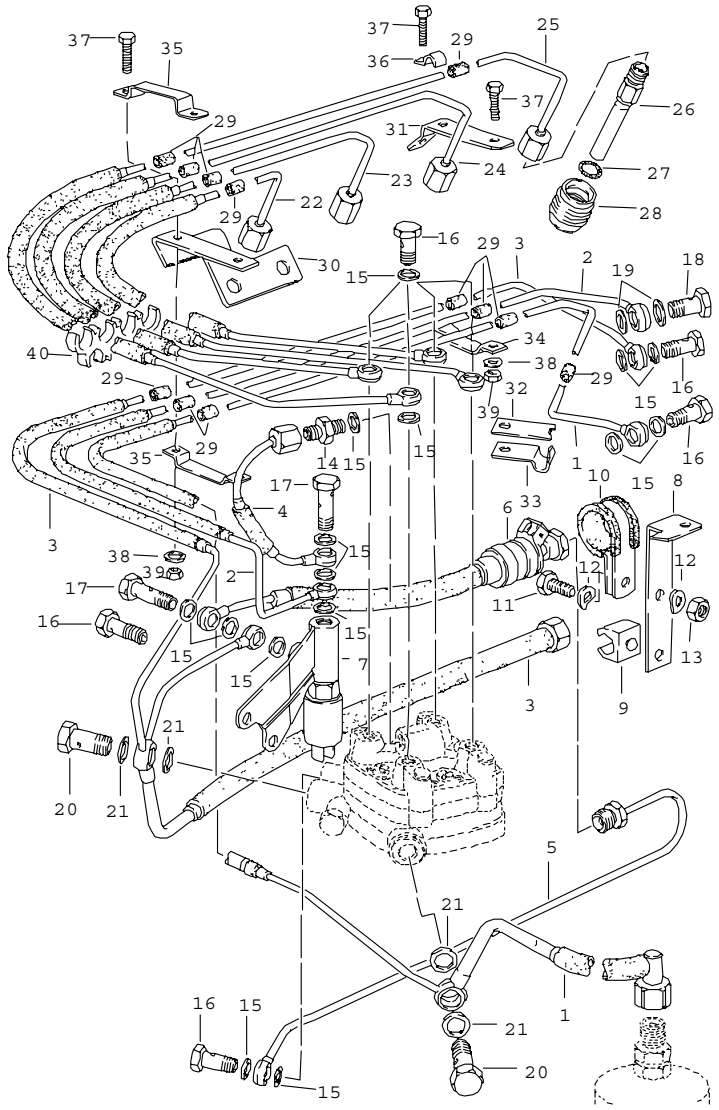

Pos	Part Number	Name	Remarks	Qty	Model
		k-jetronic 2 until F >>92A04 13233 were the following differing parts installed see catalogue 924 - 79 group 1/07/10			924
(1)	047 133 627	fuel supply line		1	
(2)	047 133 655 B	fuel control line		1	
(3)	047 133 625 C	fuel return line		1	
(22)	047 133 315	injection line cylinder 1		1	
(23)	047 133 315	injection line cylinder 2		1	
(24)	047 133 319	injection line cyl. 3		1	
(25)	047 133 321	injection line cyl. 4		1	
(26)	047 133 551	injector valve		4	
(30) E	047 133 192	support		1	
(31)	047 133 191 C	support		1	
(40)	047 133 191 D	support from F 92A04 13234>> see group 1/07/11 and information on quality group 2 of 07.06.85		1	
1	047 133 627 B	fuel line		1	
2	047 133 655 C	fuel line		1	
3	047 133 625 E	fuel line		1	

Pos	Part Number	Name	Remarks	Qty	Model
4	047 133 627 C	fuel line		1	
7	477 133 525 D	solenoid valve with support		1	
8	477 133 827	support		1	
9	999 507 255 40	cable holder		1	
14	063 133 541	screw socket		1	
15	900 123 050 20	sealing ring A 8 X 11,5		19	
16	911 110 899 00	banjo bolt		7	
17	N 900 887 01	banjo bolt		2	
18	900 175 002 02	screw		1	
19	N 013 806 2	sealing ring A 10 X 14		2	
20	N 021 071 2	banjo bolt		2	
21	N 013 812 3	sealing ring A 12 X 15,6		4	
22	047 133 315 B	injection line cylinder 1		1	
23	047 133 317 B	injection line cylinder 2		1	
24	047 133 319 B	injection line cyl. 3		1	
25	047 133 321 B	injection line cyl. 4		1	
26	049 133 551	injector valve		4	
27	034 133 557 E	o-ring		4	
28	063 133 555	socket		4	
29	E 047 133 265	rubber		12	
30	047 133 885	support		1	
31	047 133 887	support		1	
32	047 133 671	clip		1	
33	047 133 671 A	clip		1	
34	N 028 452 1	clip		1	
35	N 028 454 1	clip		2	
36	N 028 610 1	clip		1	
37	900 075 092 02	hexagon-head bolt M 4 X 10		4	
38	900 031 009 02	washer 4,3		4	
39	N 011 004 6	hexagon nut M 4		4	
40	047 133 193 G	holder		1	

- -- E N D -- -

Model	Year	MG	SG	Illustration	Restrictions	Update				
924	85	1	07	107-11		187	11:48	06.04.2005	PORSCHE	PET	PORSCHE

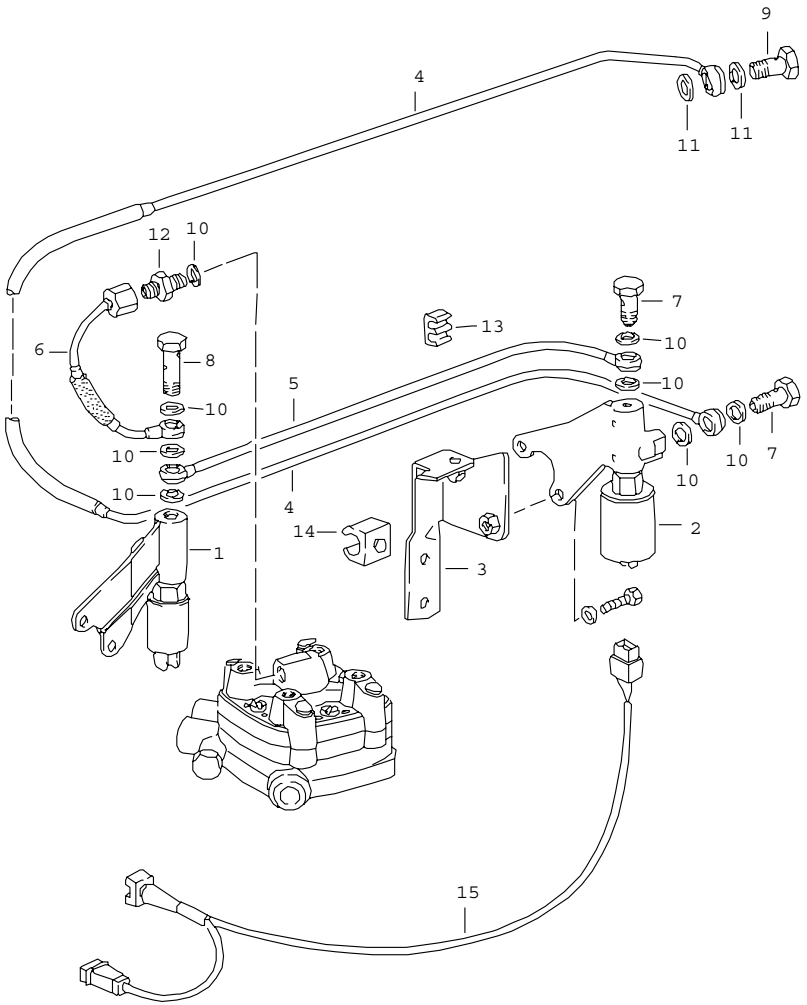

Pos	Part Number	Name	Remarks	Qty	Model
		k-jetronic 2 A			924
		F 92FN4 02804>>			
1	477 133 539 B	solenoid valve		1	
2	477 133 539 C	solenoid valve		1	
3	477 133 827 B	support		1	
4	047 133 655 D	fuel line		1	
5	047 133 685	fuel line		1	
6	047 133 627 C	fuel line		1	
7	N 021 073 1	banjo bolt		2	
8	N 900 887 01	banjo bolt		1	
9	900 175 002 02	screw		1	
10	900 123 115 30	sealing ring		7	
11	N 013 806 2	sealing ring		2	
12	063 133 541	screw socket		1	
13	928 110 150 00	terminal		1	
14	999 507 255 40	cable holder		1	
15	E 477 971 973	wiring harness		1	
		- -- E N D -- -			

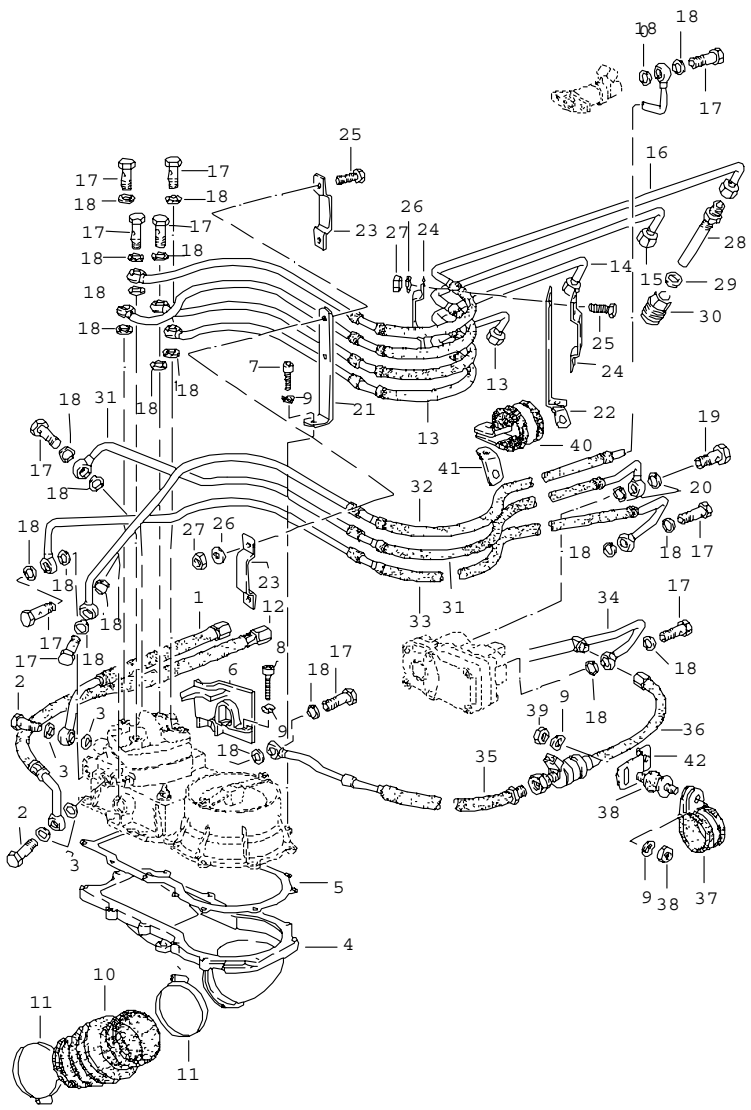

Pos	Part Number	Name	Remarks	Qty	Model
		k-jetronic 2			TURBO/GT
1	931 110 301 03	fuel line intake mixture control unit		1	
2	900 175 020 02	banjo bolt		2	
3	900 123 005 30	sealing ring A 12 X 16		4	
4	931 110 035 00	mixture control unit lower part		1	M31.01
(4)	931 110 035 01	lower part		1	M31.01/02 (S)(AUS)(J) (CDN) (USA)
(4)	931 110 035 03	lower part	81-	1	M31.03/04/50
5	931 110 137 01	gasket		1	
7	900 067 011 02	pan-head screw M 6 X 20		10	
9	N 012 226 5	spring washer B 6		10	
10	931 110 138 04	bellows		1	
11	999 512 317 00	clip 60 - 80		2	
12	E 931 110 302 04	fuel line return mixture control unit		1	
13	931 110 041 00	injection line cylinder 1		1	
14	931 110 042 00	injection line cylinder 2		1	
15	931 110 043 00	injection line cyl. 3		1	
16	931 110 044 00	injection line cyl. 4		1	
17	911 110 899 00	banjo bolt		9	
18	900 123 050 20	sealing ring A 8 X 11,5		18	
19	900 175 002 02	screw		1	

Pos	Part Number	Name	Remarks	Qty	Model	Pos	Part Number	Name	Remarks	Qty	Model
20	N 013 806 2	sealing ring A 10 X 14		2							
21	931 110 131 01	support		1							
22	931 110 190 02	support		1							
23	E N 028 550 1	clip 4 X 7		2							
24	E N 028 453 1	clip 4 X 10		2							
25	900 075 092 02	hexagon-head bolt M 4 X 10		4							
26	900 031 009 02	washer 4,3		4							
27	N 011 004 6	hexagon nut M 4		4							
28	931 110 225 00	injector valve		4							
29	900 123 033 20	sealing ring A 10 X 13,5		4							
30	931 110 226 01	socket		4							
31	931 110 303 01	fuel line		1							
32	931 110 304 01	fuel line		1							
33	931 110 306 01	fuel line		1							
40	999 511 115 02	clip		1							
41	931 110 193 00	support		1							
		- -- E N D -- -									

Model	Year	MG	SG	Illustration	Restrictions	Update				
924	85	1	07	107-20		187	11:49	06.04.2005	PORSCHE	PET	PORSCHE

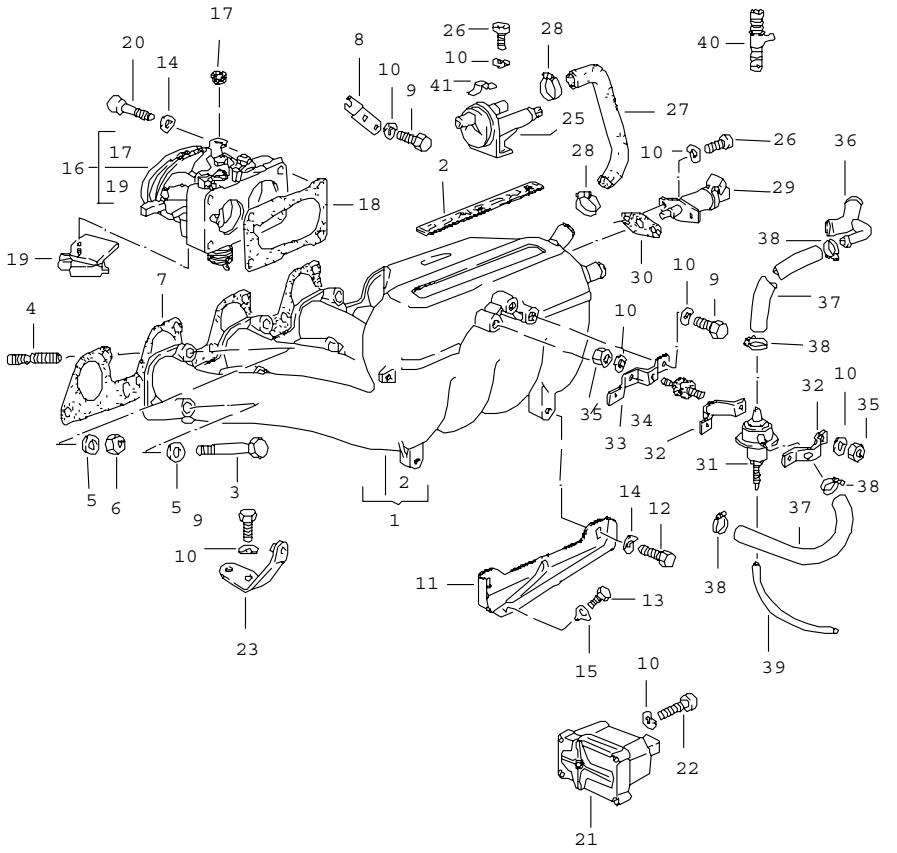

Pos	Part Number	Name	Remarks	Qty	Model
		k-jetronic 3			924
1	477 133 201	intake manifold		1	
2	931 110 403 00	logo		1	
3	N 010 373 2	hexagon-head bolt M 8 X 72		4	
4	N 044 411 5	stud M 8 X 30		4	
5	N 011 525 13	washer A 8,4		8	
6	N 011 008 8	hexagon nut M 8		4	
7	* 477 133 227	gasket		1	
8	047 133 239	support	/LL	1	
(8)	047 133 239 D	support	/RL	1	
9	N 010 215 13	hexagon-head bolt M 6 X 15		4	
10	N 012 226 5	spring washer A 6		14	
11	048 129 723	bracket		1	
12	N 010 240 7	hexagon-head bolt M 8 X 20		2	
13	900 075 087 02	hexagon-head bolt M 8 X 16		1	
14	N 012 241 11	spring washer B 8		6	
15	999 039 001 00	tab washer		1	
16	047 133 063 M	throttle housing	/LL	1	XK
(16)	047 133 063 N	throttle housing	/RL	1	XJ
(16)	047 133 063 P	throttle housing	AUT.	1	XJ XK
-	056 129 777	plug		1	(S)(CH)
17	823 721 567	bearing sleeve		1	
18	049 133 073 B	gasket		1	
20	N 014 717 2	pan-head screw M 8 X 40		4	

Pos	Part Number	Name	Remarks	Qty	Model
21	063 133 403	warm-up valve		1	XJ XK VC
21	063 133 403 X	warm-up valve		1	XJ XK VC
22	N 014 744 1	pan-head screw M 6 X 32		2	
23	047 133 093 A	support		1	
25	047 133 453 A	auxiliary air regulator		1	XJ XK
26	N 014 703 2	pan-head screw M 6 X 18		4	
27	047 133 497 B	hose		1	
28	999 512 346 00	hose clamp LC 16 - 25		2	
29	930 606 107 00	electric starting valve		1	XJ XK VC
29	477 906 171	electric starting valve	81-	1	XJ XK
30	063 906 179	gasket		1	
31	047 131 013 A	vacuum limiter		1	(S) (AUS) (CH)
32	047 131 039	clip		2	
33	047 131 455 A	bracket		1	
34	999 703 239 00	bonded rubber buffer		2	
35	900 076 010 02	hexagon nut M 6		4	
36	047 131 461 A	branch socket		1	
-	N 020 359 1	hose		*	
37	-	9 X 2,5 MM		2	
38	999 512 554 00	hose clamp 12 - 20		4	
-	N 020 361 2	hose		*	
39	-	4 X 2,5 MM		1	
40	477 133 563	t-socket		1	(S) (AUS) (CH)
41	477 133 527	retaining clip		1	
		- -- E N D -- -			

Model	Year	MG	SG	Illustration	Restrictions	Update				
924	85	1	07	107-25		187	11:49	06.04.2005	PORSCHE	PET	PORSCHE

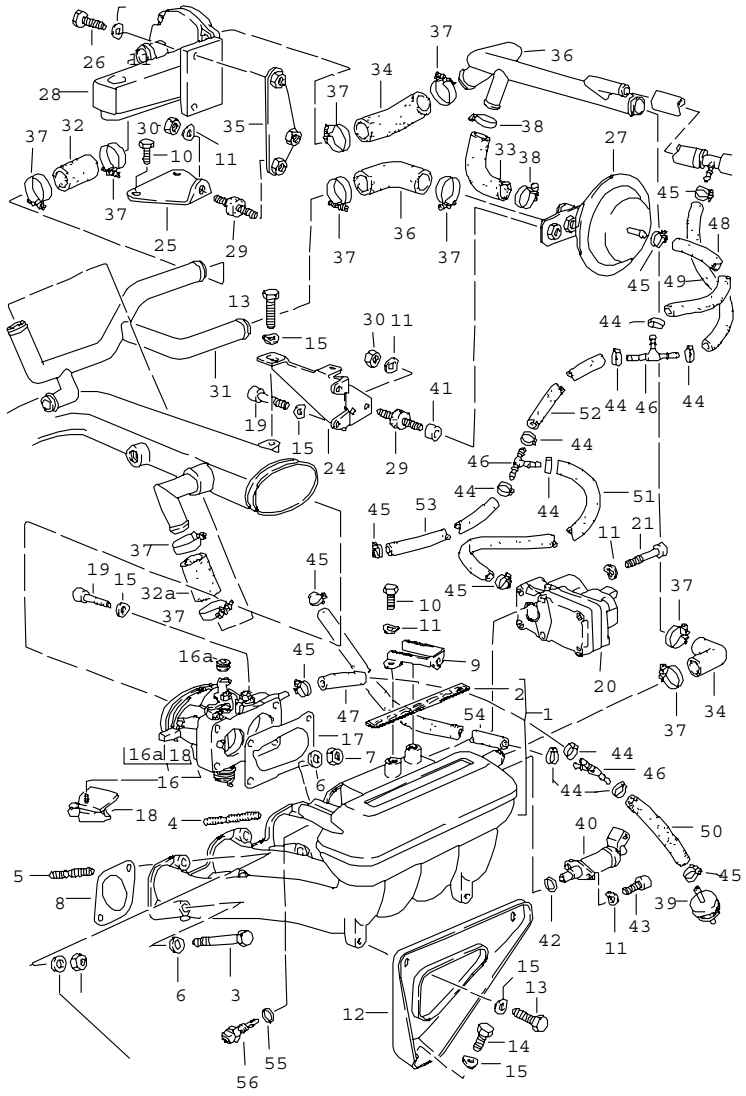

Pos	Part Number	Name	Remarks	Qty	Model
		k-jetronic 3			TURBO/GT
1	931 110 059 01	intake manifold		1	M31.01/02
(1)	931 110 059 05	intake manifold	81-	1	M31.03/04/50
2	931 110 403 00	logo		1	M31.01/02
3	900 074 170 02	hexagon-head bolt M 8 X 68		3	
(3)	N 010 375 4	hexagon-head bolt M 8 X 75		1	
4	999 062 010 02	stud M 8 X 35		2	
5	999 062 044 02	stud M 8 X 30		2	
6	900 025 007 02	washer A 8,4		8	
7	900 076 025 02	hexagon nut M 8		4	
8	* 931 110 147 00	gasket		4	
9	931 110 166 01	support	/LL	1	M31.01/02
(9)	931 110 179 00	support	/LL 81-	1	M31.03/04/50
(9)	932 110 165 00	support	/RL	1	M31.01
10	900 075 016 02	hexagon-head bolt M 6 X 16		4	
11	N 012 226 5	spring washer B 6		14	
12	931 110 145 01	bracket		1	
13	N 010 240 16	hexagon-head bolt M 8 X 20		3	
14	900 075 087 02	hexagon-head bolt M 8 X 16		1	
15	N 012 241 8	spring washer B 8		8	
16	931 110 061 02	throttle body	/LL	1	M31.01
(16)	931 110 061 05	throttle body	/RL	1	M31.01
(16)	931 110 065 00	throttle housing	/LL 81-	1	M31.03/50

Pos	Part Number	Name	Remarks	Qty	Model
(16)	931 110 067 00	throttle housing	/RL 81-	1	M31.03/50
-	944 110 071 00	return spring	81-	1	M31.03/04/50
16A	823 721 567	bearing sleeve		1	M31.01/02
17	049 133 073 B	gasket		1	M31.01/02
(17)	999 701 468 40	round seal 67,5 X 4	81-	1	M31.03/04/50
(18)	944 606 113 01	throttle-valve switch	81-	1	M31.03/50
19	N 014 717 2	pan-head screw M 8 X 40		4	M31.01/02
(19)	900 067 089 02	pan-head screw M 6 X 25	81-	2	M31.03/04/50
20	931 606 105 00	warm-up valve		1	M31.01/02/03
20	931 606 105 X	warm-up valve		1	M31.01/02/03 M31.50
20	E 931 606 107 00	warm-up valve	81-	1	M31.03
20	931 606 107 X	warm-up valve	81-	1	M31.03 (S) (AUS)
21	N 044 703 3	pan-head screw M 6 X 45		2	
24	931 110 156 03	support		1	M31.01/02
(24)	931 110 207 03	retaining bracket	/LL 81-	1	M31.03/04/50
(24)	932 110 131 01	retaining bracket with support	/RL 81-	1	M31.03/50
25	931 110 162 00	retaining bracket		1	
26	900 075 010 02	hexagon-head bolt M 6 X 12		2	
27	930 110 173 00	vacuum limiter		1	M31.01/02/04
27	930 110 173 00	vacuum limiter	81-	1	M31.03 (S) (AUS)
27	930 110 173 00	vacuum limiter	81-	1	M31.03/50
28	930 606 102 00	auxiliary air regulator		1	M31.01/02
28	931 606 102 00	auxiliary air regulator	81-	1	M31.03/04/50
29	931 110 191 00	bonded rubber buffer		3	
30	900 076 010 02	hexagon nut M 6		4	
31	931 110 171 05	pipe		1	M31.01/02
(31)	931 110 178 00	pipe	81-	1	M31.03/04
(31)	931 110 178 01	pipe	81	1	M31.50
32	931 110 173 01	hose 18 X 26 48 MM		1	
32A	931 110 173 01	hose 18 X 26		1	M31.01/02
(32A)	931 110 183 01	hose		1	M31.03/04
33	931 110 181 01	hose		1	
34	931 110 183 01	hose		3	
35	931 110 161 00	retaining bracket		1	
(35)	931 110 161 01	retaining bracket	81	1	M31.50
36	E 931 110 172 03	pipe		1	
37	999 512 237 02	hose clamp		10	
38	999 512 254 02	hose clamp 24 X 9		2	
39	931 110 321 00	check valve	80	1	
40	930 606 107 00	electric starting valve		1	
41	052 109 135	spacer sleeve		2	
42	999 701 395 50	o-ring		1	
43	N 014 740 2	pan-head screw M 6 X 16		2	
44	999 512 327 02	hose clamp		9	
45	999 512 159 02	hose clamp		7	
46	999 137 004 40	t-socket		3	
-	999 239 010 40	hose 4 X 9		*	
47	-	35 MM		1	
48	-	50 MM		1	
49	-	85 MM		1	

Pos	Part Number	Name	Remarks	Qty	Model
50	-	110 MM		1	
51	-	130 MM		1	
52	-	200 MM		1	
53	-	260 MM		1	
54	-	500 MM		1	
55	900 123 007 30	sealing ring	81-	1	M31.03/04/50
56	E 931 606 123 00	temperature sensor for charge air cooler	81-	1	M31.03/04/50
-	931 110 129 00	cover auxiliary air regulator	81	1	M31.50
		- -- E N D -- -			

Model	Year	MG	SG	Illustration	Restrictions	Update	11:49	06.04.2005	PORSCHE PET PORSCHE
924	85	1	07	107-30		187			

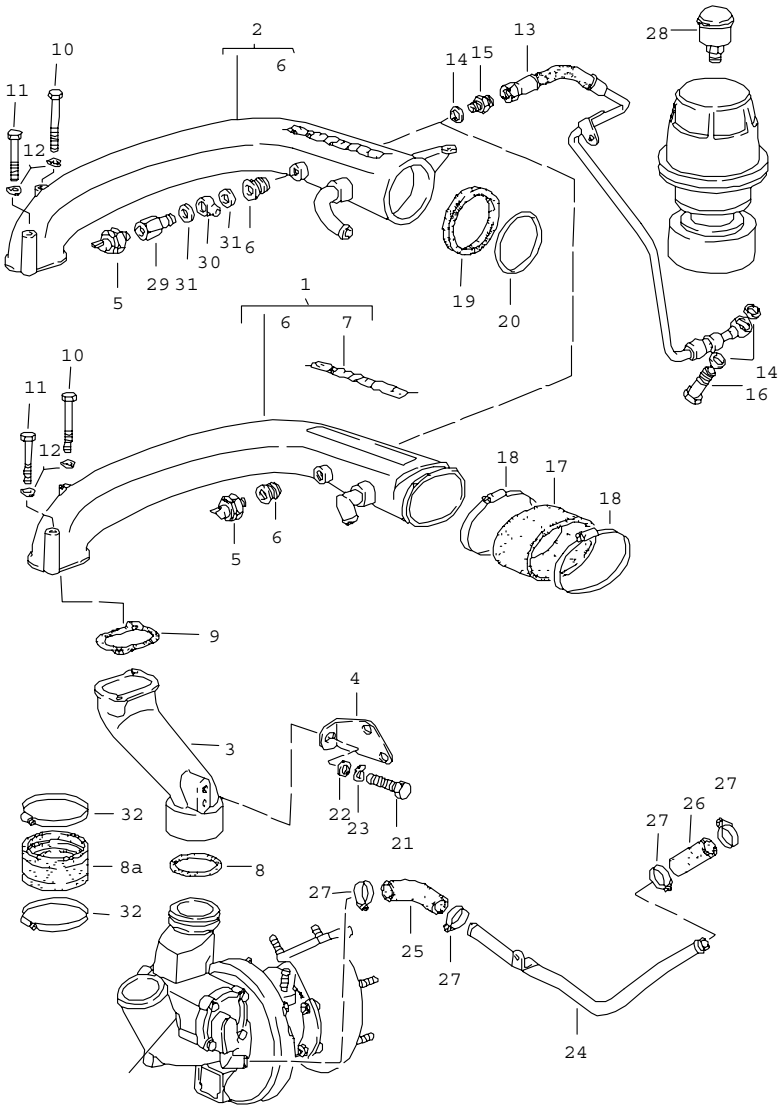

Pos	Part Number	Name	Remarks	Qty	Model
		turbocharging			TURBO/GT
1	931 110 051 01	pressure pipe	80	1	M31.01/02
2	931 110 051 03	pressure pipe	81	1	M31.03/04
2	931 110 051 03	pressure pipe	82-	1	M31.03/04
(3)	931 110 160 01	pressure pipe	80	1	M31.01/02
3	931 110 160 02	pressure pipe	81	1	M31.03/04
(3)	931 110 019 00	pressure pipe	82-	1	M31.03/04
4	931 110 155 01	support		1	
5	930 606 101 00	switch		1	
6	930 110 367 01	threaded insert		1	
7	E 931 110 405 00	logo	80	1	M31.01/02
8	* 999 701 473 40	round seal 47 X 5,7	-81	1	
8A	931 110 289 00	rubber sleeve	82-	1	M31.03/04
9	* 931 110 152 01	gasket		1	
10	N 010 313 4	hexagon-head bolt M 6 X 85		1	
11	N 010 366 4	hexagon-head bolt M 6 X 55		1	
12	N 012 226 5	spring washer B 6		2	
13	931 123 135 03	control line		1	TURBO
14	900 123 043 30	sealing ring A 12 X 15,5		3	
15	N 020 704 2	connection piece		1	
16	900 175 020 02	banjo bolt		1	
17	931 110 157 02	rubber sleeve	80	1	M31.01/02
18	999 512 350 02	hose clamp LA 80 X 100	80	2	M31.01/02
19	931 110 379 00	sealing ring	81-	1	M31.03/04
20	999 701 477 40	round seal 71,2 X 5,7	81-	1	M31.03/04

Pos	Part Number	Name	Remarks	Qty	Model
21	900 075 085 02	hexagon-head bolt M 8 X 20		3	
22	900 025 007 02	washer A 8,4		3	
23	N 012 241 8	spring washer B 8		3	
24	931 110 175 00	line		1	TURBO/GT
25	931 110 185 01	hose		1	TURBO/GT
-	999 239 007 40	hose 15 X 24		*	TURBO/GT
26	-	40 MM		1	
27	999 512 254 02	hose clamp S 24/9		4	TURBO/GT
28	931 123 155 00	bleeder valve		1	TURBO/GT
29	931 110 363 00	screw socket	81-	1	TURBO
30	999 230 164 02	nipple	81-	1	TURBO
31	900 123 033 20	sealing ring A 10 X 13,5	81-	2	TURBO
32	999 512 349 02	hose clamp LB 50 - 70	82-	2	M31.03/04
		- -- E N D -- -			

Pos	Part Number	Name	Remarks	Qty	Model

Model	Year	MG	SG	Illustration	Restrictions	Update			
924	85	1	07	107-35		187	11:50	06.04.2005	PORSCHE PET PORSCHE

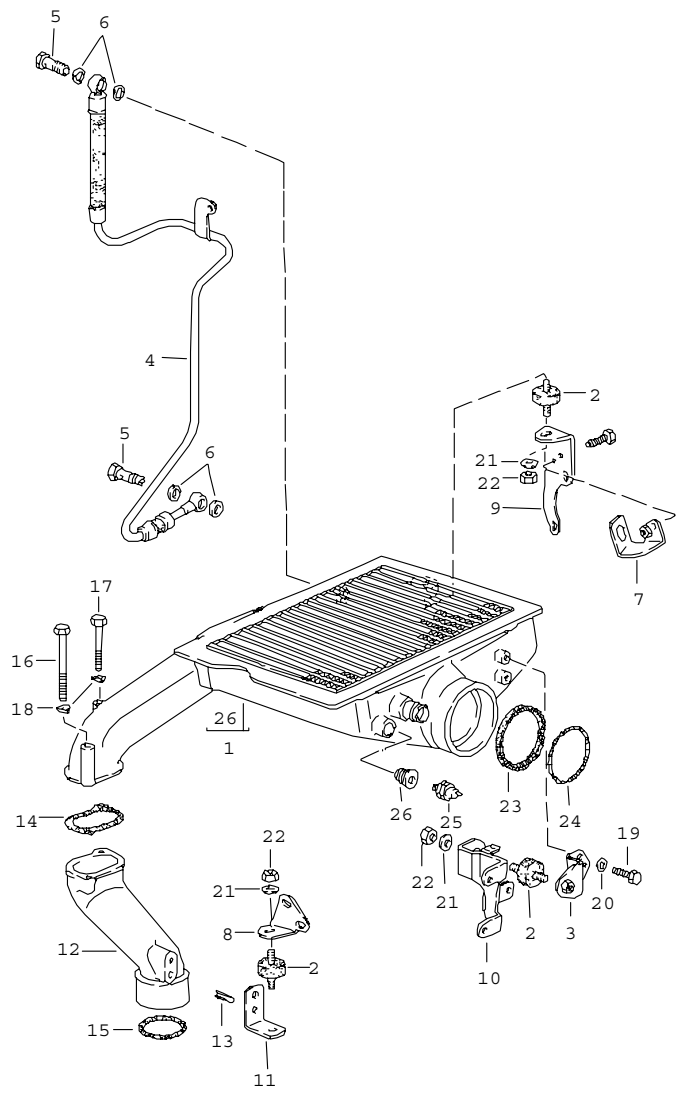

Pos	Part Number	Name	Remarks	Qty	Model
		charge air cooler			GT
1	931 110 033 04	charge air cooler		1	
2	931 110 136 00	bonded rubber buffer		1	
3	931 110 134 00	retaining bracket		1	
4	931 123 136 05	control line		1	
5	900 175 020 02	banjo bolt		2	
6	900 123 043 30	sealing ring A 12 X 15,5		4	
7	932 110 210 01	support	/RL	1	
8	931 110 261 00	support		1	
9	931 110 209 04	retaining bracket		1	
10	931 110 207 03	retaining bracket	/LL	1	
(10)	932 110 131 01	retaining bracket	/RL	1	
11	931 110 260 00	support		1	
12	931 110 160 02	pressure pipe		1	
13	E 900 095 031 00	tensioning sleeve 6 X 16		1	
14	* 931 110 152 01	gasket		1	
15	* 999 701 473 40	round seal 47 X 5,7		1	
16	N 010 313 4	hexagon-head bolt M 6 X 85		1	
17	N 010 366 4	hexagon-head bolt M 6 X 55		1	
18	N 012 226 5	spring washer B 6		2	
19	N 010 215 13	hexagon-head bolt M 6 X 15		2	
20	N 011 524 7	washer A 6,4		2	
21	900 025 007 02	washer A 8,4		4	
22	900 076 025 02	hexagon nut M 8		2	

Model	Year	MG	SG	Illustration	Restrictions	Update			
924	85	1	07	107-35		187	11:50	06.04.2005	PORSCHE PET PORSCHE

Pos	Part Number	Name	Remarks	Qty	Model	Pos	Part Number	Name	Remarks	Qty	Model
23	931 110 379 00	sealing ring		1							
24	999 701 477 40	round seal		1							
25	930 606 101 00	switch		1							
26	930 110 367 01	threaded insert		1							
--	930 110 212 01	connecting piece		1							
		- -- E N D -- -									

Model	Year	MG	SG	Illustration	Restrictions	Update	11:50	06.04.2005	PORSCHE PET PORSCHE
924	85	1	09	109-00		187			

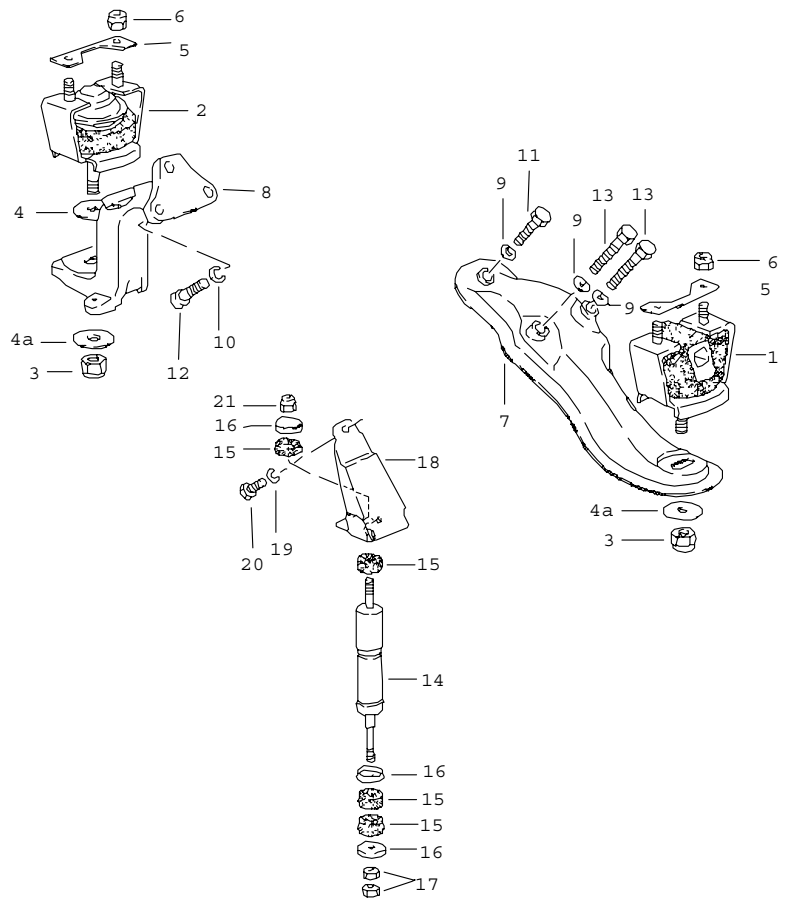

Pos	Part Number	Name	Remarks	Qty	Model
		engine suspension			
1	E 477 199 301	bonded rubber mounting	/L	1	924
(1)	E 477 199 301 A	bonded rubber mounting	/L	1	TURBO/GT
2	477 199 303	bonded rubber mounting	/R	1	
3	N 021 131 1	lock nut VM 12		2	
4	803 199 347	washer 13 X 31		1	
4A	999 025 119 02	washer		2	
5	477 199 311 A	plate		2	
6	N 022 149 2	lock nut VM 10		4	
7	477 199 305 C	bracket	/L	1	924
(7)	931 375 021 01	bracket	/L/LL	1	TURBO/GT
(7)	931 375 021 01	bracket	/L/LL	1	TURBO/GT
7	477 199 305 C	bracket	/L/RL	1	TURBO/GT
8	477 199 308 C	bracket	/R	1	924
(8)	931 375 124 00	bracket	/R/LL	1	TURBO/GT
8	477 199 308 C	bracket	/R/RL	1	TURBO/GT
9	N 012 231 1	spring washer A 10		3	
10	900 027 016 02	lock ring B 10		3	
11	N 010 445 3	hexagon-head bolt M 10 X 45		1	
12	N 014 721 2	pan-head screw M 10 X 25		3	
13	N 010 460 2	hexagon-head bolt M 10 X 60		2	
-	E 931 375 901 00	installation set vibration damper for subsequent installat.	/LL	1	TURBO/GT
		- -- E N D -- -			

Model	Year	MG	SG	Illustration	Restrictions	Update		
924	85	1	98	REP		187	9:36	12.04.2005

Pos	Part Number	Name	Remarks	Qty	Model
		repair kits			
>>	> 060 198 011	set of seals for cylinder block comprising:		1	
-	059 103 051 D	sealing ring		1	
-	E 048 115 147	sealing ring gasket gasket gasket		1 2 1 1	
-	046 115 189 A	gasket		1	
-	048 115 257	gasket o-ring		1 1	
-	046 121 041 A	gasket		1	
-	038 121 119 B	sealing ring		1	
-	N 043 854 1	sealing ring		1	
>>	> 047 198 012 A	set of seals for cylinder head comprising:		1	924 XJ XK VC
-	068 103 085 A	sealing ring		1	
-	048 103 095	sealing ring		1	
-	931 104 337 06	cylinder head gasket		1	
-	060 198 025 A	set of seals		1	
-	046 109 675 A	valve stem seal with assembly sleeve		8	
-	048 121 127 A	gasket		1	
-	059 127 311 A	gasket		1	
-	048 129 589 A	gasket		4	
-	477 133 227	gasket		1	
-	048 905 341 B	gasket		1	
-	056 905 261	gasket		1	
>>	> 931 100 901 00	set of seals for cylinder head comprising:		1	TURBO/GT
-	068 103 085 A	sealing ring		1	

Model	Year	MG	SG	Illustration	Restrictions	Update		
924	85	1	98	REP		187	9:36	12.04.2005

Pos	Part Number	Name	Remarks	Qty	Model
-	048 103 095	sealing ring		1	
-	060 198 025 A	set of seals		1	
-	931 104 337 06	cylinder head gasket		1	
-	046 109 675 A	valve stem seal with assembly sleeve		8	
-	931 110 147 00	gasket		4	
-	931 110 152 01	gasket		1	
-	930 111 191 01	gasket		4	
-	048 121 127 A	gasket		1	
-	048 905 341 B	gasket		1	
-	993 111 195 00	sealing ring		1	
-	931 123 193 05	gasket		1	
-	931 111 191 10	gasket		1	
-	999 701 473 40	round seal		1	
-	056 905 261	gasket		1	
>>	> 060 198 041 A	set of seals for oil sump comprising: gasket gasket gasket gasket		1 1 1 1 2	
-	N 043 854 1	sealing ring		1	
>>	> 060 198 025 A	set of seals for cylinder head cover comprising: sealing strip gasket		1 2 2	
>>	> 060 198 151	set of piston rings 86,50 MM comprising: piston ring groove 1 piston ring groove 2 oil scraper ring		X 1 1 1	924 XJ XK VC

Model	Year	MG	SG	Illustration	Restrictions	Update		
924	85	1	98	REP		187	9:36	12.04.2005

Pos	Part Number	Name	Remarks	Qty	Model
>>	> 060 198 153	set of piston rings 86,75 MM comprising: piston ring groove 1 piston ring groove 2 oil scraper ring		X 1 1 1	924 XJ XK VC
>>	> 060 198 155	set of piston rings 87,00 MM comprising: piston ring groove 1 piston ring groove 2 oil scraper ring		X 1 1 1	924 XJ XK VC
>>	> 931 103 901 00	set of piston rings 86,50 MM comprising: plain compression ring compression ring d-sf ring	80	X 1 1 1	M31.01/02
>>	> 931 103 901 01	set of piston rings 86,50 MM comprising: plain compression ring compression ring d-sf ring	81-	X 1 1 1	M31.03/04 M31.04/50
>>	> 931 103 901 25	set of piston rings 86,75 MM comprising: plain compression ring compression ring d-sf ring	80	X 1 1 1	M31.01/02
>>	> 931 103 901 26	set of piston rings 86,75 MM comprising: plain compression ring compression ring d-sf ring	81-	X 1 1 1	M31.03 M31.04/50
>>	> 931 103 901 50	set of piston rings 87,00 MM comprising: plain compression ring compression ring d-sf ring	80	X 1 1 1	M31.01/02
>>	> 931 103 901 51	set of piston rings 87,00 MM comprising: plain compression ring compression ring d-sf ring	81-	X 1 1 1	M31.03 M31.04/50

Model	Year	MG	SG	Illustration	Restrictions	Update		
924	85	1	98	REP		187	9:36	12.04.2005

Pos	Part Number	Name	Remarks	Qty	Model
>>	> 931 103 901 75	set of piston rings 87,50 MM comprising: plain compression ring compression ring d-sf ring	80	X 1 1 1	M31.01/02
>>	> 931 103 901 76	set of piston rings 87,50 MM comprising: plain compression ring compression ring d-sf ring	81-	X 1 1 1	M31.03 M31.04/50
>>	> 046 198 401	connecting rod 1 set comprising: connecting rod		1 4	
-	E 059 105 425 A	connecting rod bolt		8	
-	059 105 427 A	hexagon nut		8	
-	E 059 105 431	connecting rod bush		4	
>>	> 046 105 701	connecting-rod bearing 1 set comprising:		1	
-	E 046 105 701	connecting-rod bearing		8	
>>	> 046 198 503 A	connecting-rod bearing 1 set undersize 0,25 mm comprising:		1	
-	E 046 105 707	connecting-rod bearing		8	
>>	> 046 198 505 A	connecting-rod bearing 1 set undersize 0,50 mm comprising:		1	
-	E 046 105 713	connecting-rod bearing		8	
>>	> 046 105 719	connecting-rod bearing 1 set undersize 0,75 mm comprising:		1	
-	046 105 719	connecting-rod bearing		8	
>>	> 046 198 451	crankshaft bearing 1 set comprising:		1	
-	046 105 501	crankshaft bearing thrust bearing		2	

Model	Year	MG	SG	Illustration	Restrictions	Update		
924	85	1	98	REP		187	9:36	12.04.2005

Pos	Part Number	Name	Remarks	Qty	Model
-	046 105 561	crankshaft bearing upper numbers 1,2,4,5		4	
-	046 105 591	crankshaft bearing lower numbers 1,2,4,5		4	
>>	> 046 198 453	crankshaft bearing 1 set undersize 0,25 mm comprising:		1	
-	046 105 507	crankshaft bearing thrust bearing		2	
-	046 105 567	crankshaft bearing upper numbers 1,2,4,5		4	
-	E 046 105 597	crankshaft bearing lower numbers 1,2,4,5		4	
>>	> 046 198 455	crankshaft bearing 1 set undersize 0,50 mm comprising:		1	
-	046 105 513	crankshaft bearing thrust bearing		2	
-	046 105 573	crankshaft bearing upper numbers 1,2,4,5		4	
-	046 105 603	crankshaft bearing lower numbers 1,2,4,5		4	
>>	> 046 198 457	crankshaft bearing 1 set undersize 0,75 mm comprising:		1	
-	046 105 519	crankshaft bearing thrust bearing		2	
-	046 105 579	crankshaft bearing upper numbers 1,2,4,5		4	
-	046 105 609	crankshaft bearing lower numbers 1,2,4,5		4	
>>	> 047 198 950	maintenance set for 20,000 km intervals comprising:	80-	1	924 XJ XK
-	060 198 025 A	set of seals		1	

Model	Year	MG	SG	Illustration	Restrictions	Update		
924	85	1	98	REP		187	9:36	12.04.2005

Pos	Part Number	Name	Remarks	Qty	Model
-	N 043 854 1	sealing ring		1	
-	021 129 620	air cleaner cartridge		1	
-	931 107 701 00	oil filter		1	
-	930 110 076 00	fuel filter		1	
-	999 170 165 90	spark plug		4	
>>	> 931 100 930 00	maintenance set for 20,000 km intervals comprising:	80	1	TURBO M31.01
-	060 198 025 A	set of seals		1	
-	N 043 854 1	sealing ring		1	
-	931 110 152 01	gasket		1	
-	931 110 121 00	air cleaner cartridge		1	
-	931 107 701 00	oil filter		1	
-	931 110 149 04	fuel filter		1	
-	999 170 140 90	spark plug		4	
>>	> 931 100 930 01	maintenance set for 20,000 km intervals comprising:	81-	1	TURBO/GT M31.03/50
-	999 701 473 40	round seal		1	
-	999 701 477 40	round seal		1	
-	060 198 025 A	set of seals		1	
-	N 043 854 1	sealing ring		1	
-	931 110 152 01	gasket		1	
-	931 110 121 00	air cleaner cartridge		1	
-	931 107 701 00	oil filter		1	
-	931 110 149 04	fuel filter		1	
-	999 170 140 90	spark plug		4	
		vibration damper for subsequent installat.			
>>	> 931 375 901 00	installation set comprising:	/LL	1	TURBO/GT
-	E 477 199 501 A	vibration damper	/R	1	
-	E 477 199 501 B	vibration damper	/L	1	
-	477 199 143	cover plate	/R	1	

Model	Year	MG	SG	Illustration	Restrictions	Update		
924	85	1	98	REP		187	9:36	12.04.2005

Pos	Part Number	Name	Remarks	Qty	Model
-	E 999 512 311 02	clip	/R	1	
-	928 375 166 01	rubber buffer		4	
-	928 375 167 01	washer		2	
-	900 910 010 09	lock nut		2	
-	N 010 023 2	hexagon-head bolt		1	
-	E N 010 440 3	hexagon-head bolt		1	
-	N 011 527 12	washer		2	
-	N 022 149 2	lock nut		1	
-	N 011 525 13	washer		1	
		- -- E N D -- -			

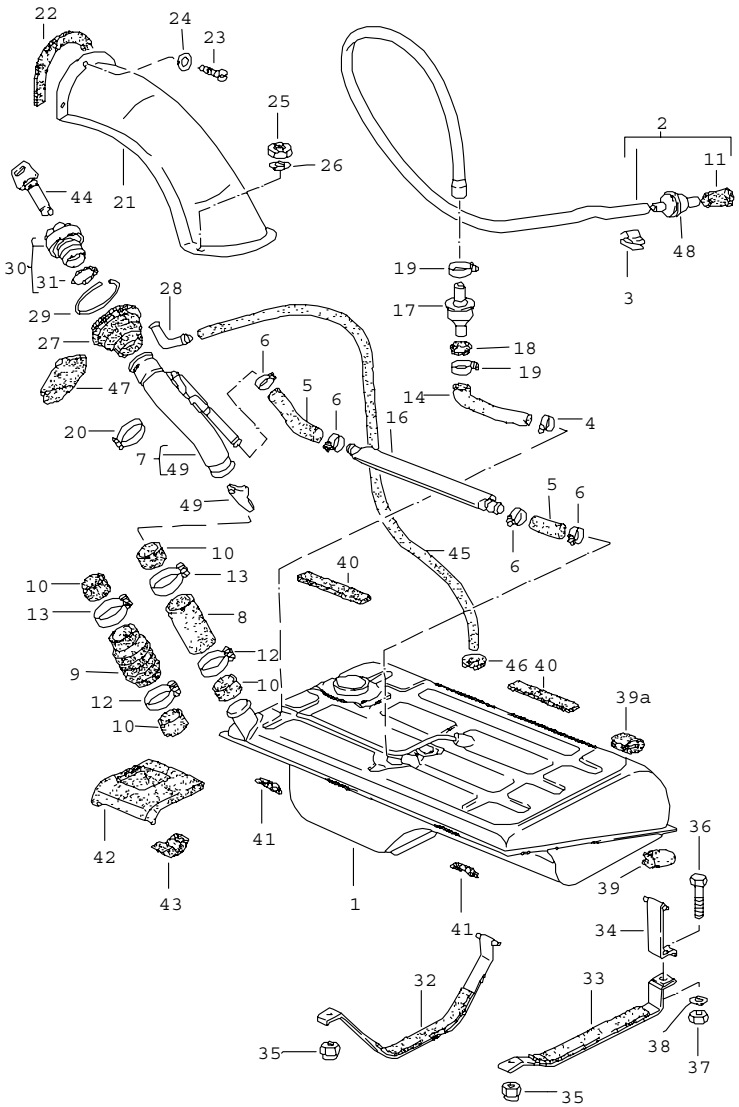

Pos	Part Number	Name	Remarks	Qty	Model
		fuel tank F >>92CN4 02197 F >>93CN1 00305 F >>93BN7 00450			
1	477 201 021 F	fuel tank 62 liters model year 80/81 use also: 931.201.049.00 N.020.378.1		1	
1	E 937 201 021 01	fuel tank 84 litres model year 80/81 use also: 931.201.049.00 N.020.378.1	81	1	TURBO/GT
2	477 201 115 A	breather hose		1	
3	477 971 939	cable terminal		3	
4	N 023 558 1	hose clamp A 9 X 10		1	
-	N 020 363 1	hose		*	
5	-	15 X 2,5 MM			
6	N 024 125 2	hose clamp A 9 X 19		4	
7	944 201 039 00	filler neck		1	
8	N 901 235 01	hose shorten 50 MM		1	
10	944 201 217 00	hose		2	
11	321 201 890 A	end piece		1	
12	999 512 348 02	hose clamp LA 40-60		1	
13	111 501 159 B	hose clamp LA 44-64		1	
14	477 201 159 B	breather hose		1	
16	E 477 201 035	expansion tank		1	
17	928 201 083 02	shut-off valve		1	

Pos	Part Number	Name	Remarks	Qty	Model
18	111 971 911 A	rubber sleeve		1	
19	N 023 570 2	hose clamp A 9 X 15		2	
20	N 020 902 1	tie-wrap 6,5 X 210		1	
21	477 201 347 C	cover		1	
22	477 201 351 A	gasket		1	
23	N 013 959 3	tapping screw B 3,5 X 16		3	
24	900 151 028 02	washer 4,3		3	
25	N 011 005 14	hexagon nut M 5		2	
26	900 025 003 02	washer A 5,3		2	
27	477 201 281 B	sleeve		1	
28	477 201 283 A	connection piece		1	
29	900 906 045 03	snap ring A 105		1	
30	944 201 061 01	fuel tank cap without lock cylinder		1	
31	944 201 553 00	gasket		1	
32	477 201 302	restraining strap	/R	1	
(32)	937 201 302 00	restraining strap	/R 81	1	TURBO/GT
33	477 201 311 B	restraining strap	/L	1	
34	477 201 395	restraining strap	/L	1	
35	311 101 463	hexagon nut M 8		2	
36	N 010 335 5	hexagon-head bolt M 8 X 35		1	
37	900 910 022 09	lock nut M 8		1	
38	N 011 525 13	washer A 8,4		1	
39	481 201 647	intermediate piece		2	
39A	944 201 647 00	intermediate piece		2	
40	477 201 295 B	intermediate layer		4	
41	477 201 295 B	intermediate layer		1	
42	477 863 160	gasket		1	
43	477 863 162 A	sound absorber		1	
44	477 201 594	lock cylinder with keys w/o stipulated lock number		1	
44	477 201 594 A	lock cylinder with 1 key state lock number		1	
45	477 201 393 A	hose		1	
46	021 119 569	rubber sleeve		1	
47	928 201 057 02	protective flap	81	1	
48	810 201 186 A	bleeder valve	81	1	
49	931 201 359 02	flap		1	
		- -- E N D -- -			

Model	Year	MG	SG	Illustration	Restrictions	Update				
924	85	2	01	201-01		187	11:50	06.04.2005	PORSCHE	PET	PORSCHE

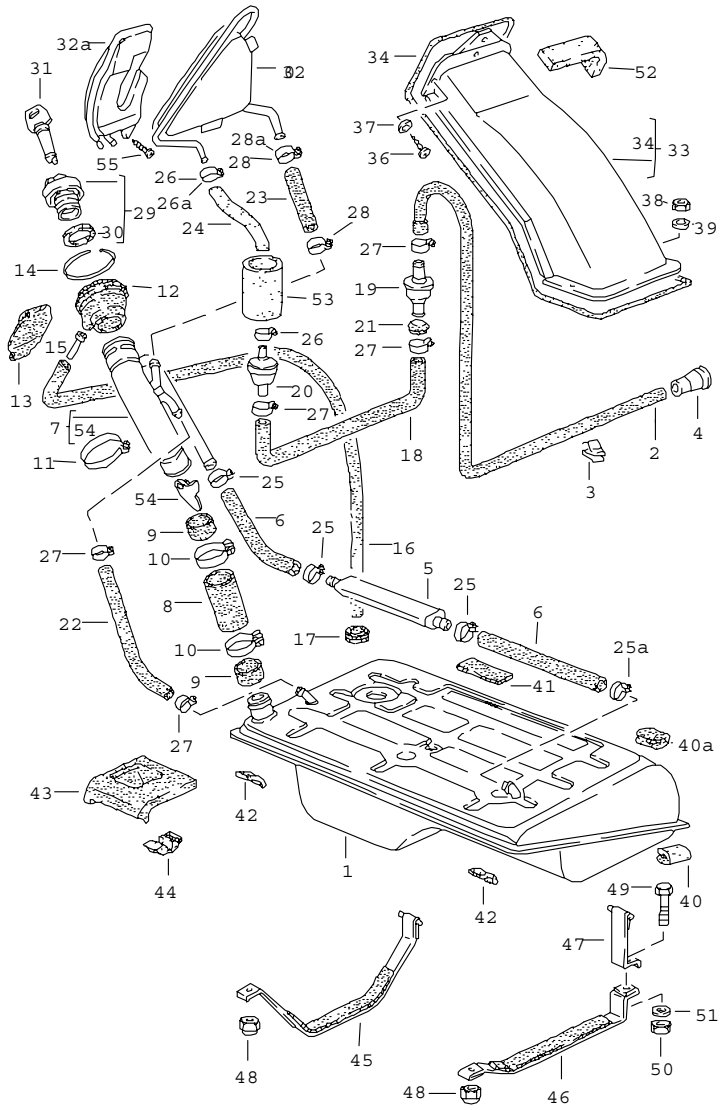

Pos	Part Number	Name	Remarks	Qty	Model
		fuel tank F 92CN4 02198>> F 93CN1 00306>>			
1	477 201 021 F	fuel tank		1	
(1)	E 937 201 021 01	fuel tank 84 litres		1	TURBO
2	944 201 159 01	breather hose shorten 430 MM		1	
3	477 971 939	cable terminal		3	
4	321 201 890 A	end piece		1	
5	E 477 201 035	expansion tank		1	
-	N 020 363 1	hose		*	
6	-	15 X 2,5 MM			
7	944 201 039 00	filler neck		1	
8	N 901 235 01	hose shorten 30 MM		1	
9	944 201 217 00	hose		2	
10	111 501 159 B	hose clamp LA 44-64		2	
11	999 513 003 40	tie-wrap		1	
12	477 201 281 B	sleeve		1	
13	928 201 057 02	protective flap		1	
14	900 906 045 03	snap ring B 105		1	
15	477 201 283 A	connection piece		1	
16	477 201 393 A	hose		1	
17	021 119 569	rubber sleeve		1	
18	944 201 449 00	hose		1	
19	928 201 083 02	shut-off valve		1	
20	810 201 186 A	bleeder valve		1	
21	111 971 911 A	rubber sleeve		1	

Pos	Part Number	Name	Remarks	Qty	Model
-	N 020 378 1	hose 10 X 2,5		*	
22	-	270 MM		1	
-	N 020 362 1	hose 15 X 2,5		*	
23	-	80 MM	-83	1	
23	999 181 354 40	hose	84-	1	
-	N 020 379 1	hose 6 X 2,5		*	
24	-	285 MM	-83	1	
(24)	944 201 453 01	hose	84-	1	
25	N 024 125 2	hose clamp A 9 X 19		3	
25A	N 023 565 3	hose clamp A 9 X 21		1	
26	N 024 528 1	clip LC 8-12	-83	2	
26A	999 512 160 02	hose clamp 9 X 13	84-	1	
27	N 023 570 2	hose clamp A 9 X 15		5	
28	N 023 569 2	hose clamp AR 9 X 16		2	
28A	999 512 198 02	hose clamp 9 X 17	84-	1	
29	944 201 061 01	fuel tank cap without lock cylinder		1	
30	944 201 553 00	gasket		1	
31	477 201 594	lock cylinder with keys w/o stipulated lock number		1	
31	477 201 594 A	lock cylinder with 1 key with stipulated lock-no.		1	
32	944 201 041 00	expansion tank	-83	1	
32A	944 201 041 03	expansion tank	84-	1	
33	944 201 047 03	cover		1	

Pos	Part Number	Name	Remarks	Qty	Model
-	000 043 202 08	packing cord		*	
34	-	$ 4 MM		1	
36	N 013 957 5	tapping screw B 3,5 X 9,5		5	
37	900 151 028 02	washer 4,3		3	
38	N 011 005 14	hexagon nut M 5		2	
39	900 025 003 02	washer A 5,3		2	
40	481 201 647	intermediate piece		2	
40A	944 201 647 00	intermediate piece		2	
41	477 201 295 B	intermediate layer		4	
42	477 201 295 B	intermediate layer		2	
43	477 863 160	gasket		1	
43	477 863 160 A	gasket	83-	1	(AUS)
44	477 863 162 A	sound absorber		1	
45	477 201 302	restraining strap	/R	1	
(45)	937 201 302 00	restraining strap	/R	1	TURBO
46	477 201 311 B	restraining strap	/L	1	
47	477 201 395	restraining strap	/L	1	
48	311 101 463	hexagon nut M 8		2	
49	N 010 335 5	hexagon-head bolt M 8 X 35		1	
50	900 910 022 09	lock nut M 8		1	
51	N 011 525 13	washer A 8,4		1	
-	000 043 205 05	sound absorber		*	
52	-	100 MM		1	
-	999 181 046 40	insulating hose		*	
53	-	60 MM		1	

Pos	Part Number	Name	Remarks	Qty	Model
54	931 201 359 02	flap		1	
55	N 043 864 1	screw BM 3 X 6	84-	1	
		- -- E N D -- -			

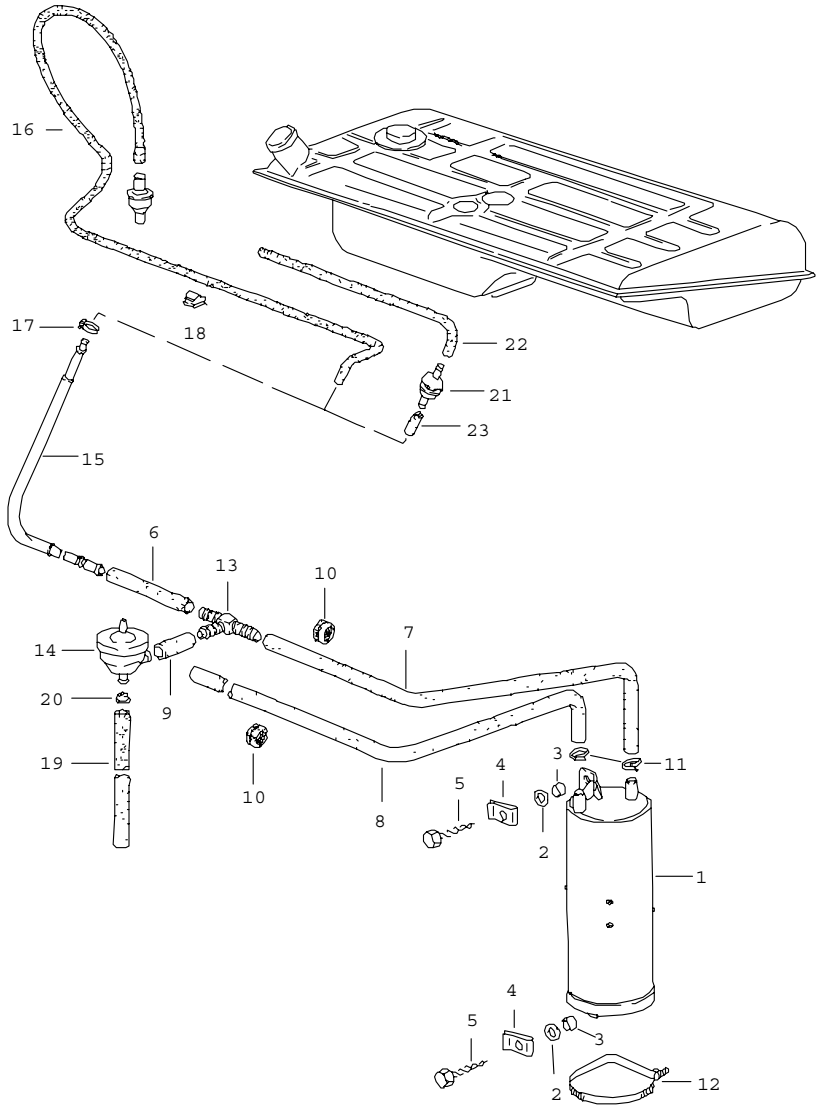

Pos	Part Number	Name	Remarks	Qty	Model
		carbon canister			
		tank ventilation (USA) (CDN) (J) (AUS)			
1	993 201 221 01	carbon canister		1	
2	900 151 029 02	washer 6,1		2	
3	477 201 279	sleeve		2	
4	N 015 433 1	speed nut B 6,3		2	
5	N 013 891 1	tapping screw B 6,3 X 19		2	
-	999 181 716 50	hose 9,5 X 15,5		*	
6	-	150 MM		1	
-	N 020 374 1	hose 12 X 3,3		*	
7	-	460 MM		1	
8	-	850 MM		1	924
(8)	-	1090 MM		1	TURBO
9	-	40 MM		1	
10	021 119 569 A	rubber sleeve		2	
11	999 512 265 02	hose clamp		2	
12	N 020 906 3	tie-wrap 6,5 X 450		1	
13	477 201 767 B	t-piece		1	
14	928 110 429 03	vacuum valve	-80	1	
14	928 110 429 06	vacuum valve	81-	1	
15	477 201 743 D	pipeline	-80	1	
(15)	477 201 743 C	pipeline	81	1	
15	477 201 743 D	pipeline	82-	1	
16	477 201 159 C	breather hose	-81	1	
16	944 201 159 01	breather hose	82-	1	

Pos	Part Number	Name	Remarks	Qty	Model
17	N 023 558 1	hose clamp A 9 X 10		1	
18	477 971 939	cable terminal		4	
-	999 239 016 40	hose 13 X 18		*	
19	-	1060 MM		1	
20	E 928 110 523 01	restrictor	-80	1	
21	810 201 186 A	bleeder valve	81	1	
22	E 477 201 189	breather hose	81	1	
-	N 020 359 1	hose 15 X 2,5	81	*	
23	-	80 MM		1	
		- -- E N D -- -			

Pos	Part Number	Name	Remarks	Qty	Model

Model	Year	MG	SG	Illustration	Restrictions	Update			
924	85	2	01	201-15		187	11:51	06.04.2005	PORSCHE PET PORSCHE

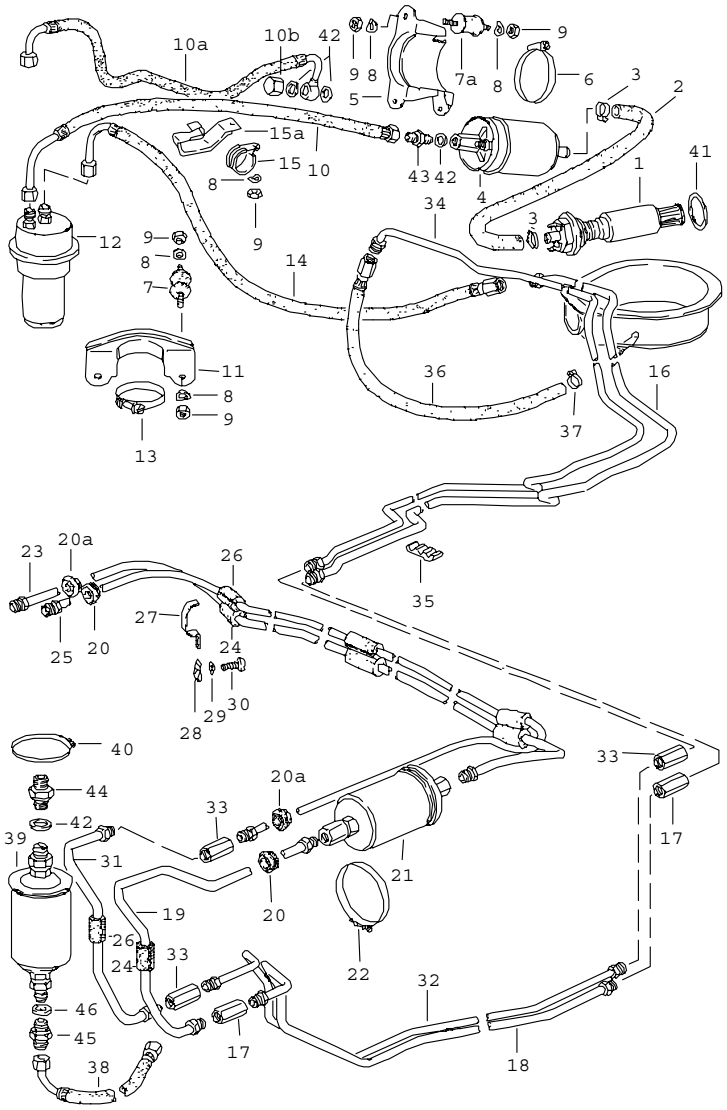

Pos	Part Number	Name	Remarks	Qty	Model
		fuel system			
1	928 608 013 00	in-tank fuel pump		1	
2	477 209 199 D	fuel hose		1	
(2)	477 209 191	fuel hose	81-	1	TURBO/GT
3	N 023 526 2	hose clamp A 9 X 18		2	
4	911 608 102 00	fuel pump	80	1	
(4)	911 608 102 02	fuel pump	81-	1	
5	E 477 209 295 A	support		1	
6	999 512 394 00	hose clamp		1	
7	944 610 115 00	bonded rubber mounting		2	
7A	944 610 115 00	bonded rubber mounting		3	
8	N 012 226 5	spring washer B 6		10	
9	900 076 010 02	hexagon nut M 6		10	
10	477 209 093 A	fuel hose		1	
10A	477 209 093 C	fuel hose	81-	1	
10A	477 209 093 E	fuel hose	82-	1	
10B	N 011 069 1	cap nut M 12 X 1,5	81-	1	
11	E 477 209 291	support		1	
12	931 110 140 00	pressure accumulator 40 CCM		1	
13	999 512 199 02	clip		1	
14	477 209 047 B	fuel hose		1	
15	N 020 690 1	hose clamp		1	
15A	944 356 593 01	support	83-	1	
16	477 209 178 A	fuel line		1	
17	477 209 169	connecting piece		2	
18	477 209 177 A	fuel line		1	
19	477 209 033 A	fuel line	/LL	1	TURBO/GT

Pos	Part Number	Name	Remarks	Qty	Model
(19)	478 209 033 A	fuel line	/RL	1	TURBO/GT
20	999 702 087 50	rubber sleeve		2	TURBO/GT
20A	999 702 120 50	rubber sleeve		2	TURBO/GT
21	931 110 149 04	fuel filter		1	TURBO/GT
22	N 024 316 1	hose clamp 12 X 35		1	TURBO/GT
23	477 209 057	fuel line	/LL	1	TURBO/GT
(23)	478 209 057 A	fuel line	/RL	1	TURBO/GT
(23)	478 209 055	fuel line	/RL	1	TURBO/GT
24	477 209 303	hose piece		4	TURBO/GT
25	477 209 059 A	fuel line return	/LL	1	TURBO/GT
(25)	478 209 059 A	return	/RL	1	TURBO/GT
26	477 209 305	hose piece		4	TURBO/GT
27	477 209 307	clip		3	TURBO/GT
28	N 015 458 1	speed nut B 4,8 X 20		3	TURBO/GT TURBO/GT
29	900 025 003 02	washer A 5,3		3	TURBO/GT
30	N 013 975 6	tapping screw B 4,8 X 19		3	TURBO/GT
31	477 209 035 A	fuel line return		1	TURBO/GT
32	477 209 175	fuel line return		1	
33	477 209 161	connecting piece		3	
34	477 209 176 A	fuel line return		1	
35	911 356 543 01	support		13	
(35)	944 356 591 00	support	82-	12	
36	477 209 071 C	fuel hose		1	
(36)	E 477 209 071 D	fuel hose	81-	1	TURBO/GT
37	N 023 577 2	hose clamp		1	
38	477 209 047 A	fuel hose		1	924
39	* 930 110 076 00	fuel filter		1	924
40	111 501 159 B	hose clamp 9 X 56		1	924
41	928 201 187 02	sealing ring		1	
42	N 013 812 3	sealing ring A 12 X 15,5		2	
43	N 020 704 2	connection piece	80	X	
(43)	911 608 951 00	check valve for fuel pump long neck	80	X	
(43)	893 906 093	retaining valve for fuel pump short neck	81-	1	
44	930 110 199 00	screw socket		1	924
45	930 110 198 00	screw socket		1	924
46	900 123 007 30	sealing ring A 14 X 18		1	924

- -- E N D -- -

Model	Year	MG	SG	Illustration	Restrictions	Update	11:52	06.04.2005	PORSCHE PET PORSCHE
924	85	2	02	202-00		187			

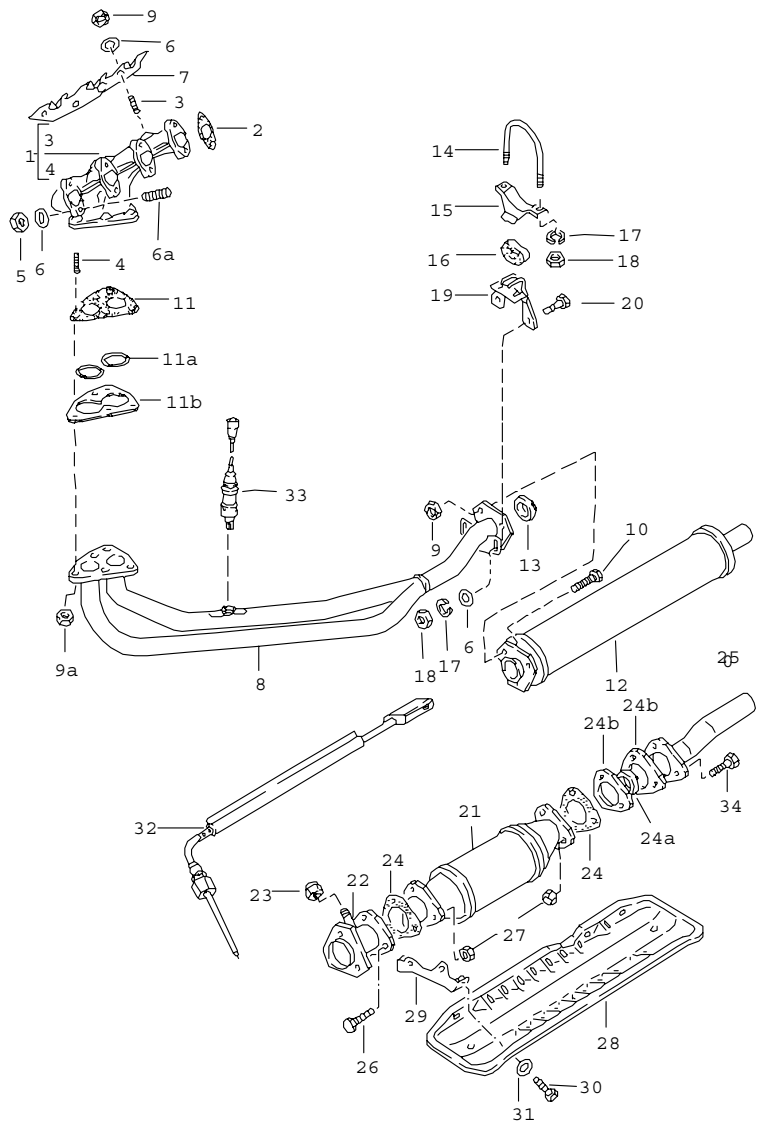

Pos	Part Number	Name	Remarks	Qty	Model
		exhaust system front muffler			924
1	048 129 587 D	exhaust manifold	/LL	1	
(1)	047 129 587 B	exhaust manifold	/RL	1	
2	* 048 129 589 A	gasket		4	
3	N 044 511 1	stud M 8 X 18		3	
4	N 044 514 4	stud M 8 X 25		5	
5	N 900 850 01	hexagon nut M 8		8	
6	N 011 525 13	washer A 8,4		11	
6A	N 044 411 5	stud M 8 X 30		8	
7	047 129 595 D	cover plate	/LL	1	
(7)	047 129 595 E	cover plate	/RL	1	
(8)	477 253 101 Q	exhaust pipe	/LL	1	
(8)	478 253 101 D	exhaust pipe	/RL	1	
9	803 253 111	lock nut M 8		6	
9A	311 101 463	hexagon nut M 8		5	
10	N 010 353 3	hexagon-head bolt M 8 X 42		3	
11	477 253 115 E	gasket	/LL	1	
(11)	478 253 115 D	gasket	/RL	1	
12	477 253 121 B	front muffler		1	
13	477 253 137	sealing ring		1	
14	477 253 139	clip		1	
15	944 111 307 00	support		1	
16	477 253 140 A	rubber mounting		1	
17	900 027 015 02	lock ring B 8		2	

Pos	Part Number	Name	Remarks	Qty	Model	Pos	Part Number	Name	Remarks	Qty	Model
18	N 011 008 8	hexagon nut M 8		2							
19	477 253 245	hook		1							
20	N 010 240 16	hexagon-head bolt M 8 X 20		2							
		cover plate see group 8/01/05									
		- -- E N D -- -									

Model	Year	MG	SG	Illustration	Restrictions	Update				
924	85	2	02	202-05		187	11:52	06.04.2005	PORSCHE	PET	PORSCHE

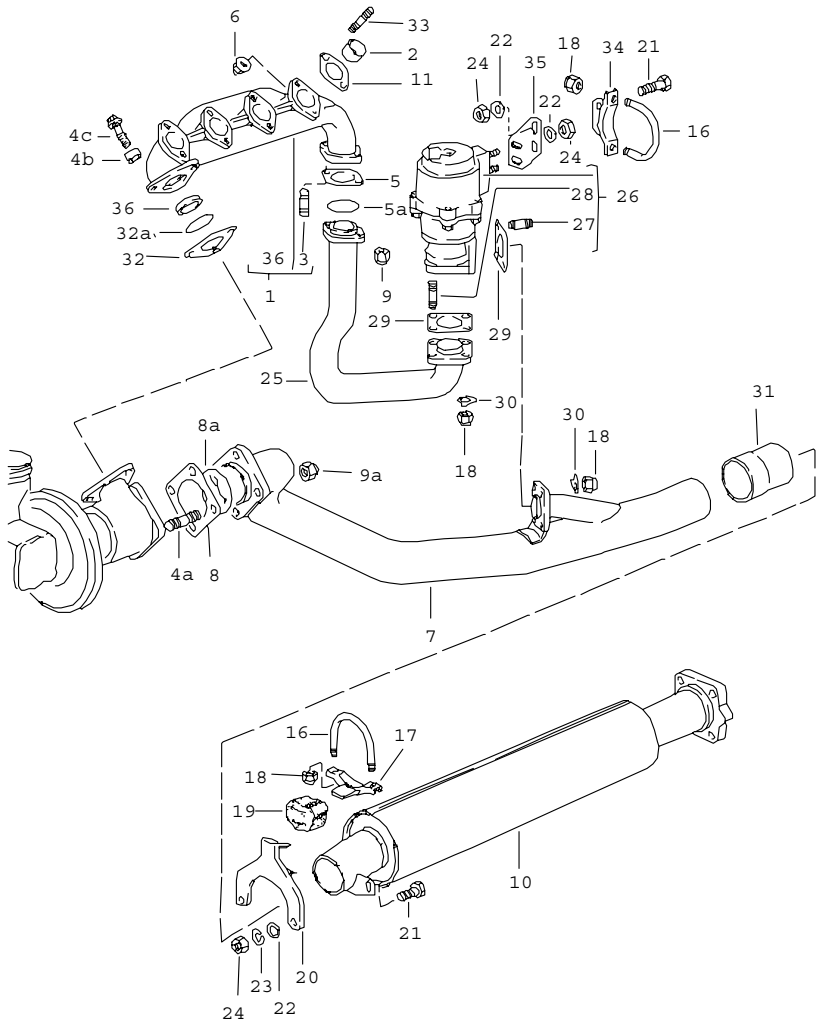

Pos	Part Number	Name	Remarks	Qty	Model
		exhaust system front muffler			TURBO/GT
		see technical information GR.2 NR 10/10A			
1	A 931 111 094 02	exhaust manifold	/RL 80	1	M31.01
1	931 111 096 00	exhaust manifold	/LL	1	
1	931 111 094 02	exhaust manifold	/RL	1	
2	931 111 132 00	intermediate piece		4	
3	900 081 051 02	stud M 10 X 35	80	2	M31.01
3	999 060 033 00	stud M 10 X 35	81-	2	M31.03/50
4	900 081 053 00	stud M 10 X 25		3	
4A	900 081 050 02	stud M 10 X 28		4	
4B	E 931 123 199 00	sleeve		3	
4C	931 123 197 00	shouldered bolt		3	
5	* 931 111 191 10	gasket		1	
5A	* 993 111 195 00	sealing ring		1	
6	999 084 611 02	lock nut M 8		8	
7	931 111 905 00	exhaust pipe		1	
8	931 111 192 02	gasket		1	
8A	* 944 111 205 02	gasket		1	
9	900 157 007 00	hexagon nut M 10		5	
9A	N 900 730 01	lock nut M 10		4	
10	931 111 901 00	front muffler		1	TURBO
(10)	931 111 901 01	front muffler	81	1	GT
11	* 930 111 191 01	gasket		4	
16	477 253 139	clip		2	
17	944 111 307 00	support		1	TURBO

Pos	Part Number	Name	Remarks	Qty	Model
18	900 910 097 02	lock nut VM 8		12	
19	477 253 140 A	rubber mounting		1	TURBO
20	931 111 061 02	hook		1	TURBO
21	N 010 240 16	hexagon-head bolt M 8 X 20		4	
22	900 025 007 02	washer A 8,4		4	
23	900 027 015 02	lock ring B 8		2	
24	900 076 025 02	hexagon nut M 8		4	
25	931 123 033 04	wastegate line		1	
26	930 123 060 10	wastegate	80	1	M31.01
26	931 123 066 07	wastegate	81-	1	M31.03
26	931 123 066 01	wastegate	81	1	M31.50
27	900 081 048 02	stud M 8 X 25		4	
28	900 081 049 02	stud M 8 X 32		4	
29	* 930 123 194 01	gasket		2	
30	999 039 001 00	tab washer		8	
31	931 111 902 00	sleeve		1	
32	* 931 123 193 02	gasket		1	
32A	* 993 111 195 00	sealing ring		1	
33	999 062 238 02	stud M 8 X 25		8	
34	931 123 143 01	support		1	
35	E 931 123 145 02	retaining bracket		1	
36	931 111 599 01	intermediate ring		1	
-	E 000 043 023 00	set of fastening parts for wastegate exhaust pipe		1	

Pos	Part Number	Name	Remarks	Qty	Model
		cover plate see group 8/01/05			
		- -- E N D -- -			

Model	Year	MG	SG	Illustration	Restrictions	Update				
924	85	2	02	202-15		187	11:53	06.04.2005	PORSCHE	PET	PORSCHE

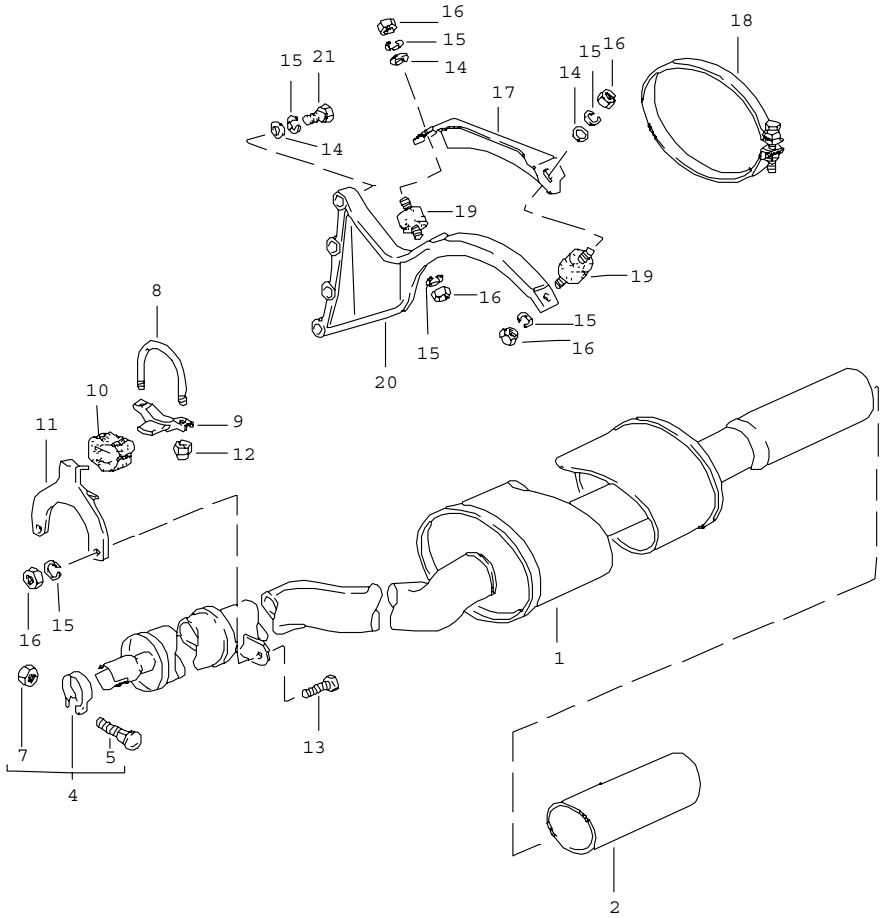

Pos	Part Number	Name	Remarks	Qty	Model
		exhaust system rear muffler			924
1	477 253 125 S	rear muffler		1	
(1)	477 253 125 AA	rear muffler		1	(S)
2	477 253 191 C	ornamental exhaust pipe chrome		1	
(2)	477 253 191 B	ornamental exhaust pipe black		1	(S)
4	A 191 253 139 G	clip		1	
4	191 253 139 G	clip		1	
5	N 902 064 01	round head screw M 10 X 50		1	
7	N 011 010 6	hexagon nut M 10		1	
8	477 253 139	clip		1	
9	944 111 307 00	support		1	
10	477 253 140 A	rubber mounting		1	
11	477 253 245	hook		1	
12	900 910 097 02	lock nut VM 8		2	
13	N 010 240 16	hexagon-head bolt M 8 X 20		2	
14	N 011 525 13	washer A 8,4		6	
15	900 027 015 02	lock ring B 8		6	
16	N 011 008 8	hexagon nut M 8		6	
17	477 253 253 D	retaining bracket		1	
18	477 253 325 A	clip		1	
19	477 253 149 C	bonded rubber buffer		2	
(19)	999 703 317 00	bonded rubber buffer with trailer coupling		2	
20	477 253 243	support		1	

Model	Year	MG	SG	Illustration	Restrictions	Update			
924	85	2	02	202-15		187	11:53	06.04.2005	PORSCHE PET PORSCHE

Pos	Part Number	Name	Remarks	Qty	Model	Pos	Part Number	Name	Remarks	Qty	Model
(20)	477 253 255 C	support	AUT.	1							
21	N 010 369 2	hexagon-head bolt M 8 X 58		4							
		cover plate see group 8/01/05									
		- -- E N D -- -									

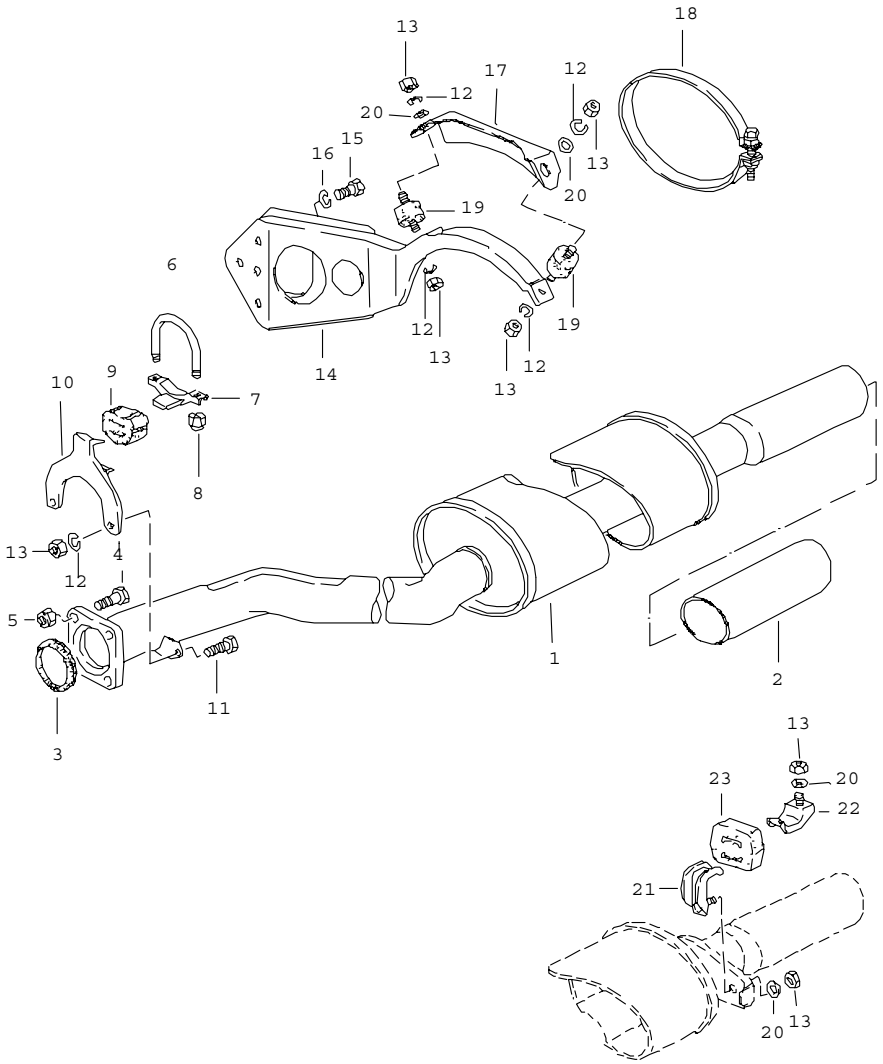

Pos	Part Number	Name	Remarks	Qty	Model
		exhaust system rear muffler			TURBO/GT
1	931 111 050 06	rear muffler		1	TURBO
(1)	931 111 050 05	rear muffler		1	TURBO (S)
(1) E	931 111 050 07	rear muffler	81	1	GT
2	477 253 191 C	ornamental exhaust pipe chrome		1	
3 *	928 111 244 03	sealing ring		1	
4	N 010 020 2	hexagon-head bolt M 10 X 38		4	
5	999 084 047 02	lock nut M 10		4	
6	477 253 139	clip		1	
7	944 111 307 00	support		1	
8	900 910 097 02	lock nut VM 8		2	
9	477 253 140 A	rubber mounting		1	
10	931 111 061 02	hook		1	
11	N 010 240 16	hexagon-head bolt M 8 X 20		2	
12	900 027 015 02	lock ring B 8		6	
13	900 076 025 02	hexagon nut M 8		6	
14	477 253 251	support		1	TURBO
15	N 010 253 7	hexagon-head bolt M 10 X 22		3	
16	900 027 016 02	lock ring B 10		3	
17	477 253 253 D	retaining bracket		1	TURBO
18	477 253 325 A	clip		1	TURBO
19	477 253 149 C	bonded rubber buffer		2	TURBO
(19)	999 703 317 00	bonded rubber buffer with trailer coupling		2	

Pos	Part Number	Name	Remarks	Qty	Model
20	900 025 007 02	washer 8,4		2	
21	931 111 264 01	hook	81	2	GT
22	931 111 121 01	hook	81	2	GT
23	928 111 259 02	rubber mounting	81	2	GT
		cover plate see group 8/01/05			
		- -- E N D -- -			

Pos	Part Number	Name	Remarks	Qty	Model

Model	Year	MG	SG	Illustration	Restrictions	Update				
924	85	2	02	202-25		187	11:53	06.04.2005	PORSCHE	PET	PORSCHE

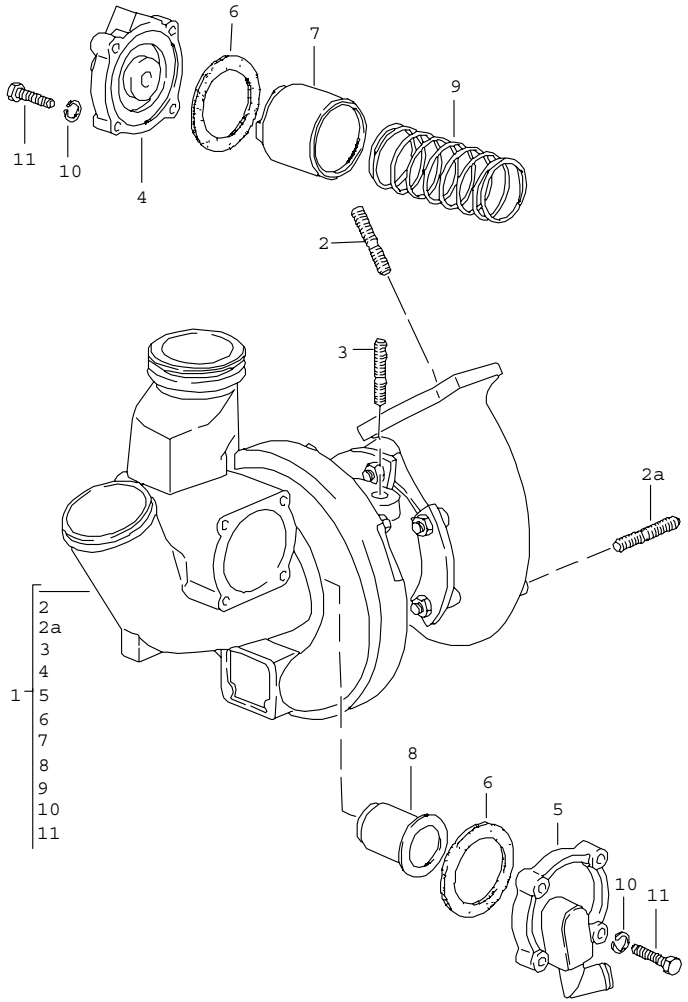

Pos	Part Number	Name	Remarks	Qty	Model
		turbocharger			TURBO/GT
1	> 931 123 002 09	turbocharger	80	1	M31.01
1	> 931 123 004 07	turbocharger	81-	1	M31.03/04
1	E 931 123 002 10	turbocharger	81	1	M31.50
2	900 081 053 00	stud M 10 X 25	80	2	M31.01/02
2A	900 081 050 02	stud M 10 X 28		4	
3	900 081 044 08	stud M 8 X 35		2	
4	930 110 156 06	cover		1	
5	931 110 056 00	cover		1	
6	930 110 149 00	gasket		2	
7	931 123 149 00	piston		1	
8	931 123 147 02	spring guide		1	
9	931 123 151 01	compression spring		1	
10	N 012 006 4	lock ring B 6		8	
11	N 010 220 3	hexagon-head bolt M 6 X 30		8	
		- -- E N D -- -			

Model	Year	MG	SG	Illustration	Restrictions	Update		
924	85	2	98	REP		187	9:40	12.04.2005

Pos	Part Number	Name	Remarks	Qty	Model
		repair kits			
>>	> 931 123 901 00	set of seals for turbocharger without mounting parts comprising:		1	TURBO/GT
-	900 123 106 30	sealing ring		4	
-	N 043 815 2	sealing ring		1	
-	931 110 152 01	gasket		1	
-	931 111 191 10	gasket		1	
-	944 111 205 02	gasket		1	
-	928 111 244 03	sealing ring		1	
-	900 123 008 30	sealing ring		3	
-	900 123 043 30	sealing ring		3	
-	900 123 084 30	sealing ring		1	
-	930 123 194 01	gasket		2	
-	993 111 195 00	sealing ring		2	
-	900 174 045 40	sealing ring		1	
-	999 701 473 40	round seal		1	
-	999 701 477 40	round seal		1	
-	999 707 043 40	o-ring		1	
-	999 701 621 40	o-ring		1	
>>	> 000 043 018 00	installation set for turbocharger comprising:		1	TURBO
		set of seals with mounting parts		1	
-	931 123 901 00	set of seals		1	
-	999 085 001 02	socket head nut		2	
-	N 900 730 01	lock nut		4	
-	931 123 197 00	shouldered bolt		3	
-	E 931 123 199 00	sleeve		3	
-	930 123 134 04	gasket		1	

Model	Year	MG	SG	Illustration	Restrictions	Update		
924	85	2	98	REP		187	9:40	12.04.2005

Pos	Part Number	Name	Remarks	Qty	Model
-	900 074 233 02	hexagon-head bolt M 6 X 40		2	
-	900 910 096 02	lock nut M 6		2	
-	N 010 020 2	hexagon-head bolt M 10 X 38		4	
-	999 084 047 02	lock nut M 10		4	
-	999 513 002 40	tie-wrap		1	
-	931 110 185 01	hose		1	
-	900 157 007 00	hexagon nut		1	
-	900 910 097 02	lock nut		4	
-	900 081 049 02	stud		4	
-	931 111 599 01	intermediate ring		1	
-	930 111 191 01	gasket		4	
-	999 084 611 02	lock nut		8	
>>	> 477 298 113	set of fastening parts for front muffler		1	924
>>	> 477 298 113 C	set of fastening parts for rear muffler		1	924
>>	> 477 298 113 D	set of fastening parts for front muffler and rear muffler		1	924
>>	> 477 298 113 E	set of fastening parts for front muffler		1	TURBO
>>	> 477 298 113 F	set of fastening parts for rear muffler		1	TURBO
>>	> 477 298 113 G	set of fastening parts for front muffler and rear muffler		1	TURBO
		- -- E N D -- -			

Model	Year	MG	SG	Illustration	Restrictions	Update			
924	85	3	01	301-00		187	11:53	06.04.2005	PORSCHE PET PORSCHE

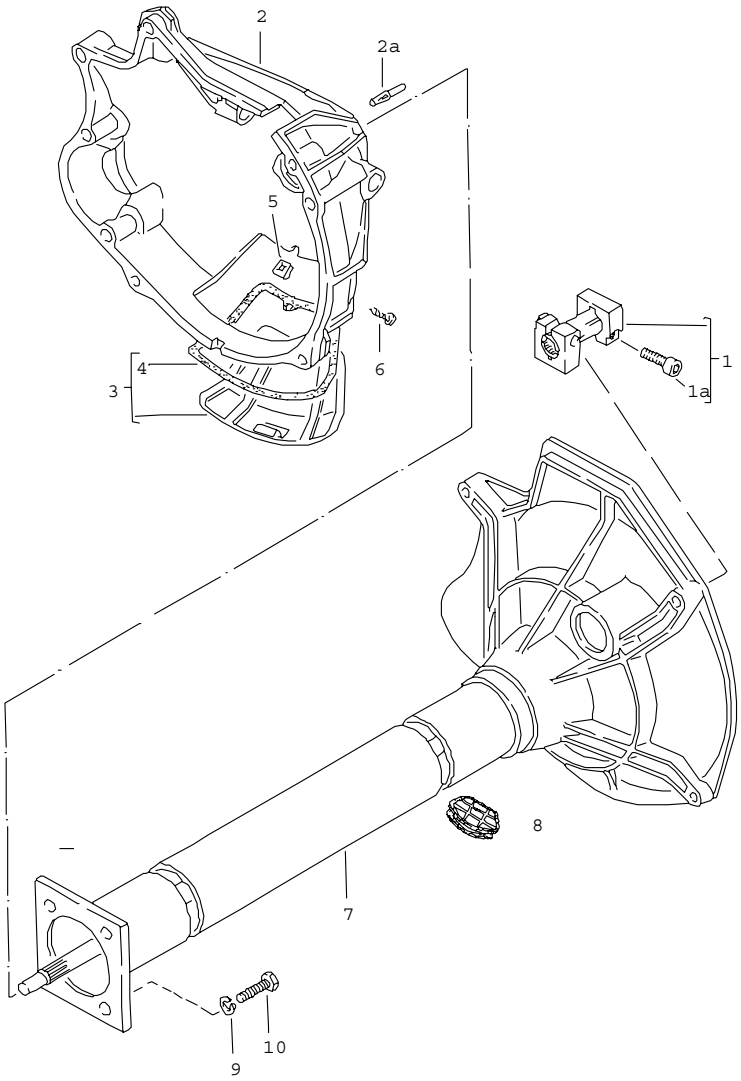

Pos	Part Number	Name	Remarks	Qty	Model
		central tube manual transmission VQ VR UV MD ME MF			924
1	477 521 145 A	clamping sleeve		1	
1A	477 521 501 A	pan-head screw		2	
2	477 521 211 B	clutch housing		1	
2A	N 012 690 1	grooved pin 10 X 32		3	
3	477 521 213	cover		1	
4	477 521 214	gasket		1	
5	999 591 327 02	speed nut B 6,3 X 23		1	
6	N 013 947 3	oval-head screw 6,3 X 19		1	
7	> 477 521 230 B	central tube ready for installation		1	
8	477 521 277 C	cap		1	
9	900 027 016 02	lock ring B 10		4	
10	N 010 275 4	hexagon-head bolt M 10 X 35		4	
		- -- E N D -- -			

Model	Year	MG	SG	Illustration	Restrictions	Update				
924	85	3	01	301-05		187	11:54	06.04.2005	PORSCHE	PET	PORSCHE

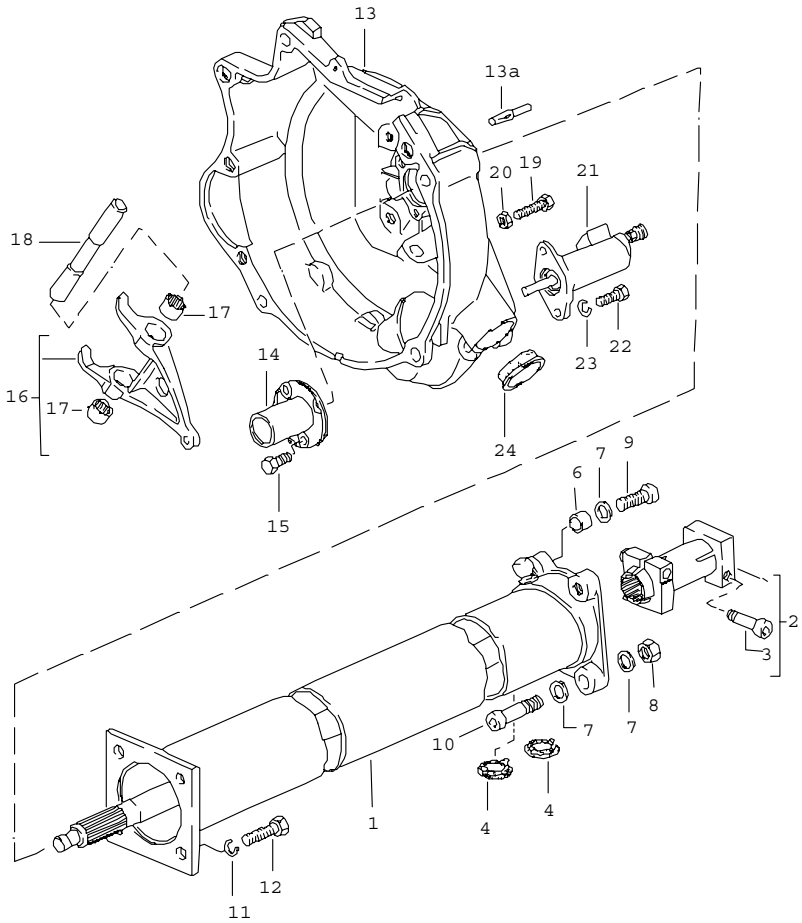

Pos		Part Number	Name	Remarks	Qty	Model
			central tube manual transmission G31.01/02/03			TURBO/GT
1	>	931 421 012 01	central tube ready for installation		1	
2		922 421 051 02	clamping sleeve		1	
3		931 421 240 00	clamping screw		2	
4		477 521 278	cap		2	
6		019 301 153	dowel sleeve		2	
7		N 011 564 2	washer 13		6	
8		N 011 020 8	hexagon nut M 12 X 1,5		2	
9	E	N 044 738 1	pan-head screw M 12 X 1,5 X 40		2	
10		N 044 757 1	pan-head screw M 12 X 1,5 X 55		2	
11		900 027 016 02	lock ring B 10		4	
12		N 010 275 4	hexagon-head bolt M 10 X 35		4	
13		931 116 043 02	clutch housing		1	
13A		N 012 690 1	grooved pin 10 X 32		3	
14		016 141 181	guide sleeve		1	
15		N 090 194 2	hexagon-head bolt M 7 X 16		3	
16		931 116 085 00	clutch release lever		1	
17		999 201 213 00	needle sleeve		2	
18		951 116 133 00	operating shaft		1	
19		N 010 221 3	hexagon-head bolt M 6 X 35		1	
20		900 076 010 02	hexagon nut M 6		1	
21		944 116 237 00	clutch operating cylinder		1	

Pos	Part Number	Name	Remarks	Qty	Model	Pos	Part Number	Name	Remarks	Qty	Model
-	* 928 116 901 00	repair kit clutch operating cylinder		1							
22	N 010 233 6	hexagon-head bolt M 8 X 28		2							
23	N 012 038 1	lock ring B 8		2							
24	931 116 177 00	cap		1							
		- -- E N D -- -									

Model	Year	MG	SG	Illustration	Restrictions	Update			
924	85	3	01	301-15		187	11:54	06.04.2005	PORSCHE PET PORSCHE

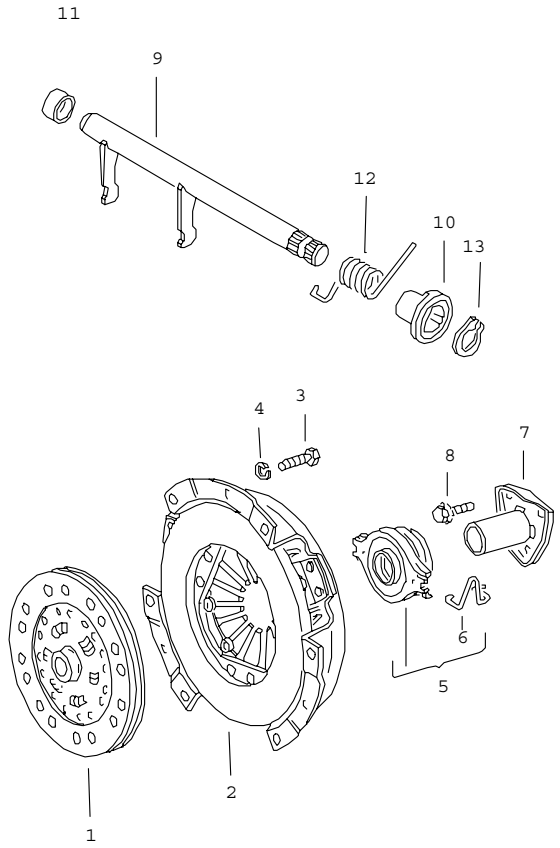

Pos	Part Number	Name	Remarks	Qty	Model
		clutch			924
1	047 141 031 C	drive plate		1	
2	> 035 141 117 E	clutch pressure plate		1	
3	N 010 240 7	hexagon-head bolt M 8 X 20		6	
4	900 027 015 02	lock ring B 8		6	
5	113 141 165 B	clutch release bearing		1	
6	113 141 177 C	spring	/L	1	
(6)	113 141 178 C	spring	/R	1	
7	016 141 181	guide sleeve		1	
8	N 090 194 2	hexagon-head bolt M 7 X 16		3	
9	E 088 141 701	operating shaft		1	
10	E 092 141 699	bush		1	
11	088 141 713 B	bush		1	
12	088 141 723	torsion spring		1	
13	N 012 640 1	circlip		1	
--	924 116 911 00	repair kit for clutch		1	
		- -- E N D -- -			

Model	Year	MG	SG	Illustration	Restrictions	Update			
924	85	3	01	301-20		187	11:54	06.04.2005	PORSCHE PET PORSCHE

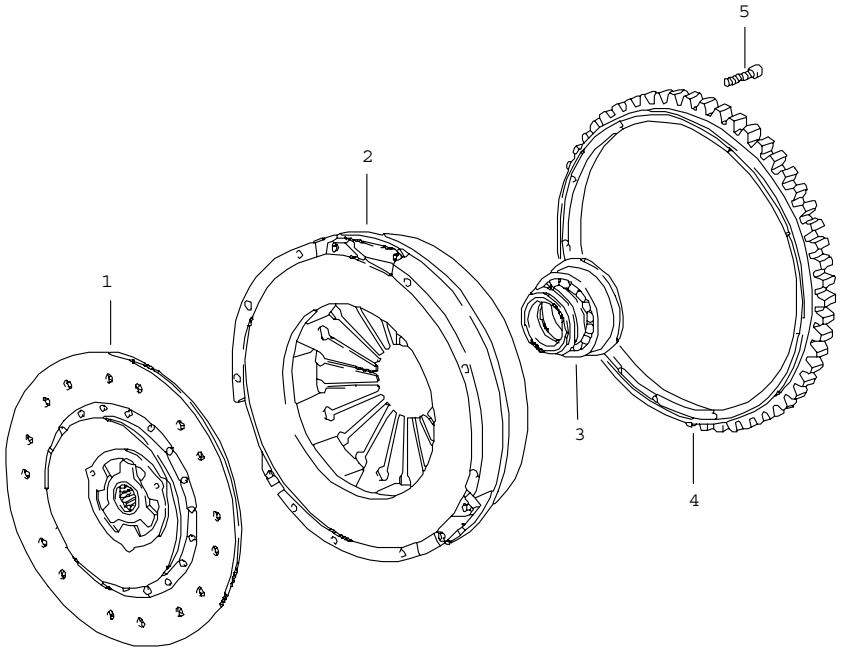

Pos	Part Number	Name	Remarks	Qty	Model
		clutch			TURBO/GT
1	> 931 116 011 04	clutch plate spring damped		1	M31.01/02 M31.03/04/50
1	944 116 012 08	clutch plate rubber damped	81-	1	M31.03
2	> 931 116 001 02	pressure plate only together with 931.116.011.04		1	M31.01/02 M31.03/04
2	> 915 116 001 27	pressure plate only together with 931.116.011.04	81	1	M31.50
2	931 116 001 03	pressure plate only together with 944.116.012.08	81-	1	M31.03
3	931 116 082 04	clutch release bearing		1	
4	944 116 239 03	starter ring		1	
5	900 067 020 02	pan-head screw M 8 X 50		9	

- -- E N D -- -

Model	Year	MG	SG	Illustration	Restrictions	Update	11:54	06.04.2005	PORSCHE PET PORSCHE
924	85	3	02	302-00		187			

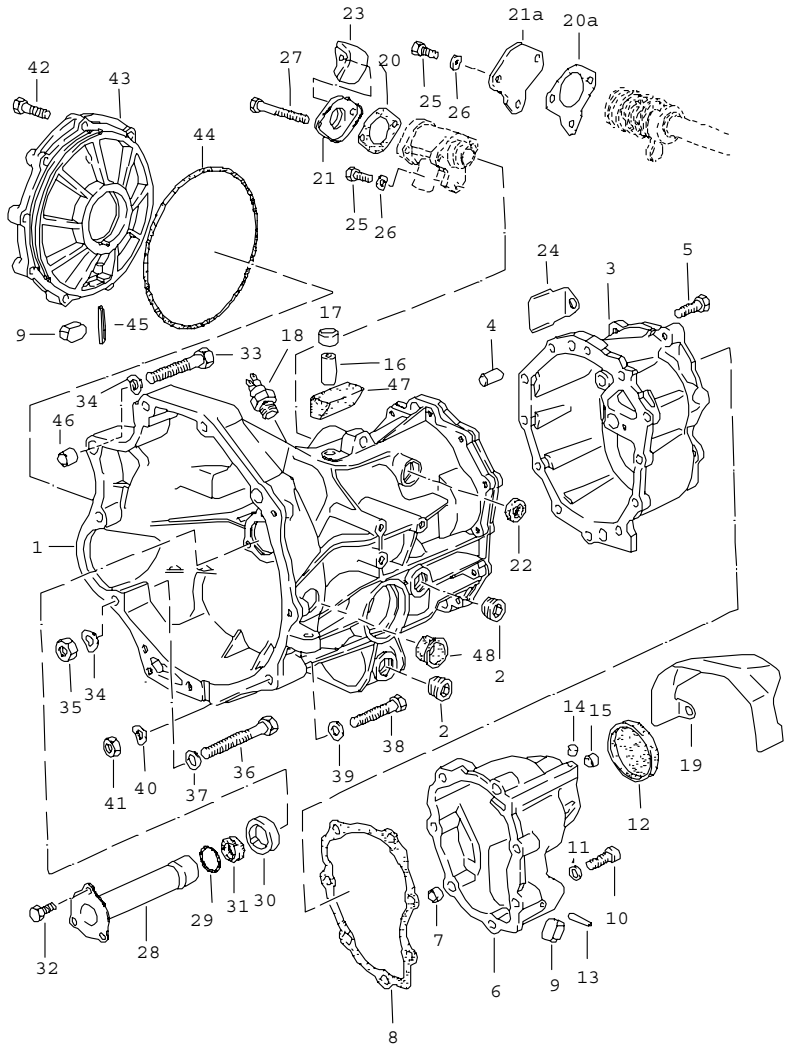

Pos	Part Number	Name	Remarks	Qty	Model
		replacement transmission transmission case manual transmission VQ VR UV MD ME MF MB MX 4Q 5Q 6Q			924
-	> 016 300 041 F	replacement transmission ready for installation	80	1	VQ
-	E 016 300 043 K	replacement transmission ready for installation	81-	1	MD
-	E 016 300 045 L	replacement transmission with limited-slip differential ready for installation	82-	1	4Q
1	016 301 103 J	transmission case	80	1	VQ VR UV
1	016 301 103 N	transmission case	81-	1	MD MF ME
2	111 301 127 E	screw plug M 24 X 1,5		2	
3	016 301 211 C	end plate use also: 014.301.115.A 019.301.115	80	1	VQ VR UV
3	016 301 211 F	end plate see tpi GR. 3/1 use also: 2X 019.301.115	81-	1	MD MF ME
4	014 301 473	guide sleeve		2	
5	N 010 332 4	hexagon-head bolt M 8 X 32		8	
5	N 010 369 2	hexagon-head bolt M 8 X 58		4	
6	E 016 301 231 B	cover	80	1	VQ VR UV
6	016 301 231 F	cover	81-	1	MD MF ME
7	016 301 299	dowel sleeve		2	
8	E 016 301 235 B	gasket	80	1	VQ VR UV
8	* 016 301 235 C	gasket	81-	1	MD ME MF
9	084 301 143 A	magnet		2	
10	N 014 715 1	pan-head screw M 8 X 45		7	

Pos	Part Number	Name	Remarks	Qty	Model
11	900 031 001 02	washer 8,4		7	
12	088 301 467 B	cover		1	
13	N 013 371 1	straight pin 6 M 6 X 24		1	
14	019 301 115	plug		1	
15	014 301 115 A	plug	80	1	VQ VR UV
15	019 301 115	plug	81-	1	MD ME MF
16	014 301 473	guide sleeve		1	
17	014 301 485	cap		1	
18	084 941 521	switch		1	
20	* 016 301 455	gasket	80	1	VQ VR UV
20A	* 016 301 455 A	gasket	81-	1	MD ME MF
21	016 301 465 A	cover	80	1	VQ VR UV
21A	016 301 453 B	cover	81-	1	MD ME MF
22	* 928 303 120 01	shaft seal		1	
25	900 075 193 08	hexagon-head bolt M 6 X 16		1	
26	N 012 226 5	spring washer B 6		1	
27	900 074 164 02	hexagon-head bolt M 6 X 70	80	2	VQ VR UV
28	088 301 687 A	protective tube		1	VQ VR UV MD ME MF
29	* 088 301 699 A	sealing ring		1	VQ VR UV MD ME MF
30	E 088 301 697 B	centring ring		1	VQ VR UV MD ME MF
31	* 999 113 275 40	shaft seal		1	VQ VR UV MD ME MF
32	N 090 194 2	hexagon-head bolt M 7 X 16		3	
33	N 010 183 1	hexagon-head bolt M 12 X 75		2	
34	900 028 014 02	spring washer B12		3	
35	N 011 020 8	hexagon nut M 12		1	
36	N 010 185 3	hexagon-head bolt M 12 X 80		1	
37	N 011 531 7	washer A 13		1	
38	N 010 460 2	hexagon-head bolt M 10 X 60		1	
39	N 011 527 2	washer A 10,5		1	
40	N 012 230 6	spring washer B 10		1	
41	N 011 010 13	hexagon nut M 10		1	
42	N 090 191 1	hexagon-head bolt M 8 X 35		7	
43	088 409 131 C	cover		1	
44	* 113 301 185 A	sealing ring		1	
45	N 013 291 1	tensioning sleeve		1	
46	019 301 153	dowel sleeve		2	
47	016 301 349	cover plate	-81	1	
(47)	016 301 349	cover plate	82-	1	
48	477 521 177	cap		1	
		- -- E N D -- -			

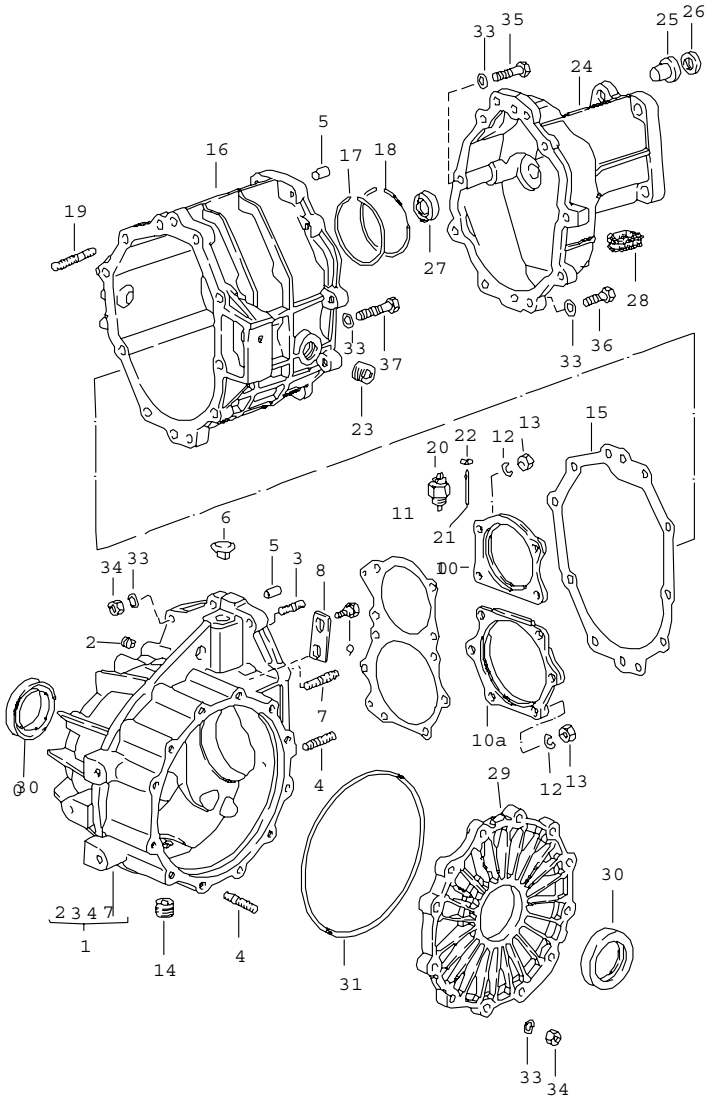

Pos	Part Number	Name	Remarks	Qty	Model
		replacement transmission transmission case manual transmission G31.01/02/03			TURBO/GT
-	> 931 300 010 00	replacement transmission ready for installation		1	G31.01
-	E 931 300 010 04	replacement transmission ready for installation	81	1	G31.03
-	E 931 300 010 02	replacement transmission with limited-slip differential ready for installation		1	G31.01
-	E 931 300 010 05	replacement transmission with limited-slip differential ready for installation	81	1	G31.03
1	931 301 901 02	rear axle housing		1	
2	999 504 047 00	threaded insert M 10 X 10		2	
3	N 014 532 4	stud BM 8 X 16		4	
4	999 062 008 02	stud BM 8 X 25		12	
5	900 012 110 00	straight pin M 6 X 14		4	
6	928 301 311 01	bleeder		1	
7	999 062 009 02	stud BM 8 X 28		2	
8	477 303 132 A	locking piece		1	
9	477 303 133 A	hexagon-head bolt		2	
10	915 302 121 03	tensioning plate		1	
10A	931 302 123 01	tensioning plate		1	
11	915 302 268 03	adjusting shim 0,10		1	
11	915 302 268 04	adjusting shim 0,15		X	
11	915 302 268 05	adjusting shim 0,20		X	

Pos	Part Number	Name	Remarks	Qty	Model
12	900 027 015 02	lock ring B 8		10	
13	900 076 025 02	hexagon nut M 8		10	
14	E 113 301 141 B	magnetic plug		1	
15	* 477 301 191 A	gasket		1	
16	931 301 902 00	gear housing		1	
17	900 111 001 00	snap ring		2	
18	999 152 031 01	snap ring		2	
19	E 999 062 098 02	stud BM 8 X 38		1	
20	084 941 521	switch		1	
21	931 303 175 00	pin		1	
22	999 041 503 01	locking ring		1	
23	111 301 127 E	screw plug M 24 X 1,5		1	
24	931 301 301 00	transmission cover		1	
25	E 001 301 209	guide bush		1	
26	* 001 301 227	radial shaft seal 15 X 24 X 7		1	
27	* 999 113 247 40	radial shaft seal		1	
28	928 301 171 00	cap		1	
29	E 915 301 311 06	transmission cover		1	
30	* 999 113 183 40	radial shaft seal 45 X 68 X 10		2	
31	* 999 701 392 40	o-ring		1	
33	N 012 241 8	spring washer B 8		X	
34	900 076 025 02	hexagon nut M 8		X	
35	900 074 134 02	hexagon-head bolt M 8 X 45		1	
36	900 075 099 02	hexagon-head bolt M 8 X 30		9	
37	900 074 139 02	hexagon-head bolt M 8 X 55		1	
		- -- E N D -- -			

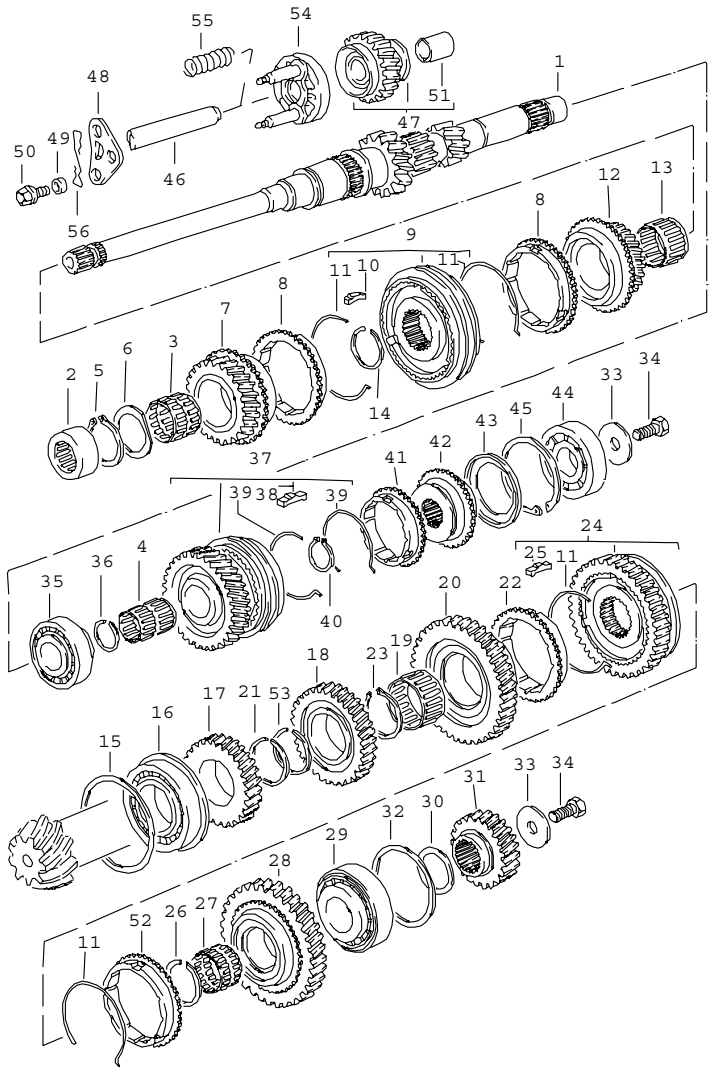

Pos	Part Number	Name	Remarks	Qty	Model
		gears and shafts manual transmission VQ VR UV MD ME MF MB MX			924
1	016 311 105 Q	drive shaft		1	VQ VR UV MD ME MF MD ME MF
2	088 311 123	needle sleeve		1	VQ VR UV MD ME MF
3	016 311 115	needle-roller bearing 4th speed		1	
4	016 311 116 A	needle-roller bearing 5th speed		1	
5	088 311 287	circlip 1,65		1	
5	088 311 287 B	circlip 1,75		X	
5	016 311 344	circlip together with shaft 016.311.105.S shaft 016.311.105.Q		X	
6	088 311 155 A	thrust washer		1	
7	016 311 351 A	shifting gear 4th speed		1	VQ MD MB MX
8	088 311 295 B	synchroniser ring 3rd, 4th speed		2	
9	088 311 301 B	synchronising hub 3rd, 4th speed		1	
10	088 311 245	detent 3rd, 4th speed		3	
11	088 311 311 D	spring		4	
12	005 311 285	shifting gear 3rd speed		1	VQ MD MB MX
13	016 311 213 H	needle-roller bearing 3rd speed		1	
14	088 311 317	circlip 1,50		1	

Pos	Part Number	Name	Remarks	Qty	Model
14	088 311 317 B	circlip 1,56		X	
14	088 311 317 C	circlip 1,62		X	
15	088 311 391	shim 0,20		1	
15	088 311 391 A	shim 0,25		X	
15	088 311 391 B	shim 0,30		X	
15	088 311 391 C	shim 0,35		X	
15	088 311 391 D	shim 0,40		X	
15	088 311 391 E	shim 0.65		X	
15	088 311 391 F	shim 0,90		X	
15	088 311 391 G	shim 1,15		X	
16	016 311 220 E	taper roller bearing		1	
17	016 311 149 C	gear wheel 4th speed G >> MD 03 08 2		1	VQ MD MB MX
17	016 311 149 G	gear wheel 4th speed G MD 04 08 2 >>		1	VQ MD MB MX
18	016 311 131 D	gear wheel 3rd speed G >> MD 03 08 2		1	VQ MD MB MX
18	016 311 131 E	gear wheel 3rd speed G MD 04 08 2 >>		1	VQ MD MB MX
19	016 311 229 A	needle-roller bearing 2nd gear		1	
20	016 311 271	shifting gear 2nd gear		1	

Pos	Part Number	Name	Remarks	Qty	Model
		circlip G >> MD 03 08 2	-82		
21	016 311 363	circlip 2,24		1	
21	016 311 363 A	circlip 2,26		X	
21	016 311 363 B	circlip 2,28		X	
21	016 311 363 C	circlip 2,30		X	
21	016 311 363 D	circlip 2,32		X	
21	016 311 363 E	circlip 2,34		X	
21	016 311 363 F	circlip 2,36		X	
21	016 311 363 G	circlip 2,38		X	
21	016 311 363 H	circlip 2,40		X	
		circlip G MD 04 08 2 >>			
21	016 311 363 AA	circlip 2,24		1	
21	016 311 363 AB	circlip 2,26		X	
21	016 311 363 AC	circlip 2,28		X	
21	016 311 363 AD	circlip 2,30		X	
21	016 311 363 AE	circlip 2,32		X	
21	016 311 363 AF	circlip 2,34		X	
21	016 311 363 AG	circlip 2,36		X	
21	016 311 363 AH	circlip 2,38		X	

Pos	Part Number	Name	Remarks	Qty	Model
21	016 311 363 AJ	circlip 2,40		X	
22	016 311 295	synchroniser ring 2nd gear		1	
23	016 311 287	circlip 1,65		1	
23	016 311 287 A	circlip 1,70		X	
23	016 311 287 B	circlip 1,75		X	
24	016 311 239 E	synchronising hub 1st/2nd gear		1	
25	088 311 313	detent 1st/2nd gear		3	
26	016 311 327	circlip 1,50		1	
26	016 311 327 A	circlip 1,55		X	
26	016 311 327 B	circlip 1,60		X	
27	016 311 207 A	needle-roller bearing		1	
28	016 311 257	shifting gear 1st gear		1	
29	E 016 311 375 B	taper roller bearing see tpi GR. 3/1		1	
30	016 311 391	adjusting shim 1,10		1	
30	016 311 391 A	adjusting shim 1,40		X	
30	016 311 391 B	adjusting shim 1,70		X	
30	016 311 391 C	adjusting shim 2,00		X	
30	016 311 391 D	adjusting shim 2,30		X	
31	016 311 159 E	gear wheel 5th speed		1	VQ MD
32	016 311 393	shim 0,24		1	
(32)	016 311 393 A	shim 0,27		X	
(32)	016 311 393 B	shim 0,30		X	
(32)	016 311 393 C	shim 0,33		X	
(32)	016 311 393 D	shim 0,36		X	
(32)	016 311 393 E	shim 0,39		X	
(32)	016 311 393 F	shim 0,42		X	
(32)	016 311 393 G	shim 0,45		X	
(32)	016 311 393 H	shim 0,69		X	
(32)	016 311 393 J	shim 0,93		X	
(32)	016 311 393 K	shim 1,17		X	
(32)	016 311 393 L	shim 1,41		X	
33	N 902 582 01	clamping screw		2	
34	N 902 582 01	clamping screw M 10 X 22		2	
35	016 311 427	cylindrical-roller bearing		1	
36	N 900 606 01	circlip A 27 X 1,35		1	
(36)	N 900 606 02	circlip A 27 X 1,40		X	
(36)	N 900 606 03	circlip A 27 X 1,45		X	
37	016 311 353 D	shifting gear 5th speed		1	VQ MD
38	016 311 246	detent 5th speed		3	

Pos	Part Number	Name	Remarks	Qty	Model
39	014 311 311 C	spring 5th speed		2	
40	N 900 607 01	circlip A 27 X 1,9		1	
41	014 311 295 E	synchroniser ring 5th speed		1	
42	016 311 192 A	clutch hub 5th speed		1	
43	016 311 449	dust plate		1	
44	016 311 445	four-point bearing		1	
45	N 900 608 01	circlip A 68 X 2,83		1	
(45)	N 900 608 02	circlip A 68 X 2,90		X	
46	E 016 311 519 A	axle	80	1	VQ VR UV
(46)	016 311 519 B	reverse idler gear shaft	81-	1	MD ME MF
47	016 311 529 D	reverse idler gear		1	
48	016 311 853 B	retainer plate		1	
49	088 301 291 A	shouldered bolt		1	
50	088 301 291 A	shouldered bolt M 8 X 16		1	
51	088 311 533	bush		1	
52	016 311 247	synchroniser ring 1st gear		1	
53	016 311 363 H	circlip 2,40 G >> MD 03 08 2		1	
53	016 311 363 AJ	circlip 2,40 G MD 04 08 2 >>		1	MD
54	016 311 839 C	synchroniser ring		1	MD
55	016 311 859 C	compression spring		1	MD
56	016 311 861 C	spring		1	MD
		- -- E N D -- -			

Model	Year	MG	SG	Illustration	Restrictions	Update				
924	85	3	03	303-05		187	11:55	06.04.2005	PORSCHE	PET	PORSCHE

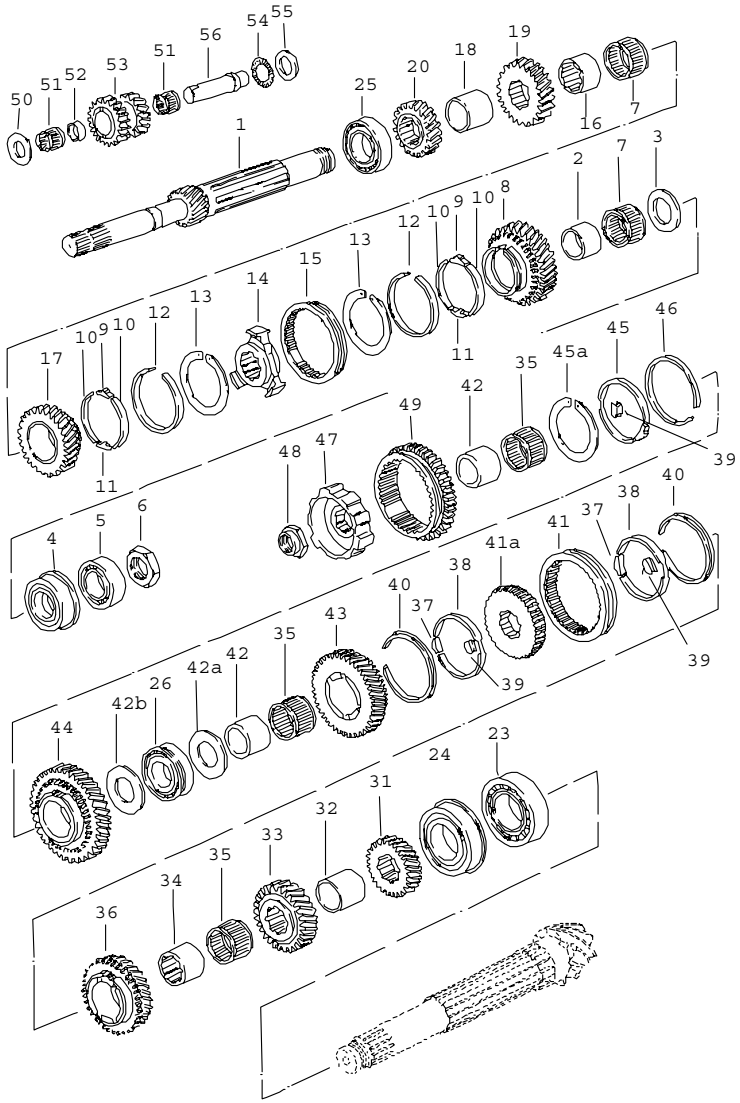

Pos	Part Number	Name	Remarks	Qty	Model
		gears and shafts manual transmission G31.01/02/03			TURBO/GT
1	-	drive shaft see group 3/03/10		1	
2	915 302 261 00	bush 5th speed		1	
3	930 302 291 00	thrust washer		1	
4	999 052 030 00	four-point bearing		1	
5	930 302 391 00	cylindrical-roller bearing		1	
6	930 302 281 00	collar nut M 30 X 1,5		1	
7	999 201 470 00	needle cage		2	
8	-	loose gear wheel 5th speed see group 3/03/10		1	
9	911 302 315 00	stone		2	
10	911 302 316 00	brake band		4	
11	911 302 317 12	stop		2	
12	911 302 301 08	synchroniser ring		2	
13	911 302 311 01	circlip		2	
14	911 302 402 20	guide sleeve		1	
15	911 302 411 20	shift sleeve		1	
16	E 915 302 262 00	bush		1	
17	-	loose gear wheel 4th speed see group 3/03/10		1	
18	477 302 266	spacer sleeve		1	
19	-	fixed gear wheel 3rd speed see group 3/03/10		1	

Pos	Part Number	Name	Remarks	Qty	Model
20	-	fixed gear wheel 2nd gear see group 3/03/10		1	
23	999 110 146 00	cylindrical-roller bearing		1	
24	999 052 053 00	four-point bearing		1	
25	999 110 091 00	cylindrical-roller bearing		1	
26	999 110 076 00	cylindrical-roller bearing		1	
31	-	fixed gear wheel 5th speed see group 3/03/10		1	
32	477 302 266	spacer sleeve		1	
33	-	fixed gear wheel 4th speed see group 3/03/10		1	
34	477 302 263	bush 3rd speed		1	
35	E 477 302 298	needle cage		3	
36	-	loose gear wheel 3rd speed see group 3/03/10		1	
37	915 302 315 01	stone		3	
38	928 302 318 01	double barricade tape		2	
39	928 302 321 00	stop		3	
40	931 302 301 01	synchroniser ring		2	
41	928 302 413 08	shift sleeve		1	
41A	477 302 402	guide sleeve 2nd/3rd gear		1	
42	477 302 261	bush 1st/2nd gear		2	
42A	477 302 291	thrust washer		1	
42B	931 302 291 00	thrust washer		1	
43	-	loose gear wheel 2nd gear see group 3/03/10		1	
44	-	loose gear wheel 1st gear see group 3/03/10		1	
45	928 302 319 05	double barricade tape		1	
45A	915 302 311 01	circlip		1	
46	931 302 301 02	synchroniser ring		1	G31.01/02
46	915 302 301 06	synchroniser ring		1	G31.03
47	931 302 401 00	guide sleeve 1st gear reverse gear		1	
48	915 302 282 00	collar nut M 24 X 1,5		1	
49	931 302 227 00	shifting gear 1st gear reverse gear		1	
50	915 302 229 01	thrust washer		1	
51	999 201 141 00	needle cage		2	
52	931 302 231 00	intermediate ring		1	
53	-	reverse idler gear see group 3/03/10		1	
54	999 202 001 00	axial needle bearing cage		1	
55	999 201 707 01	washer		1	
56	931 302 233 00	bolt		1	
		- -- E N D -- -			

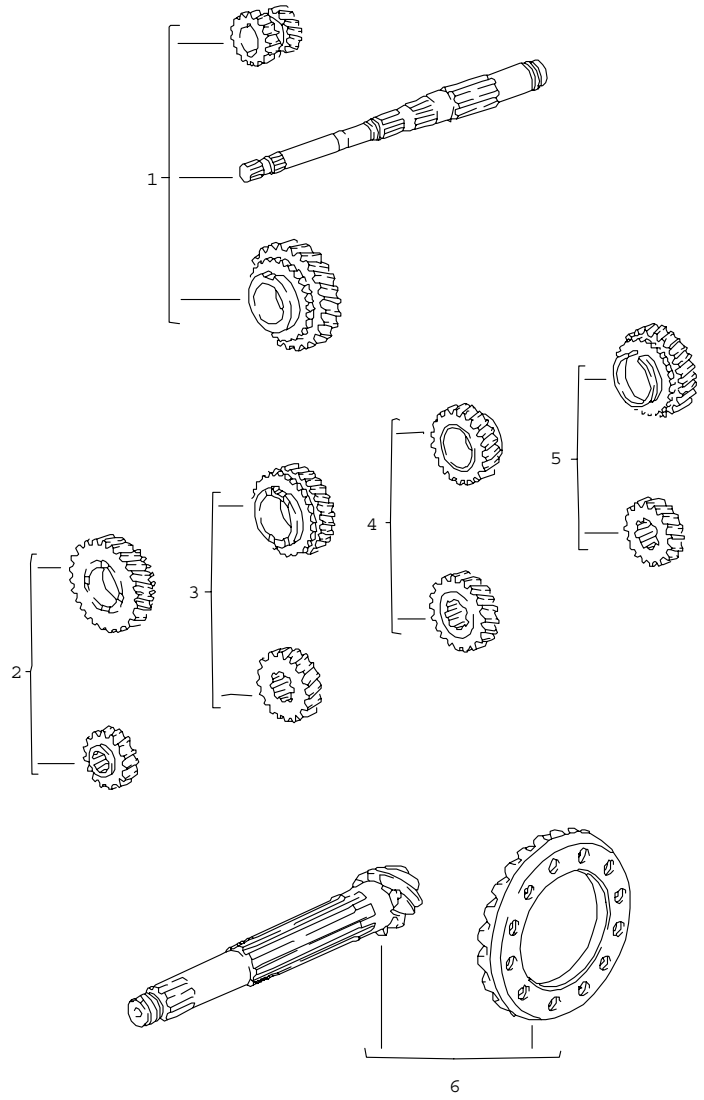

Pos	Part Number	Name	Remarks	Qty	Model
		gear sets manual transmission G31.01/02/03			TURBO/GT
		transmission TYP G 31.01			TURBO
1	931 302 901 02	gear set 1st gear reverse gear Z = 12 : 38 comprising: drive shaft loose gear wheel reverse idler gear		1	
2	931 302 902 02	gear set 2nd gear Z= 18 : 32 comprising: loose gear wheel fixed gear wheel		1	
3	477 302 903	gear set 3rd speed Z= 23 : 28 comprising: loose gear wheel fixed gear wheel		1	
4	477 302 904	gear set 4th speed Z= 29 : 27 comprising: loose gear wheel fixed gear wheel		1	
5	477 302 905 A	gear set 5th speed Z= 34 : 24 comprising: loose gear wheel fixed gear wheel		1	
6	931 302 911 01	ring gear and pinion shaft 8:33 comprising: drive shaft crown wheel		1	
		transmission TYP G 31.03	81		GT

Pos	Part Number	Name	Remarks	Qty	Model	Pos	Part Number	Name	Remarks	Qty	Model
1	931 302 901 02	gear set 1st gear reverse gear Z= 12 : 38 comprising: drive shaft loose gear wheel reverse idler gear		1							
2	931 302 902 02	gear set 2nd gear Z= 18 : 32 comprising: loose gear wheel fixed gear wheel		1							
3	E 477 302 903 A	gear set 3rd speed Z= 23 : 28 comprising: loose gear wheel fixed gear wheel		1							
4	477 302 904 A	gear set 4th speed Z= 29 : 27 comprising: loose gear wheel fixed gear wheel		1							
5	477 302 905 B	gear set 5th speed Z= 34 : 24 comprising: loose gear wheel fixed gear wheel		1							
6	931 302 911 33	ring gear and pinion shaft 8:33 comprising: drive shaft crown wheel		1							
		- -- E N D -- -									

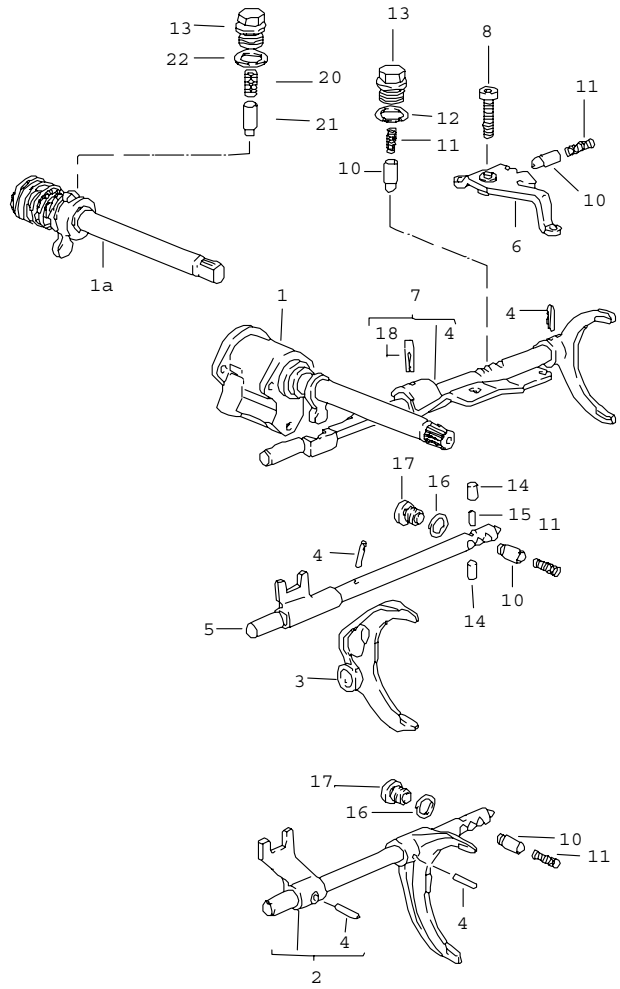

Pos	Part Number	Name	Remarks	Qty	Model
		shift rods forks manual transmission VQ VR UV MD ME MF MB MX			924
1	016 311 475 A	shift rod ready for installation	80	1	VQ VR UV
1A	016 311 475 G	shift rod ready for installation	81-	1	MD ME MF MB MX
2	016 311 549 A	shift fork 1st/2nd gear		1	
3	016 311 561 A	shift fork 3rd, 4th speed		1	
4	N 900 073 01	tensioning sleeve 6 X 22		4	
5	016 311 567	gear shift rod 3rd, 4th speed		1	
6	016 311 573 B	reverse lever		1	
7	E 016 311 575 B	gear shift rod 5th speed reverse gear	80	1	VQ VR UV
(7)	016 311 575 C	gear shift rod	81-	1	MD ME MF
8	084 311 589 B	pan-head screw M 10 X 32		1	
10	084 311 621 D	bush		4	
11	014 311 641 A	compression spring		4	
12	900 123 140 30	sealing ring A 18 X 22		1	
13	005 311 689	screw plug		1	
14	014 311 629	detent		2	
15	014 311 635	intermediate piece		1	
16	* 088 311 599	sealing ring		2	
17	088 311 721	stop screw		2	
18	N 013 336 1	tensioning sleeve 6 X 26		1	
-	E N 013 363 1	straight pin 5 M 6 X 24	80	1	VQ VR UV

Model	Year	MG	SG	Illustration	Restrictions	Update			
924	85	3	04	304-00		187	11:56	06.04.2005	PORSCHE PET PORSCHE

Pos	Part Number	Name	Remarks	Qty	Model	Pos	Part Number	Name	Remarks	Qty	Model
20	016 311 735 A	compression spring	81-	1	MD ME MF						
21	016 311 717 C	bush	81-	1	MD ME MF						
22	* 005 311 599	sealing washer	81-	1	MD ME MF						
		- -- E N D -- -									

Model	Year	MG	SG	Illustration	Restrictions	Update				
924	85	3	04	304-05		187	11:56	06.04.2005	PORSCHE	PET	PORSCHE

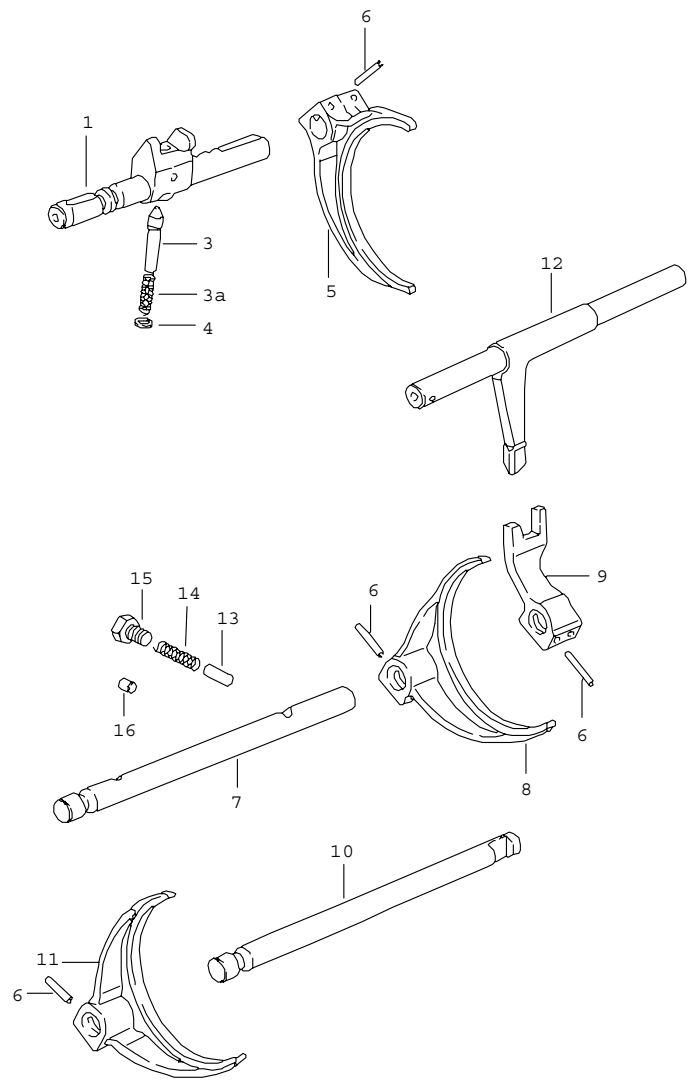

Pos	Part Number	Name	Remarks	Qty	Model
		shift rods forks manual transmission G31.01/02/03			TURBO/GT
1	931 303 102 01	gear shift rod 1st gear reverse gear		1	
3	477 303 230 C	locking bolt		1	
3A	477 303 234 C	spring		1	G31.01/02
3A E	931 303 234 00	spring		1	G31.03
4	477 303 235	washer		1	
5	931 303 111 00	shift fork 1st gear reverse gear		1	
6	N 013 317 1	roll pin 5 X 28		6	
7	477 303 103 A	gear shift rod 2nd/3rd gear		1	
8 E	477 303 112	shift fork 2nd/3rd gear		1	
9	477 303 115	contact 2nd/3rd gear		1	
10	477 303 104 A	gear shift rod 4th/5th gear		1	
11	477 303 114	shift fork 4th/5th gear		1	
12 E	477 303 101	inner shift rod		1	
13	931 303 131 00	detent		4	
14	477 303 236	spring		3	
15	900 075 352 02	hexagon-head bolt M 10 X 8		3	
16	901 105 379 00	plug		1	
		- -- E N D -- -			

Model	Year	MG	SG	Illustration	Restrictions	Update	11:56	06.04.2005	PORSCHE	PET	PORSCHE
924	85	3	05	305-00		187					

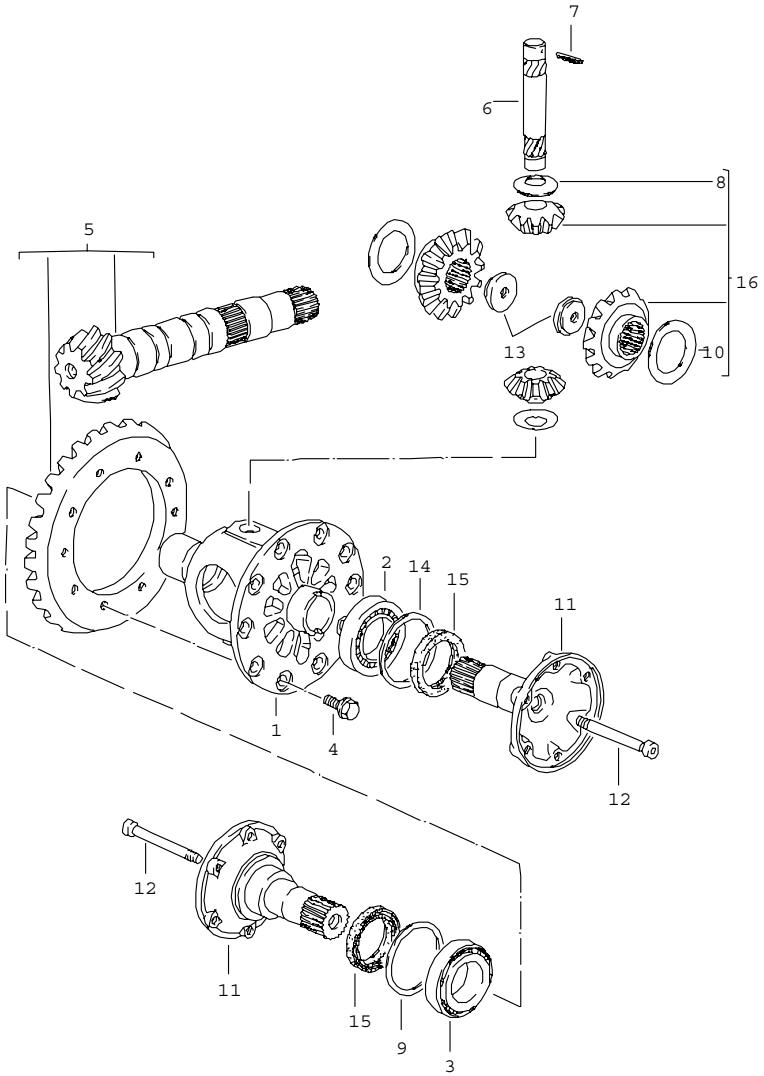

Pos	Part Number	Name	Remarks	Qty	Model
		differential manual transmission VQ VR UV MD ME MF MB MX			924
1	088 409 121 B	differential housing		1	
2	016 409 123	taper roller bearing	/L	1	
3	113 517 185 C	taper roller bearing	/R	1	
4	088 409 135 A	hexagon-head bolt M 10 X 18		10	
5	016 409 143 AJ	ring gear and pinion shaft 9 : 35 G >> MD 03 08 2		1	VQ MD MB MX
(5)	016 409 143 BF	ring gear and pinion shaft 9 : 35 G MD 04 08 2 >>		1	MD VQ MB MX
6	005 409 177	bolt		1	
7	N 013 319 1	tensioning sleeve 5 X 36		1	
8	* 016 409 170	thrust washer		2	
9	113 517 201 A	shim 0,15	/R	1	
(9)	113 517 202 A	shim 0,20	/R	X	
(9)	113 517 203 A	shim 0,30	/R	X	
(9)	113 517 204 A	shim 0,40	/R	X	
(9)	113 517 205 A	shim 0,50	/R	X	
(9)	113 517 206 A	shim 0,60	/R	X	
(9)	02A 409 210 A	shim 0,70	/R	X	
(9)	02A 409 210 C	shim 0,80	/R	X	
(9)	02A 409 210 E	shim 0,90	/R	X	
(9)	02A 409 210 G	shim 1,00	/R	X	

Pos	Part Number	Name	Remarks	Qty	Model
(9)	113 517 211 A	shim 1,20	/R	X	
10	* 011 519 215	thrust washer 0,50		2	
(10)	088 409 249	thrust washer 0,60		X	
(10)	088 409 249 A	thrust washer 0,70		X	
(10)	088 409 249 B	thrust washer 0,80		X	
11	088 409 355 C	flanged shaft		2	
12	088 409 359	screw		2	
13	016 409 161	nut		2	
14	018 409 381	shim 0,15	/L	1	
(14)	018 409 383	shim 0,20	/L	X	
(14)	018 409 385	shim 0,25	/L	X	
(14)	018 409 387	shim 0,50	/L	X	
(14)	018 409 389	shim 0,80	/L	X	
(14)	018 409 391	shim 1,00	/L	X	
(14)	018 409 393	shim 1,50	/L	X	
15	* 016 409 399 B	radial shaft seal		2	
16	* 090 598 081	repair kit for differential		1	
		- -- E N D -- -			

Pos	Part Number	Name	Remarks	Qty	Model

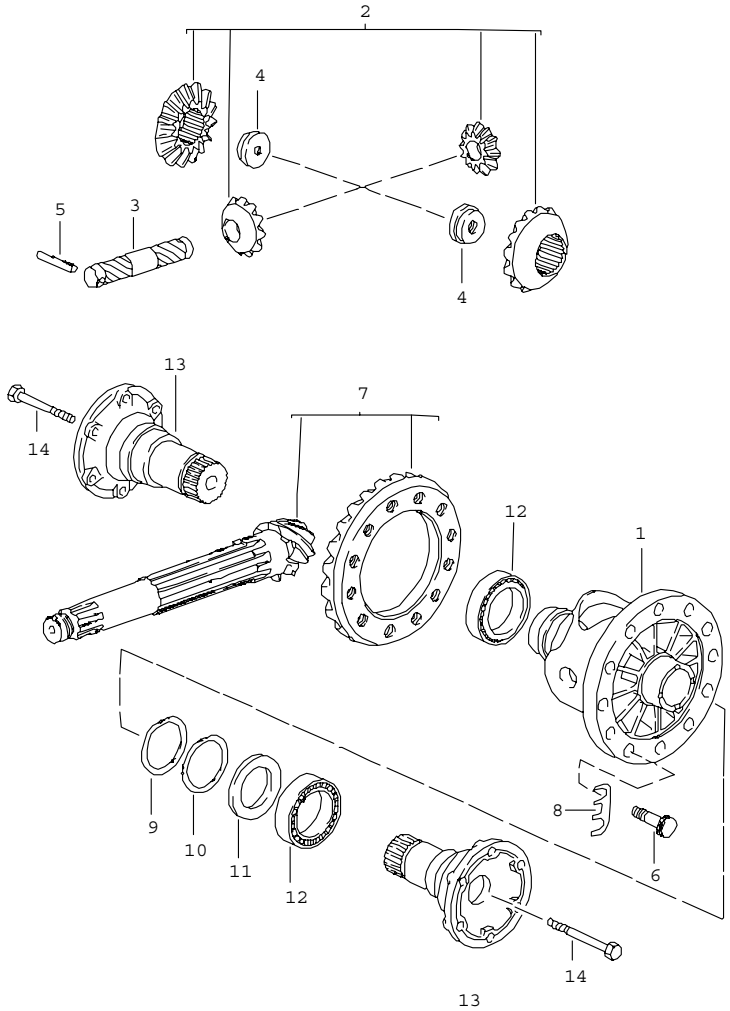

Pos	Part Number	Name	Remarks	Qty	Model
		differential manual transmission G31.01/02/03			TURBO/GT
1	930 332 212 01	differential housing bolt $ 21 MM		1	
2	* 928 332 902 00	differential pinions 1 set bolt $ 18 MM		1	
2	* 928 332 902 01	differential pinions set bolt $ 21 MM G 3101 05314 >>		1	
3	005 409 177 00	differential bolt $ 18 MM		1	
3	928 332 207 05	differential bolt $ 21 MM G 3101 05314 >>		1	
4	928 332 279 02	nut bolt $ 21 MM		2	
5	900 309 035 00	roll pin 5 X 40		1	
6	928 332 276 03	hexagon-head bolt		12	
7	* 931 302 911 01	ring gear and pinion shaft 8:33		1	G31.01
(7)	* 931 302 911 33	ring gear and pinion shaft 8:33		1	G31.03
8	901 332 285 01	tab washer		6	
9	915 332 265 00	adjusting ring 2,40		2	
(9)	915 332 265 01	adjusting ring 2,50		X	
(9)	915 332 265 02	adjusting ring 2,60		X	
(9)	915 332 265 03	adjusting ring 2,70		X	
(9)	915 332 265 04	adjusting ring 2,80		X	

Pos	Part Number	Name	Remarks	Qty	Model	Pos	Part Number	Name	Remarks	Qty	Model
(9)	915 332 265 05	adjusting ring 2,90		X							
(9)	915 332 265 06	adjusting ring 3,00		X							
(9)	915 332 265 07	adjusting ring 3,10		X							
(9)	915 332 265 08	adjusting ring 3,20		X							
(9)	915 332 265 09	adjusting ring 3,30		X							
(9)	915 332 265 10	adjusting ring 3,40		X							
(9)	915 332 265 11	adjusting ring 3,50		X							
(9)	915 332 265 12	adjusting ring 3,60		X							
(9)	915 332 265 13	adjusting ring 3,70		X							
10	915 332 263 00	washer		2							
11	477 332 344	intermediate ring		1							
12	999 059 027 00	taper roller bearing		2							
13	477 332 209 A	joint flange		2							
14	900 074 291 02	hexagon-head bolt M 10 X 80 bolt $ 18 MM		2							
14	900 074 291 02	hexagon-head bolt M 10 X 78 bolt $ 21 MM G 3101 05314 >>		2							
		- -- E N D -- -									

Model	Year	MG	SG	Illustration	Restrictions	Update				
924	85	3	05	305-06		187	11:57	06.04.2005	PORSCHE	PET	PORSCHE

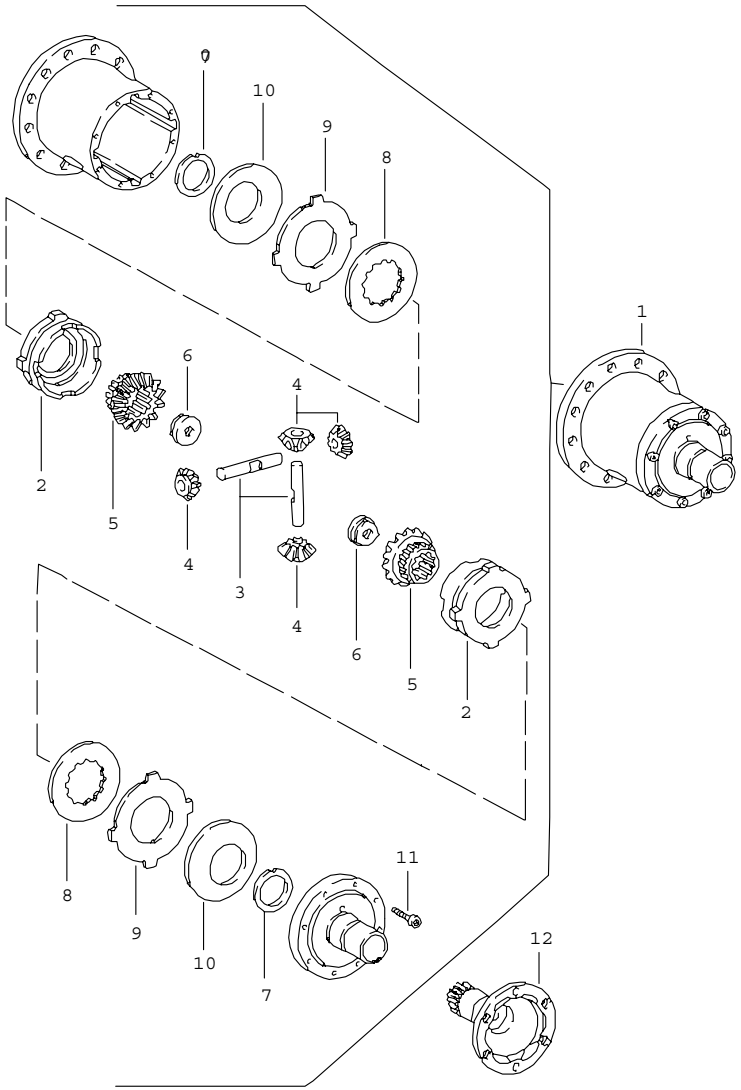

Pos	Part Number	Name	Remarks	Qty	Model
		limited-slip differential manual transmission VQ VR UV MD ME MF MB MX 4Q 5Q 6Q			924 M 220
1	944 332 053 00	limit.-slip different. 40%		1	
2	951 332 511 00	thrust ring		2	
3	928 332 541 00	differential shaft		2	
4	944 332 531 00	bevel pinion		4	
5	944 332 535 00	shaft bevel gear		2	
6	016 409 161	nut		2	
7	944 332 561 00	thrust washer		2	
8	917 332 551 10	inner disc 2,00		2	
9	917 332 552 10	disc with external splines 1,90		2	
9	917 332 552 11	disc with external splines 2,00		X	
9	917 332 552 12	disc with external splines 2,10		X	
10	928 332 555 00	cup spring 2,00		2	
11	999 119 011 00	pan-head screw M 8 X 1 X 25		2	
12	088 409 355 C	flanged shaft		2	
		- -- E N D -- -			

Model	Year	MG	SG	Illustration	Restrictions	Update	11:57	06.04.2005	PORSCHE	PET	PORSCHE
924	85	3	05	305-10		187					

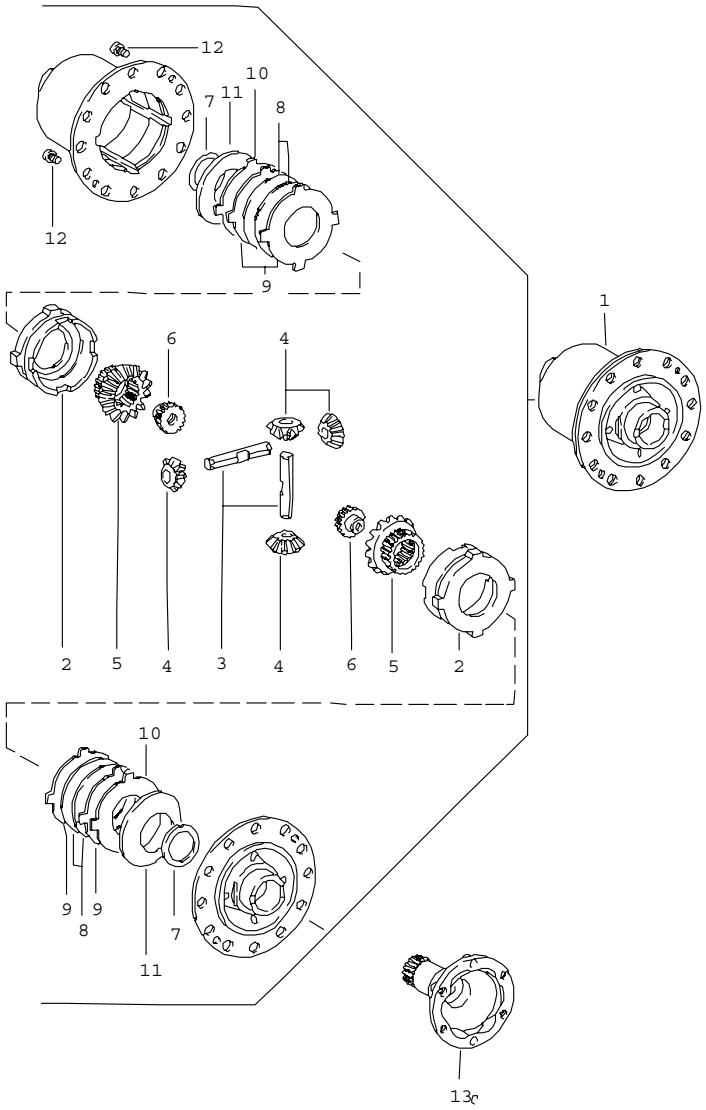

Pos	Part Number	Name	Remarks	Qty	Model
		limited-slip differential manual transmission G31.01/02/03			TURBO/GT
1	930 332 053 03	limited-slip differential		1	
2	901 332 511 11	thrust ring		2	
3	915 332 541 02	differential shaft		2	
4	915 332 531 02	bevel pinion		4	
5	930 332 535 01	shaft bevel gear		2	
6	928 332 279 01	threaded disc		2	
7	901 332 561 11	thrust washer		2	
8	917 332 551 10	inner disc 2,00		4	
9	917 332 552 10	disc with external splines 1,90		4	
9	917 332 552 11	disc with external splines 2,00		X	
9	917 332 552 12	disc with external splines 2,10		X	
10	930 332 553 00	lamina 1,40		2	
11	928 332 555 00	cup spring 2,50		2	
12	900 119 002 00	pan-head screw M 6 X 10		2	
13	477 332 209 A	joint flange		2	
		- -- E N D -- -			

Model	Year	MG	SG	Illustration	Restrictions	Update			
924	85	3	06	306-00		187	11:57	06.04.2005	PORSCHE PET PORSCHE

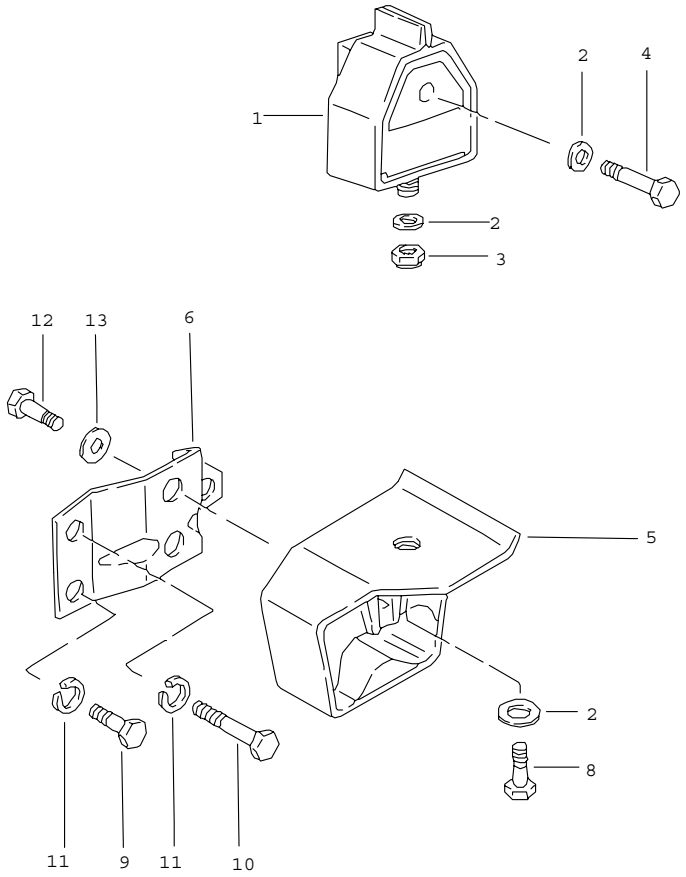

Pos	Part Number	Name	Remarks	Qty	Model
		transmission suspension manual transmission			
		POS.1 - 4 for G31.01/02/03			
1	477 399 153 H	transmission mounting		2	
2	900 025 008 09	washer A 10,5		4	
3	N 022 149 2	lock nut VM 10		2	
4	N 010 473 6	hexagon-head bolt M 10 X 75		2	
		POS.5 - 13 for VQ VR UV MD			
5	477 399 153 J	transmission mounting		2	
6	477 399 167 E	bracket	/L	1	
(6)	477 399 168 E	bracket	/R	1	
8	900 075 111 08	hexagon-head bolt M 10 X 30		2	
9	N 010 240 7	hexagon-head bolt M 8 X 20		2	
10	N 010 340 4	hexagon-head bolt M 8 X 40		2	
11	N 012 009 3	lock ring A 8		4	
12	900 075 029 09	hexagon-head bolt M 8 X 25		4	
13	N 011 525 13	washer A 8,4		4	
		- -- E N D -- -			

Model	Year	MG	SG	Illustration	Restrictions	Update				
924	85	3	07	307-00		187	11:58	06.04.2005	PORSCHE	PET	PORSCHE

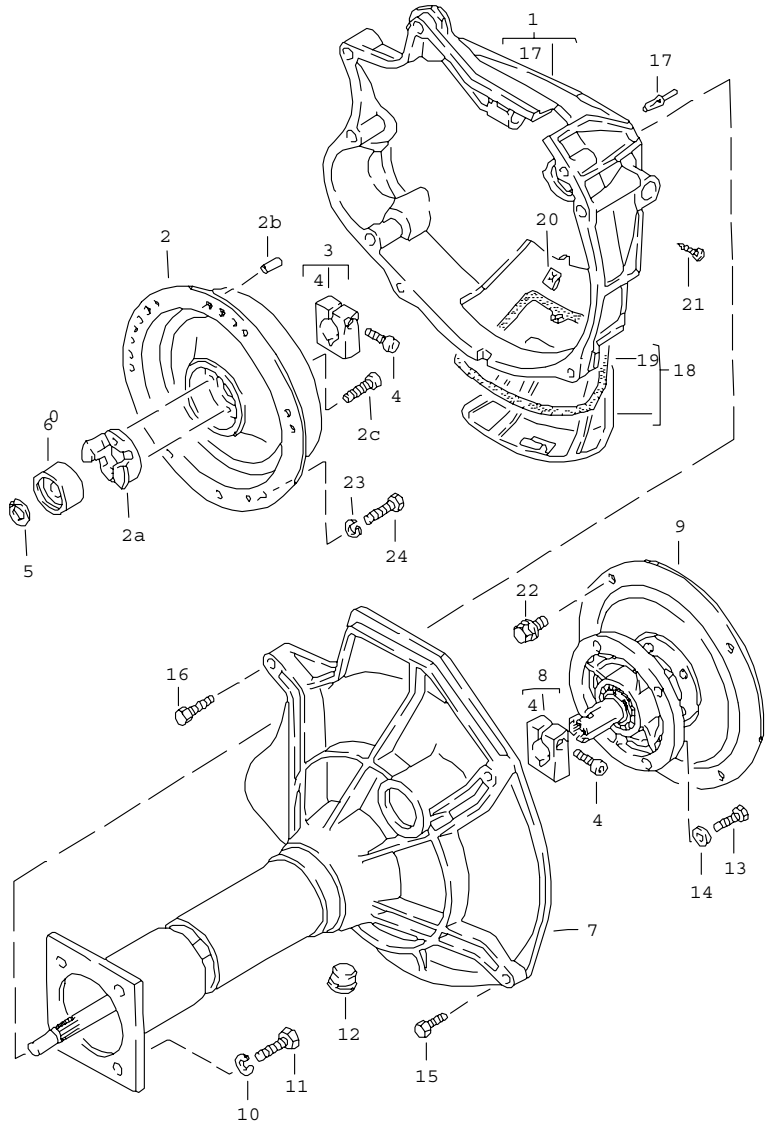

Pos	Part Number	Name	Remarks	Qty	Model
		central tube automatic transmission			924
1	477 521 109	clutch housing		1	
2	477 521 603	damper		1	
2A	477 521 617	stop plate		1	
2B	999 095 019 00	clamping pin S 10 X 20		2	
2C	N 014 725 2	pan-head screw M 8 X 25		2	
3	477 521 247 E	terminal		1	
4	477 521 501 A	pan-head screw		2	
5	900 273 002 01	circlip 17 X 1		1	
6	477 521 181 A	spacer sleeve 1,00		1	
(6)	477 521 182 A	spacer sleeve 2,00		X	
(6)	477 521 183 A	spacer sleeve 3,00		X	
(6)	477 521 184 A	spacer sleeve 4,00		X	
(6)	477 521 185 A	spacer sleeve 5,00		X	
(6)	477 521 186 A	spacer sleeve 6,00		X	
(6)	477 521 187 A	spacer sleeve 7,00		X	
(6)	477 521 188 A	spacer sleeve 8,00		X	
(6)	477 521 189 A	spacer sleeve 9,00		X	
7	E 477 521 130 C	central tube ready for installation		1	
8	477 521 247 D	terminal		1	
9	477 521 110 C	converter mounting		1	
10	900 027 016 02	lock ring B 10		4	

Pos	Part Number	Name	Remarks	Qty	Model	Pos	Part Number	Name	Remarks	Qty	Model
11	N 010 275 4	hexagon-head bolt M 10 X 35		4							
12	477 521 277 C	cap		1							
13	900 075 029 09	hexagon-head bolt M 8 X 25		4							
14	N 012 241 11	spring washer B 8 X 15		4							
15	N 010 185 3	hexagon-head bolt M 12 X 80		2							
16	N 040 240 2	hexagon-head bolt M 10 X 50		1							
17	N 012 690 1	grooved pin 10 X 32		3							
18	477 521 213	cover		1							
19	477 521 214	gasket		1							
20	999 591 327 02	speed nut B 6,3 X 23		1							
21	N 013 947 3	oval-head screw 6,3 X 19		1							
22	003 323 699 A	hexagon-head bolt		3							
23	N 012 038 1	lock ring A 8		6							
24	N 010 239 11	hexagon-head bolt M 8 X 18		6							
		- -- E N D -- -									

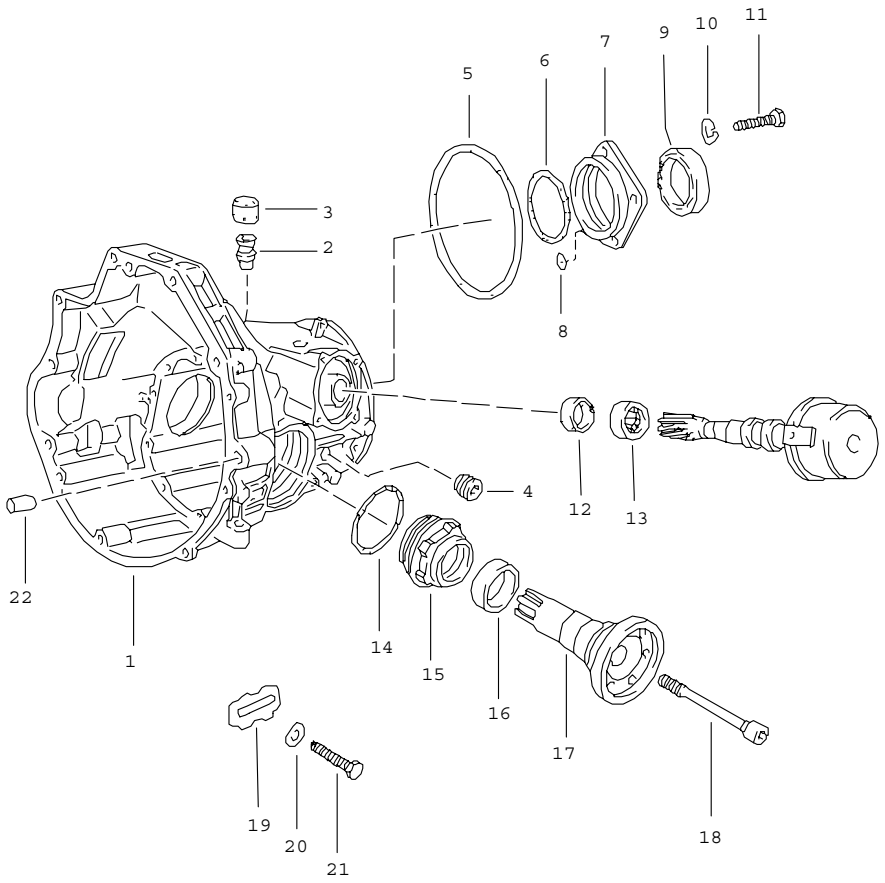

Pos	Part Number	Name	Remarks	Qty	Model
		replacement transmission final-drive housing automatic transmission			924
-	> 087 300 035 M	replacement transmission ready for installation		1	RK
-	> 087 300 038 B	replacement transmission right-hand drive ready for installation	10/82-	1	RCC
1	087 409 051 H	final-drive housing		1	
2	010 409 847	breather pipe		2	
3	087 409 841	cap		2	
4	111 301 127 E	screw plug M 24 X 1,5		1	
5	* 010 409 549 B	round seal		1	
6	* 087 409 549	round seal		1	
7	087 409 623 A	cover		1	
8	* 089 409 637 A	sealing ring		1	
9	* 087 409 529 B	radial shaft seal		2	
10	N 012 028 1	lock ring		5	
11	900 075 111 08	hexagon-head bolt M 10 X 30		5	
12	* 087 409 133	radial shaft seal		1	
13	082 409 139	needle-roller bearing		1	
14	* 011 519 345	round seal		2	
15	087 409 173	adjusting ring		2	
16	* 016 409 399 B	radial shaft seal		1	
17	087 409 355	flanged shaft	/L	1	
(17)	087 409 356	flanged shaft	/R	1	
18	087 409 359	screw	/L	1	
(18)	087 409 360	screw	/R	1	
19	010 409 257	tab washer		2	
20	N 012 226 5	spring washer B 6		2	

Pos	Part Number	Name	Remarks	Qty	Model	Pos	Part Number	Name	Remarks	Qty	Model
21	N 010 215 13	hexagon-head bolt M 6 X 15		2							
22	019 301 153	dowel sleeve		2							
		- -- E N D -- -									

Model	Year	MG	SG	Illustration	Restrictions	Update	11:58	06.04.2005	PORSCHE	PET	PORSCHE
924	85	3	09	309-00		187					

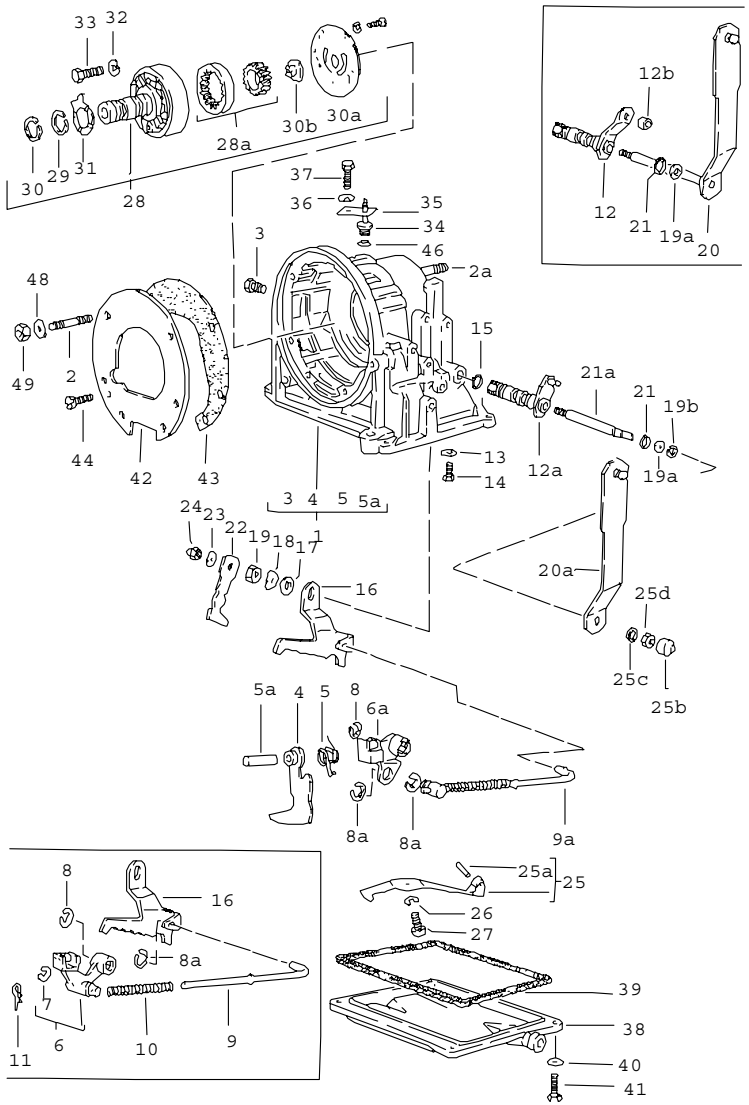

Pos	Part Number	Name	Remarks	Qty	Model
		transmission case automatic transmission			924
1	010 321 101 G	transmission case		1	
2	N 900 044 02	stud AM 8A X 56		4	
2A	E N 014 523 2	stud AM 10A X 38		2	
3	003 507 133 A	screw plug M 10 X 1		3	
4	010 321 117 B	lever parking lock		1	
5	010 321 121 A	torsion spring		1	
5A	010 321 123	bolt		1	
6	E 010 321 135 A	engaging lever parking lock G >> RK 21 05 0		1	
6A	010 321 135	engaging lever parking lock G RK 22 05 0 >> G RCC --	 -82 83	1	 (GB)
7	900 116 003 02	circlip 4		1	
8	E N 012 438 1	lock washer 9		1	
8A	N 012 436 2	lock washer 6		2	
9	010 321 155	operating rod G >> RK 21 05 0		1	
9A	010 321 153	operating rod G RK 22 05 0 >> RK 18 08 1		1	
(9A)	010 321 153 A	operating rod G RK 19 08 1 >> G RCC --	 -82 83-	1	 (GB)
10	E 010 321 159	compression spring G >> RK 21 05 0		1	
11	E 010 321 161	securing clip G >> RK 21 05 0		1	
12	087 321 173 A	lever for cable control G >> RK 03 10 0		1	

Pos	Part Number	Name	Remarks	Qty	Model
12A	087 321 171 C	lever for cable control G RK 06 10 0 >> G RCC --	 -82 83-	1	 (GB)
12B	003 321 177	bush G >> RK 03 10 0		1	
13	N 012 226 5	spring washer B 6		1	
14	N 010 224 1	hexagon-head bolt M 6 X 3,5		1	
15	* N 028 201 2	round seal		X	
16	010 321 191 A	locking segment G >> RK 18 08 1		1	
(16)	010 321 193 B	locking segment G RK 19 08 1 >> G RCC --	 -82 83-	1	 (GB)
17	211 611 179	washer A 16		1	
18	N 012 238 5	spring washer B 16		1	
19	N 011 164 2	hexagon nut M 16 X 1,5		1	
19A	010 321 180	support ring G >> RK 10 10 9		1	
19A	010 321 180 B	support washer G RK 11 10 9 >> G RCC --	 -82 83-	1	 (GB)
19B	N 023 641 1	circlip A 10 X 1 G RK 11 10 9 >> G RCC --	 -82 83-	1	 (GB)
20	087 321 201	lever for cable control G >> RK 10 10 9		1	
20A	E 087 321 201 D	lever for cable control G RK 11 10 9 >> G RCC --	 -82 83-	1	 (GB)
21	* 010 321 182	round seal		1	
21A	010 321 209 C	shaft f.accelerator cable G RK 11 10 9 >> G RCC --	 -82 83-	1	 (GB)
22	010 321 215 C	lever kickdown control G >> RK 16 07 0		1	
(22)	010 321 215 E	lever kickdown control G RK 17 07 0 >> G RCC --	 -82 83-	1	 (GB)
23	N 012 228 3	spring washer B 8		1	
24	N 011 008 8	hexagon nut M 8		1	
25	010 321 221	leaf spring		1	
25A	E N 013 325 1	tensioning sleeve 6 X 22		1	
25B	010 321 227	protection cap G RK 11 10 9 >> G RCC --	 -82 83-	1	 (GB)
25C	010 321 229	spacer G RK 11 10 9 >> G RCC --	 -82 83-	1	 (GB)
25D	N 011 137 1	hexagon nut M 10 X 1 G RK 11 10 9 >> G RCC --	 -82 83-	1	 (GB)
26	N 012 038 1	lock ring B 8		1	
27	N 010 239 11	hexagon-head bolt M 8 X 18		1	
28	010 321 241 F	oil pump		1	
28A	003 321 263	gear set oil pump		1	
29	003 321 261	piston ring		2	
30	010 321 261	piston ring		2	
30A	010 321 279	plate		1	
30B	003 321 273	driver		1	
31	010 321 285	thrust washer		1	

Pos	Part Number	Name	Remarks	Qty	Model	Pos	Part Number	Name	Remarks	Qty	Model
32	N 012 006 4	lock ring B 6		5							
33	N 010 339 3	hexagon-head bolt M 6 X 40		5							
34	477 321 303 A	cover		1							
35	011 321 307	clip		1							
36	N 012 226 5	spring washer B 6		1							
37	999 072 005 09	hexagon-head bolt M 6 X 12		1							
38	010 321 359 F	oil pan		1							
39	* 010 321 371 B	gasket		1							
40	N 012 038 1	lock ring A 8		4							
41	N 010 240 16	hexagon-head bolt M 8 X 20		4							
42	E 010 321 383 B	intermediate plate		1							
43	* 010 321 385 B	gasket		2							
44	E 900 014 004 02	pan-head screw AM 5 X 15		1							
46	* 003 321 419	round seal		1							
48	N 012 228 3	spring washer B 8		4							
49	N 011 008 8	hexagon nut M 8		4							
		- -- E N D -- -									

Model	Year	MG	SG	Illustration	Restrictions	Update			
924	85	3	09	309-05		187	11:58	06.04.2005	PORSCHE PET PORSCHE

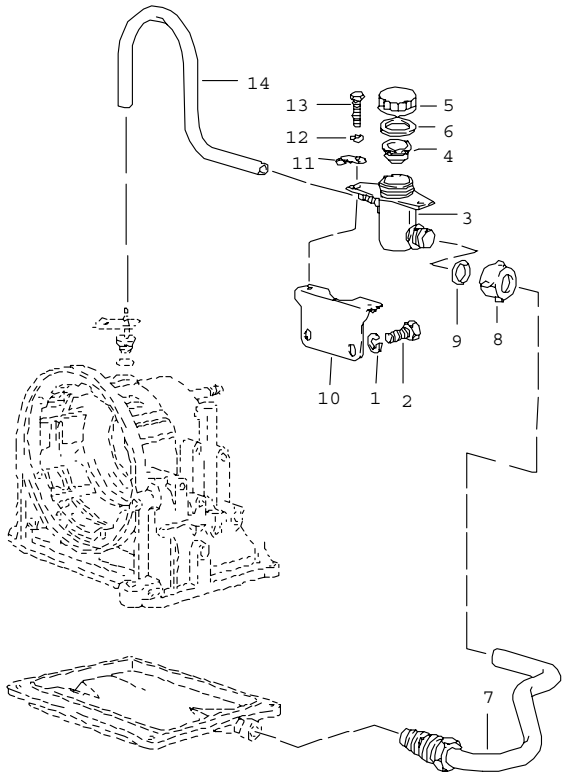

Pos	Part Number	Name	Remarks	Qty	Model
		oil inlet automatic transmission			924
1	N 012 028 1	lock ring B 10		2	
2	N 010 253 7	hexagon-head bolt M 10 X 22		2	
3	477 321 475	container		1	
4	477 321 479 A	strainer		1	
5	477 321 481	cap		1	
6	477 321 483 A	gasket		1	
7	477 321 405	filler tube		1	
8	477 321 485	union nut		1	
9	477 321 487	o-ring		2	
10	477 321 491	support		1	
11	477 321 494	packing plate		2	
12	N 012 226 5	spring washer B 6		2	
13	N 010 215 13	hexagon-head bolt M 6 X 15		2	
14	477 321 495	hose 340 MM		1	
		- -- E N D -- -			

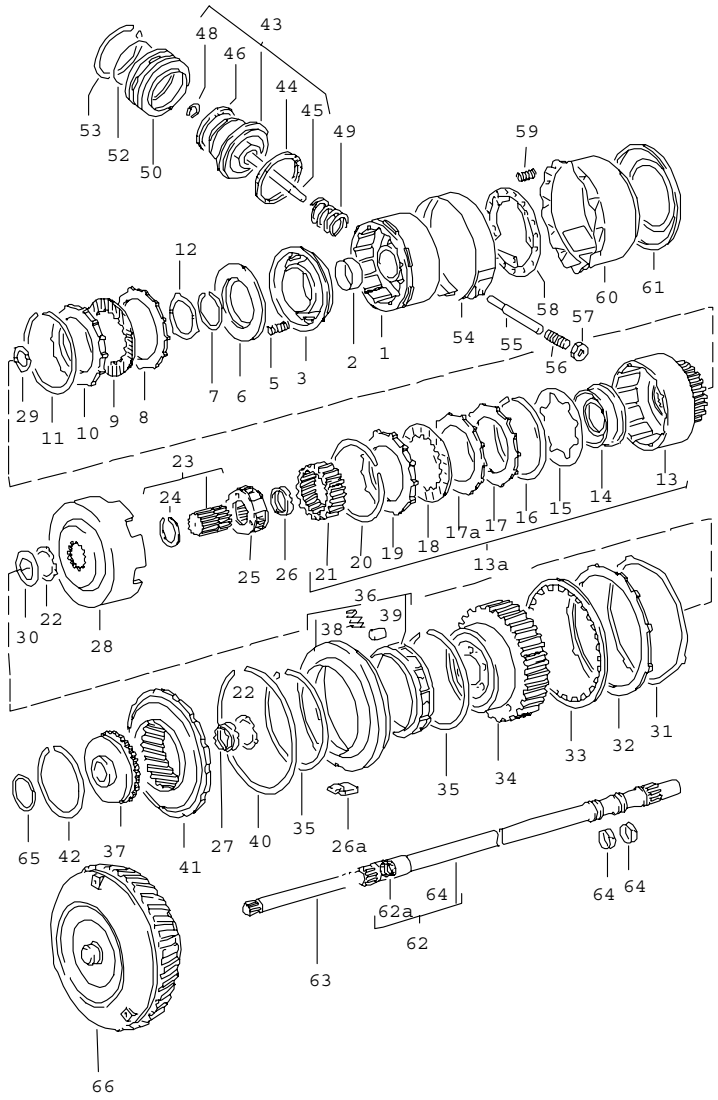

Pos	Part Number	Name	Remarks	Qty	Model
		transmission parts automatic transmission			924
1	010 323 109 C	clutch drum		1	RK RL
(1)	010 323 109 F	clutch drum G >>RCC 01 08 3		1	RCC
(1)	087 323 109	clutch drum G RCC 02 08 3>>		1	RCC
2	010 323 115	bearing sleeve		1	
3	010 323 121 B	piston		1	
5	010 323 129 A	compression spring		24	
6	010 323 131 A	concave washer		1	
7	003 323 135 A	circlip		1	
8	010 323 139	disc with external splines		4	RK RL
(8)	010 323 139 A	disc with external splines G >>RCC 01 08 3		4	RCC
(8)	087 323 139	disc with external splines G RCC 02 08 3>>		4	RCC
9	010 323 141 C	disc with external splines G >>RCC 01 08 3		4	
(9)	087 323 141 A	disc with external splines G RCC 02 08 3>>		4	RCC
10	010 323 153	pressure plate G >>RCC 01 08 3		1	
(10)	087 323 153	pressure plate G RCC 02 08 3>>		1	RCC
11	E 010 323 157	circlip 2,03 G >>RCC 01 08 3		1	
(11)	087 323 157 B	circlip 2,03 MM G RCC 02 08 3>>		1	RCC
(11)	010 323 157 A	circlip 1,50 MM G >>RCC 01 08 3		X	
(11)	087 323 157	circlip 1,50 MM G RCC 02 08 3>>		X	RCC

Pos	Part Number	Name	Remarks	Qty	Model
(11)	E 010 323 157 B	circlip 1,70 MM G >>RCC 01 08 3		X	
(11)	087 323 157 A	circlip 1,70 MM G RCC 02 08 3>>		X	RCC
(11)	010 323 157 H	circlip 2,30 MM G >>RCC 01 08 3		X	
(11)	087 323 157 C	circlip 2,30 MM G RCC 02 08 3>>		X	RCC
(11)	010 323 157 J	circlip 2,50 MM G >>RCC 01 08 3		X	
(11)	087 323 157 D	circlip 2,50 MM G RCC 02 08 3>>		X	RCC
12	010 323 161 A	thrust washer		1	
13A	010 323 205	forward clutch G >> RK 02 08 1		1	
13	087 323 209	clutch bell-housing G RK 03 08 1 >>		1	
		G RCC --		1	
14	010 323 217 A	piston		1	
15	010 323 229 D	cup spring forward clutch			
16	E 010 323 157	circlip		1	
17	010 323 237 A	pressure plate		1	
17A	010 323 139	disc with external splines forward clutch		3	
18	010 323 241 B	inner disc		4	
19	010 323 253 A	pressure plate 6,40		1	
(19)	010 323 253 B	pressure plate 6,80		X	
(19)	010 323 253 C	pressure plate 7,20		X	
(19)	010 323 253 D	pressure plate 7,60		X	
(19)	010 323 253 F	pressure plate 6,00		X	
20	E 010 323 159 B	lock ring		1	
21	010 323 273 B	ring gear		1	RK RL
21	010 323 273 C	ring gear		1	RCC
22	010 323 291	thrust washer		1	
23	010 323 285 E	sun gear		1	RK RL
23	010 323 285 F	sun gear		1	RCC
24	E N 042 451 1	snap ring A 40		1	
25	010 323 303	planet-gear carrier		1	RK RL
25	010 323 303 E	planet-gear carrier		1	RCC
26	010 323 340 D	needle-roller bearing		1	
27	010 323 339 D	needle-roller bearing		1	
28	010 323 281	driving shell		1	RK RL
28	010 323 281 F	driving shell G >>RCC 01 08 3		1	RCC
28	087 323 281	driving shell G RCC 02 08 3>>		1	RCC
29	003 323 165	thrust washer 40 G >> RK 31 07 1		1	
29	010 321 157 A	needle-roller bearing G RK 03 08 1 >>		1	
		G RCC --			
30	010 323 293 B	thrust washer		1	RK RL
30	010 323 293 C	thrust washer		1	RCC
31	010 323 295 C	spring washer G >> RK 03 03 3 G >> RL 03 03 3 G >>RCC 03 03 3		1	
32	010 323 227 A	disc with external splines		5	
33	010 323 231 C	inner disc		5	
34	090 323 805	planet-gear carrier		1	RK RL
34	010 323 805 E	planet-gear carrier		1	RCC

Pos	Part Number	Name	Remarks	Qty	Model
35	010 323 651	circlip		2	
36	010 323 383 C	free wheel lock 1st gear		1	
36A	010 323 389 E	key		1	
37	087 323 373 A	hub		1	RK RL
37	087 323 373	hub		1	RCC
38	010 323 643	compression spring		10	RK RL
38	010 323 643	compression spring		10	RCC
39	N 026 360 1	roller		10	
40	010 323 653 A	circlip		1	
41	090 323 363 A	ring gear		1	RK RL
41	090 323 363 B	ring gear		1	RCC
42	090 323 369	circlip		1	RK RL
42	010 323 369 A	circlip		1	RCC
43	010 323 511 K	piston G >>RCC 01 08 3		1	
43	087 323 512 A	piston G RCC 02 08 3>>		1	RCC
44	003 323 525 A	sealing ring		1	
45	010 323 517 D	piston rod G >>RCC 01 08 3		1	
46	010 323 487 C	sealing ring		1	
48	010 323 541 B	lock washer		1	
49	010 323 505 A	compression spring		1	
50	087 323 529	cover		1	
52	010 323 533	round seal		3	
53	010 323 537 A	circlip		1	
54	010 323 461 A	brake band		1	
55	010 323 543 A	bolt G >>RCC 01 08 3		1	
55	087 323 543	bolt G RCC 02 08 3>>		1	RCC
56	010 323 455 A	adjusting screw		1	
57	N 011 162 9	hexagon nut M 12 X 1,5		1	
58	010 323 497 C	supporting plate		1	
59	010 323 489 B	compression spring		20	
60	010 323 493 A	pipe		1	
60	010 323 493 D	pipe G >> RK 03 03 3 G >> RL 03 03 3 G >>RCC 03 03 3		1	
60	E 010 323 493 F	pipe G RK 04 03 3 >> G RL 04 03 3 >> G RCC 04 03 3>>		1	
61	010 323 479 A	piston G >> RK 03 03 3 G >> RL 03 03 3 G >>RCC 03 03 3		1	
61	010 323 477	piston G RK 04 03 3 >> G RL 04 03 3 >> G RCC 04 03 3>>		1	
62	087 323 553 A	turbine shaft		1	
62A	087 323 559	gasket G RK 30 01 0 >>		1	
63	010 323 561 A	oil pump shaft		1	
64	010 323 557 A	piston ring		2	
65	010 323 345 C	adjusting shim		1	
65	010 323 346 C	adjusting shim		X	
66	082 323 571	converter		1	
		- -- E N D -- -			

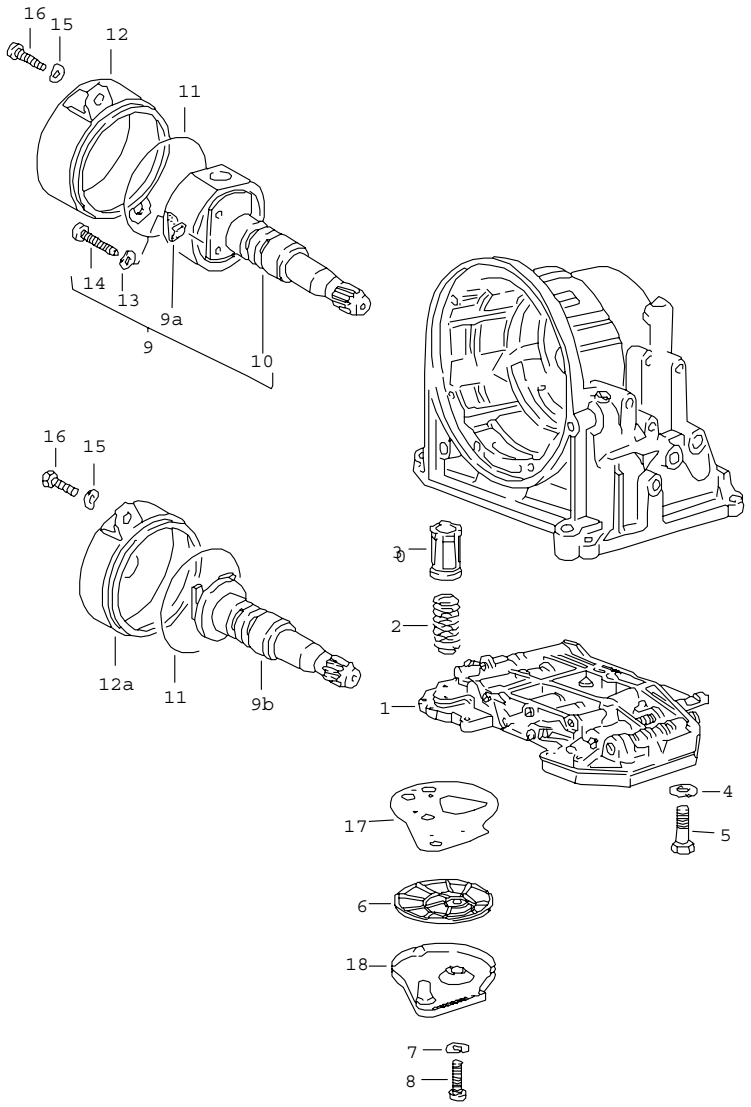

Pos	Part Number	Name	Remarks	Qty	Model
		valve body regulator oil strainer automatic transmission			924
1	087 325 032 H	hydraulic control unit G >> RK 18 08 1		1	RK
1	087 325 032 H	valve body G RK 19 08 1 >>		1	RK
		use also: 010.325.277			
1	090 325 037	valve body	83-	1	RCC
-	010 325 277	manual valve G RK 19 08 1 >>		1	
2	003 325 417	compression spring		1	
3	003 325 405 F	piston		1	
4	N 012 226 5	spring washer B 6		11	
5	N 010 346 5	hexagon-head bolt M 6 X 30		11	
6	010 325 421 A	oil strainer		1	
7	N 012 222 4	spring washer B 5		2	
8	E 900 014 004 02	pan-head screw AM 5 X 15		2	
9	087 325 041	regulator		1	RK RL
9B	087 325 041 B	regulator		1	RCC
9A	010 325 329	strainer		1	
10	E 087 325 305	governor shaft		1	RK RL
11	* 011 519 345	round seal		1	
12	089 325 371	cover		1	RK RL
12	089 325 371 A	cover		1	RCC
13	N 012 222 4	spring washer		2	
14	N 014 153 1	oval-head screw M 5 X 40		2	
15	N 012 228 3	spring washer B 8		2	

Pos	Part Number	Name	Remarks	Qty	Model	Pos	Part Number	Name	Remarks	Qty	Model
16	N 010 240 16	hexagon-head bolt 8 X 20		2							
17	010 325 443	gasket		1							
18	010 325 429 A	cover		1							
		- -- E N D -- -									

Model	Year	MG	SG	Illustration	Restrictions	Update				
924	85	3	11	311-00		187	11:59	06.04.2005	PORSCHE	PET	PORSCHE

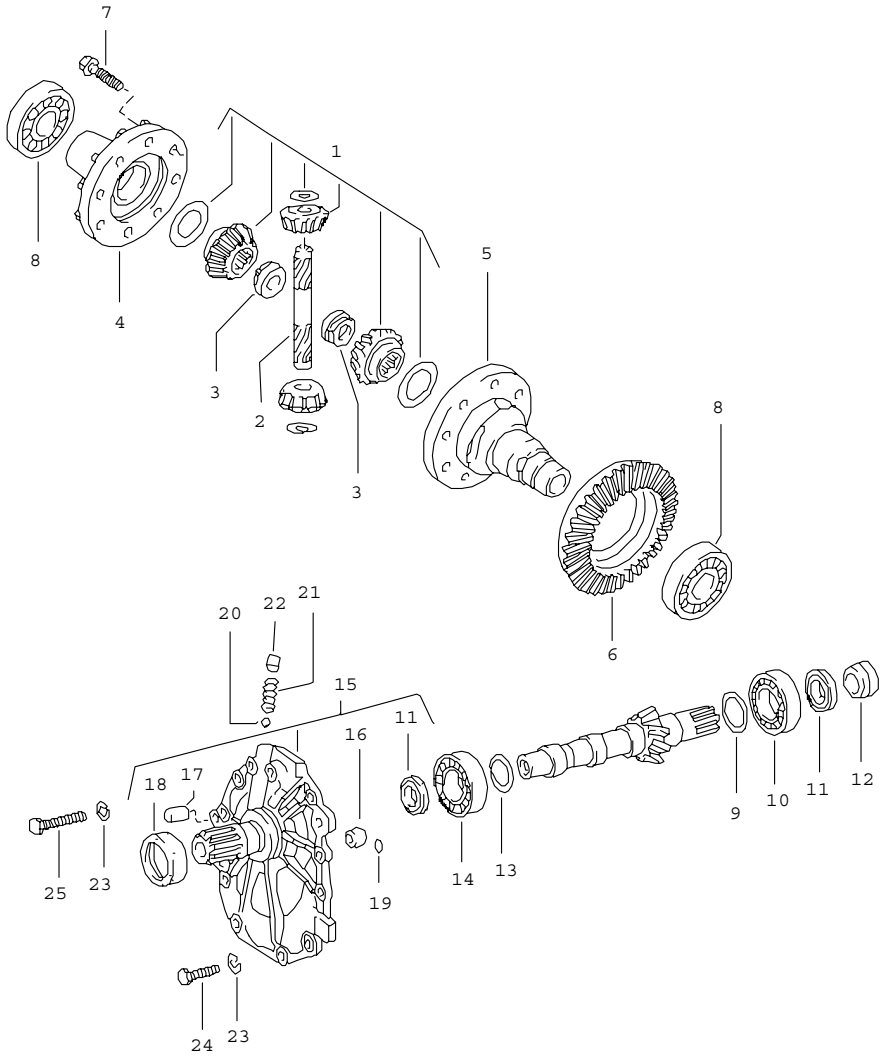

Pos	Part Number	Name	Remarks	Qty	Model
		differential automatic transmission			924
1	* 090 598 081	repair kit differential		1	
2	087 409 177	axle		1	
3	016 409 161	nut		2	
4	087 409 365	cover		1	
5	087 409 121	differential housing		1	
6	087 409 143 G	ring gear and pinion shaft 11:38		1 1	RK RCC
7	087 409 135 A	hexagon-head bolt M 10 X 1 X 24		10	
8	113 517 185 C	taper roller bearing		2	
9	087 409 641 D	adjusting shim 1,10		1	
(9)	087 409 641 E	adjusting shim 1,125		X	
(9)	087 409 641 F	adjusting shim 1,15		X	
(9)	087 409 641 G	adjusting shim 1,175		X	
(9)	087 409 641 H	adjusting shim 1,20		X	
(9)	087 409 641 J	adjusting shim 1,225		X	
(9)	087 409 641 K	adjusting shim 1,25		X	
(9)	087 409 641 L	adjusting shim 1,275		X	
(9)	087 409 641 M	adjusting shim 1,30		X	
(9)	087 409 641 N	adjusting shim 1,325		X	
(9)	087 409 641 P	adjusting shim 1,35		X	
(9)	087 409 641 Q	adjusting shim 1,375		X	

Pos	Part Number	Name	Remarks	Qty	Model
(9)	087 409 641 R	adjusting shim 1,40		X	
(9)	087 409 641 S	adjusting shim 1,425		X	
(9)	087 409 641 T	adjusting shim 1,45		X	
(9)	087 409 641 AA	adjusting shim 1,475		X	
(9)	087 409 641 AB	adjusting shim 1,50		X	
(9)	087 409 641 AC	adjusting shim 1,525		X	
(9)	087 409 641 AD	adjusting shim 1,55		X	
(9)	087 409 641 AE	adjusting shim 1,575		X	
(9)	087 409 641 AF	adjusting shim 1,60		X	
(9)	087 409 641 AG	adjusting shim 1,625		X	
(9)	087 409 641 AH	adjusting shim 1,65		X	
(9)	087 409 641 AJ	adjusting shim 1,675		X	
(9)	087 409 641 AK	adjusting shim 1,70		X	
(9)	087 409 641 AL	adjusting shim 1,725		X	
(9)	087 409 641 AM	adjusting shim 1,75		X	
(9)	087 409 641 AN	adjusting shim 1,775		X	
(9)	087 409 641 AP	adjusting shim 1,80		X	
(9)	087 409 641 AQ	adjusting shim 1,825		X	
(9)	087 409 641 AR	adjusting shim 1,85		X	
(9)	087 409 641 AS	adjusting shim 1,875		X	
(9)	087 409 641 AT	adjusting shim 1,90		X	
10	087 409 551 C	taper roller bearing		1	
11	087 409 085 B	radial shaft seal		2	
12	087 409 639 A	bush		1	
13	082 519 141 AE	adjusting shim 1,10		1	
(13)	082 519 141 AF	adjusting shim 1,125		X	
(13)	082 519 141 AG	adjusting shim 1,15		X	
(13)	082 519 141 AH	adjusting shim 1,175		X	
(13)	082 519 141 AJ	adjusting shim 1,20		X	
(13)	082 519 141 AK	adjusting shim 1,225		X	
(13)	082 519 141 AL	adjusting shim 1,25		X	
(13)	082 519 141 AM	adjusting shim 1,275		X	
(13)	082 519 141 AN	adjusting shim 1,30		X	
(13)	082 519 141 AP	adjusting shim 1,325		X	
(13)	082 519 141 AQ	adjusting shim 1,35		X	
(13)	082 519 141 AR	adjusting shim 1,375		X	
(13)	082 519 141 AS	adjusting shim 1,40		X	
(13)	082 519 141 AT	adjusting shim 1,425		X	
(13)	082 519 141 BA	adjusting shim 1,45		X	

Pos	Part Number	Name	Remarks	Qty	Model
(13)	082 519 141 BB	adjusting shim 1,475		X	
(13)	082 519 141 BC	adjusting shim 1,50		X	
(13)	082 519 141 BD	adjusting shim 1,525		X	
(13)	082 519 141 BE	adjusting shim 1,550		X	
(13)	082 519 141 BF	adjusting shim 1,575		X	
(13)	082 519 141 BG	adjusting shim 1,60		X	
(13)	082 519 141 BH	adjusting shim 1,625		X	
(13)	082 519 141 BJ	adjusting shim 1,650		X	
(13)	082 519 141 BK	adjusting shim 1,675		X	
(13)	082 519 141 BL	adjusting shim 1,70		X	
(13)	082 519 141 BM	adjusting shim 1,725		X	
(13)	082 519 141 BN	adjusting shim 1,750		X	
(13)	082 519 141 BP	adjusting shim 1,775		X	
(13)	082 519 141 BQ	adjusting shim 1,80		X	
(13)	082 519 141 BR	adjusting shim 1,825		X	
(13)	082 519 141 BS	adjusting shim 1,850		X	
(13)	082 519 141 BT	adjusting shim 1,875		X	
(13)	082 519 141 CA	adjusting shim 1,90		X	
14	003 519 251	taper roller bearing		1	
15	087 409 523 B	cover		1	
16	019 301 153	dowel sleeve		1	
17	N 022 301 1	straight pin A 10 X 20		1	
18	* 010 409 568	radial shaft seal		1	
19	089 409 637 A	sealing ring		2	
20	N 025 657 1	ball		1	
21	089 409 713	spring		1	
22	087 409 095	cover		2	
23	N 012 038 1	lock ring A 8		11	
24	N 010 233 6	hexagon-head bolt M 8 X 28		9	
25	N 040 276 1	hexagon-head bolt M 8 X 52		2	
		- -- E N D -- -			

Model	Year	MG	SG	Illustration	Restrictions	Update	12:00	06.04.2005	PORSCHE PET PORSCHE
924	85	3	12	312-00		187			

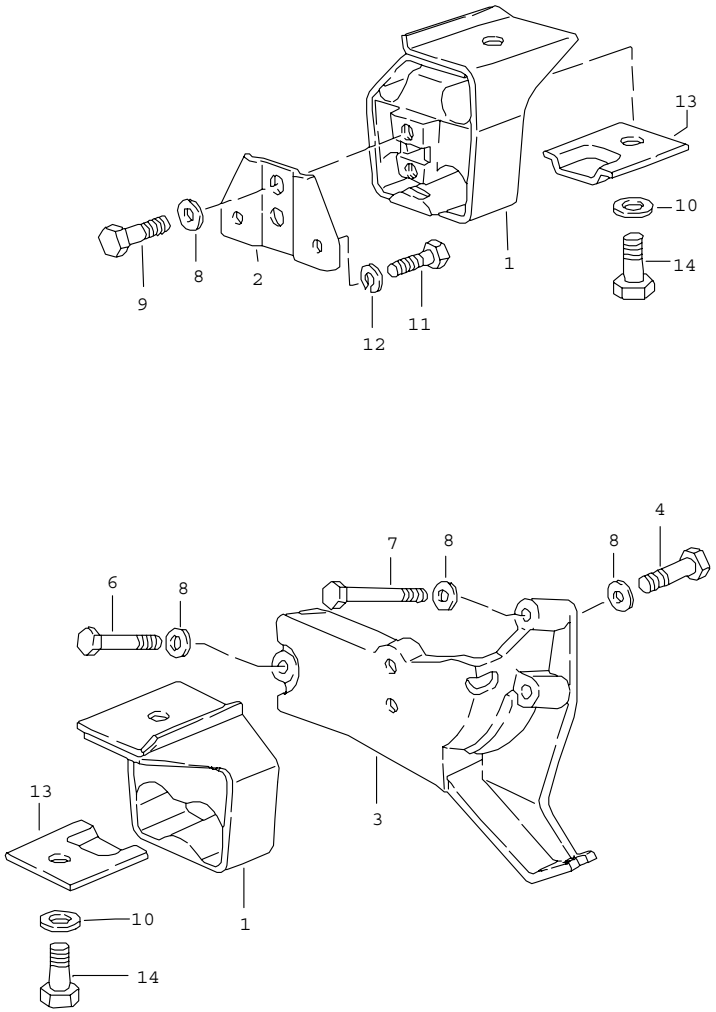

Pos	Part Number	Name	Remarks	Qty	Model
		transmission suspension automatic transmission			924
1	477 399 153 J	transmission mounting		2	
2	477 399 169 C	suspension plate	/R	1	
3	477 399 171 E	bracket	/L	1	
4	N 010 244 11	hexagon-head bolt M 8 X 30		2	
6	N 040 262 2	hexagon-head bolt M 8 X 50		2	
7	N 010 385 3	hexagon-head bolt M 8 X 85		1	
8	N 011 525 13	washer A 8,4		7	
9	N 010 242 12	hexagon-head bolt M 8 X 25		1	
10	900 025 008 09	washer A 10,5		2	
11	N 010 240 7	hexagon-head bolt M 8 X 20		2	
12	N 012 009 3	lock ring A 8		2	
13	477 399 281	stop plate		2	
14	N 010 254 6	hexagon-head bolt M 10 X 25		2	
		- -- E N D -- -			

Model	Year	MG	SG	Illustration	Restrictions	Update		
924	85	3	98	REP		187	9:42	12.04.2005

Pos	Part Number	Name	Remarks	Qty	Model
		repair kits			
>>	> 477 300 912	set of seals for transmission comprising:	80	1	924 VQ VR UV
-	088 301 699 A	sealing ring		1	
-	928 303 120 01	shaft seal		1	
-	016 409 399 B	radial shaft seal		2	
-	113 301 185 A	sealing ring		1	
-	E 016 301 235 B	gasket		1	
-	088 311 599	sealing ring		2	
-	999 113 275 40	shaft seal		1	
-	016 301 455	gasket		1	
>>	> 477 300 912 A	set of seals for transmission comprising:	81-	1	924 MD ME MF
-	088 301 699 A	sealing ring		1	
-	928 303 120 01	shaft seal		1	
-	016 409 399 B	radial shaft seal		2	
-	113 301 185 A	sealing ring		1	
-	016 301 235 C	gasket		1	
-	088 311 599	sealing ring		2	
-	999 113 275 40	shaft seal		1	
-	016 301 455 A	gasket		1	
-	005 311 599	sealing washer		1	
>>	> 931 300 911 00	set of seals for transmission comprising:		1	TURBO G31.01/02/03
-	999 113 183 40	radial shaft seal		2	
-	477 301 191 A	gasket		1	
-	001 301 227	radial shaft seal		1	
-	999 113 247 40	radial shaft seal		1	
-	999 701 392 40	o-ring		1	

Model	Year	MG	SG	Illustration	Restrictions	Update		
924	85	3	98	REP		187	9:42	12.04.2005

Pos	Part Number	Name	Remarks	Qty	Model
>>	> 477 398 001	set of seals for automatic transmission comprising:		1	924 RK RL RCC
-	010 321 182	round seal		1	
-	010 321 371 B	gasket		1	
-	010 321 385 B	gasket		1	
-	003 321 419	round seal		2	
-	010 323 117	sealing ring		1	
-	010 323 119	sealing ring		1	
-	010 323 487 C	sealing ring		1	
-	003 323 525 A	sealing ring		1	
-	010 323 533	round seal		3	
-	087 409 085 B	radial shaft seal		2	
-	087 409 133	radial shaft seal		1	
-	016 409 399 B	radial shaft seal		2	
-	087 409 529 B	radial shaft seal		2	
-	010 409 549 B	round seal		1	
-	087 409 549	round seal		1	
-	010 409 568	radial shaft seal		1	
-	089 409 637 A	sealing ring		1	
-	011 519 345	round seal		3	
-	N 028 201 2	round seal		1	
>>	> 090 598 081	repair kit differential comprising: differential pinions large differential pinions small		1 2 2	RK RL VQ RCC VR UV MD ME MF MB MX
-	011 519 215	thrust washer for differential pinions large		2	

Model	Year	MG	SG	Illustration	Restrictions	Update		
924	85	3	98	REP		187	9:42	12.04.2005

Pos	Part Number	Name	Remarks	Qty	Model
-	016 409 170	thrust washer for differential pinions small use also: 088.409.249 A 088.409.249 B		2	
>>	> 928 116 901 00	repair kit clutch operating cylinder comprising: bellows lock washer boot dust boot ring		1 1 1 1 1 2	TURBO G31.01/02/03
		- -- E N D -- -			

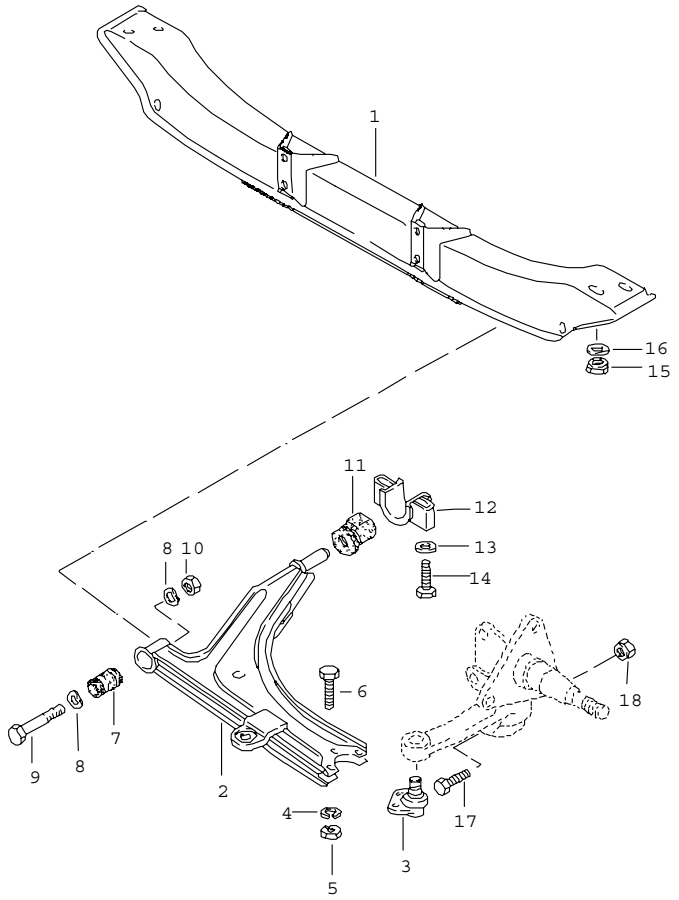

Pos	Part Number	Name	Remarks	Qty	Model
		cross member control arm			
1	477 407 321 G	cross member	/LL	1	
1	477 407 321 G	cross member	/RL	1	924
(1)	478 407 321	cross member	/RL	1	TURBO,GT
2	477 407 153 F	control arm F >>92CN4 02197 F >>93CN1 00305		2	924 TURBO
(2)	171 407 153 D	control arm F 92CN4 02198>> F 93CN1 00306>>		2	924 TURBO
-	477 407 151 J	control arm with POS. 2,3,7,11	/L -81	1	
-	477 407 152 J	control arm with POS. 2,3,7,11	/R -81	1	
3	171 407 365 G	ball joint 17 MM $		2	
4	N 042 001 1	lock ring A 7		6	
5	N 011 007 7	hexagon nut M 7		6	
6	N 040 204 3	hexagon-head bolt M 7 X 20		6	
7	171 407 182 D	rubber mounting		2	
8	N 012 232 5	spring washer B 12		4	
9	N 010 190 4	hexagon-head bolt M 12 X 1,5 X 90		2	
10	N 021 131 1	lock nut M 12 X 1,5		2	
11	477 407 181 A	rubber mounting		2	
12	477 407 169	clip		2	
13	477 407 425	washer		4	
14	N 040 321 1	hexagon-head bolt M 10 X 65		4	

Pos	Part Number	Name	Remarks	Qty	Model	Pos	Part Number	Name	Remarks	Qty	Model
15	N 011 185 6	hexagon nut M 10		4							
16	N 015 402 1	washer 10,5		4							
17	N 010 445 6	hexagon-head bolt M 10 X 45		2							
18	N 021 130 2	lock nut M 10		2							
		- -- E N D -- -									

Model	Year	MG	SG	Illustration	Restrictions	Update	12:00	06.04.2005	PORSCHE PET PORSCHE
924	85	4	01	401-05		187			

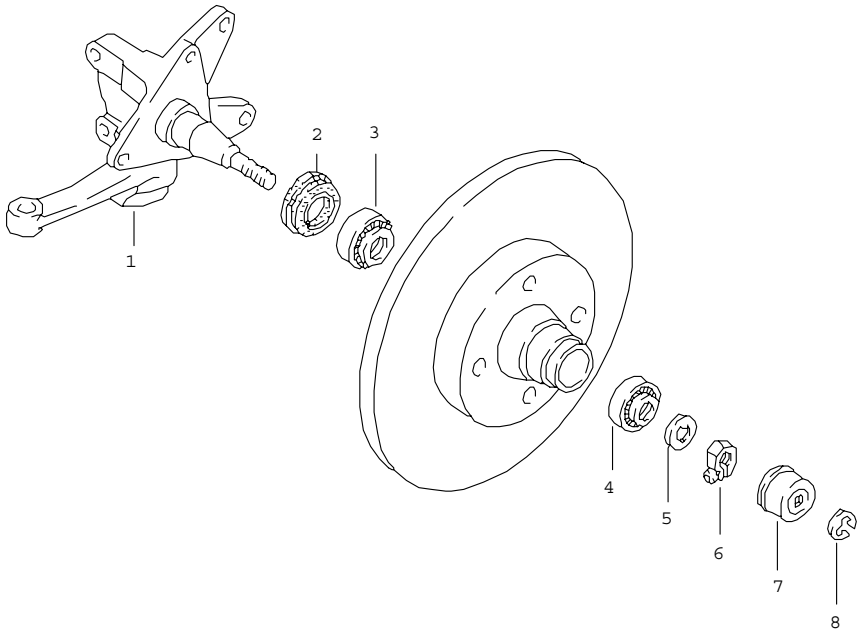

Pos	Part Number	Name	Remarks	Qty	Model
		steering knuckle			924
1	477 407 311 K	steering knuckle	/L	1	
(1)	E 477 407 312 K	steering knuckle	/R	1	
2	311 405 641 B	sealing ring		2	
3	311 405 625 D	taper roller bearing		2	
4	311 405 645	taper roller bearing		2	
5	E 311 405 661	thrust washer		2	
6	131 405 670	clamping nut		2	
7	477 405 691	cap	/L	1	
(7)	477 405 692	cap	/R	1	
8	900 116 003 02	circlip		1	
		- -- E N D -- -			

Model	Year	MG	SG	Illustration	Restrictions	Update	12:00	06.04.2005	PORSCHE PET PORSCHE
924	85	4	01	401-10		187			

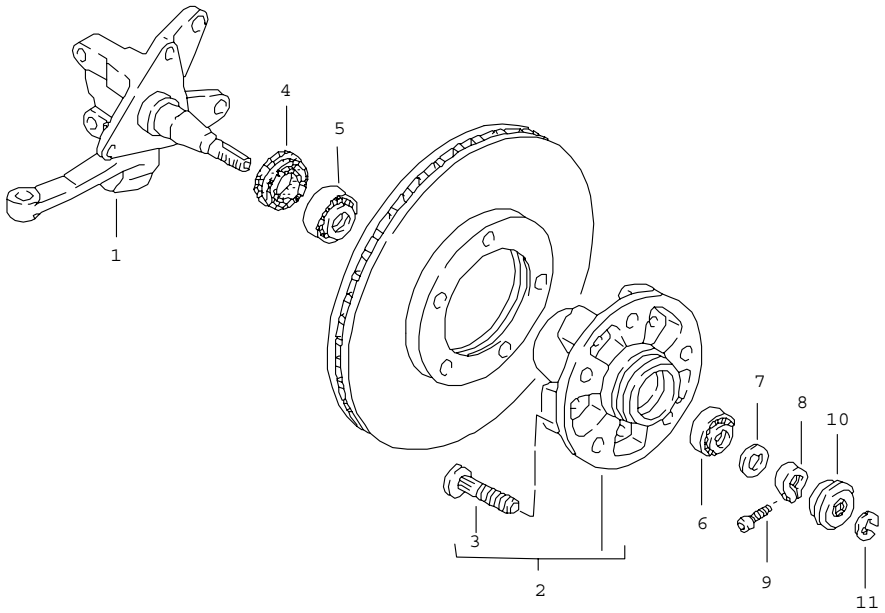

Pos	Part Number	Name	Remarks	Qty	Model
		steering knuckle			924 M 471 TURBO,GT
1	477 407 311 L	steering knuckle	/L	1	
(1)	477 407 312 L	steering knuckle	/R	1	
2	477 405 065 B	front wheel hub		2	
3	904 341 671 00	wheel bolt		10	
4	477 405 641	radial sealing ring		2	
5	999 059 098 00	taper roller bearing		2	
6	999 059 065 00	taper roller bearing		2	
7	911 341 663 00	thrust washer		2	
8	911 341 673 00	clamping nut		2	
9	999 119 001 01	pan-head screw		2	
10	477 405 691 C	cap	/L	1	
(10)	477 405 692 C	cap	/R	1	
		- -- E N D -- -			

Model	Year	MG	SG	Illustration	Restrictions	Update	12:01	06.04.2005	PORSCHE PET PORSCHE
924	85	4	02	402-00		187			

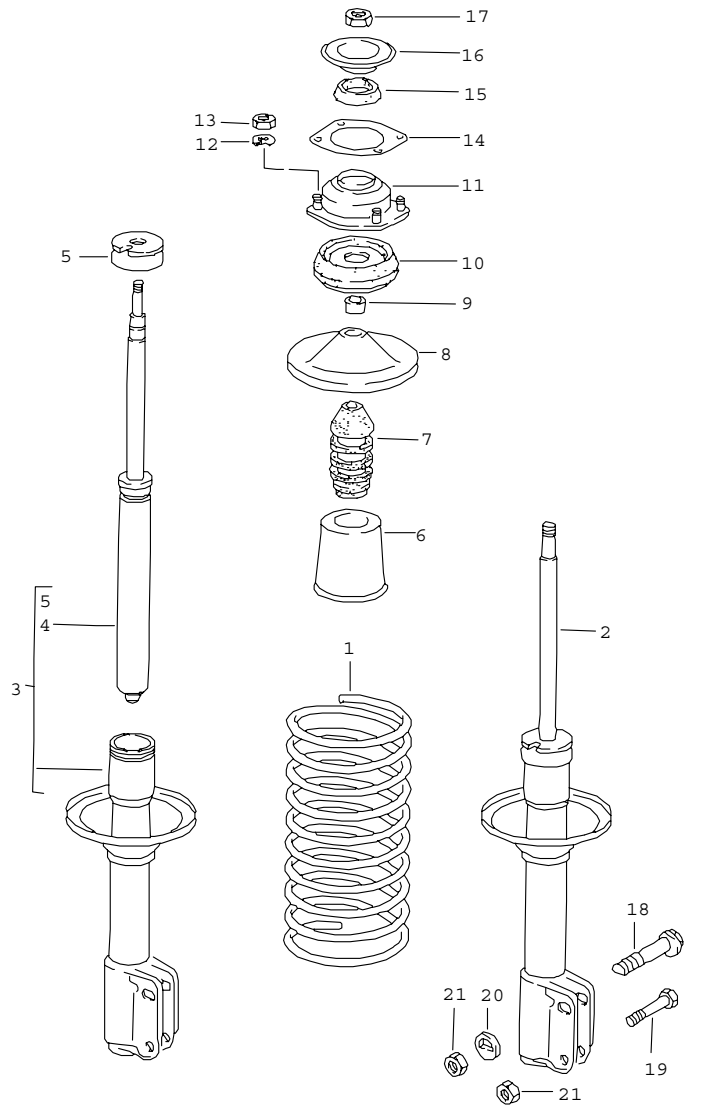

Pos	Part Number	Name	Remarks	Qty	Model
		springs vibration damper			
1	477 411 105 G	coil spring 1 set marked	-80	1	924
	954	red			
(1)	477 411 105 G	coil spring 1 set marked		1	GT
	954	red			
(1)	477 411 105 M	coil spring 1 set marked	-80	1	924 M 404 M 471
	954	green			
(1)	477 411 105 M	coil spring 1 set marked	81-	1	924
	954	green			
(1)	477 411 105 Q	coil spring 1 set marked		1	TURBO
	954	blue			
2	944 343 031 14	vibration damper	/L	1	924
(2)	944 343 032 14	vibration damper	/R	1	924
2	944 343 031 12	vibration damper	/L	1	TURBO,GT
(2)	944 343 032 12	vibration damper	/R	1	TURBO,GT
3	944 343 031 13	vibration damper - koni -	/L	1	924
(3)	944 343 032 13	vibration damper - koni -	/R	1	924
3	944 343 031 11	vibration damper - koni -	/L	1	TURBO,GT
(3)	944 343 032 11	vibration damper - koni -	/R	1	TURBO,GT
2	937 343 051 02	vibration damper - bilstein -	/L	1	GT
2	937 343 052 02	vibration damper - bilstein -	/R	1	GT

Pos	Part Number	Name	Remarks	Qty	Model	Pos	Part Number	Name	Remarks	Qty	Model
4	477 412 059 A	insert - koni -		2	924						
(4)	944 343 059 00	insert - koni -		2	TURBO,GT						
5	171 412 045	union nut		2							
6	171 412 135	boot		2							
7	171 412 303 C	rubber stop		2							
8	133 412 341	concave washer		2							
9	E 823 412 365	spacer sleeve		2							
10	944 343 071 00	suspension strut mounting		2							
11	477 412 345	bearing flange		2							
12	N 012 228 3	spring washer B 12		8							
13	N 011 008 8	hexagon nut M 8		8							
(14)	133 412 367	sealing ring		2							
15	477 412 411	stop ring		2							
16	477 412 147	stop		2							
17	N 022 150 1	lock nut VM 14 X 1,5		2							
18	171 407 265	eccentric screw		2							
19	900 082 058 02	hexagon-head bolt M 12 X 1,5 X 50		2							
20	944 343 175 00	eccentric washer		2							
21	N 022 141 4	lock nut VM 12 X 1,5		4							
		- -- E N D -- -									

Model	Year	MG	SG	Illustration	Restrictions	Update	12:01	06.04.2005	PORSCHE PET PORSCHE
924	85	4	02	402-05		187			

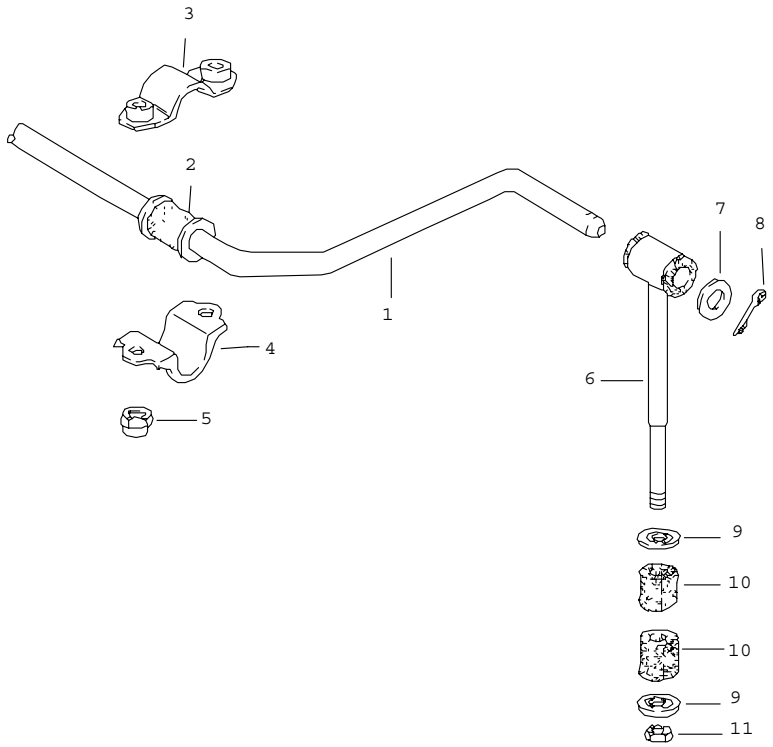

Pos	Part Number	Name	Remarks	Qty	Model
		stabiliser			
		F >>92CN4 02197 F >>93CN1 00305			924 TURBO, GT
1	477 411 309 R	stabiliser 21 $		1	
(1)	477 411 309 L	stabiliser 23 $		1	
2	477 411 313 K	stabiliser mounting 21 $		2	
(2)	477 411 313 H	stabiliser mounting 23 $		2	
3	477 411 023	intermediate piece		2	
4	477 411 319	clip		2	
5	900 910 022 09	lock nut VM 8		4	
6	477 411 057 N	push rod 21 $		2	
(6)	477 411 057 K	push rod 23 $		2	
7	477 411 317 E	washer 21 $		2	
(7)	477 411 317 B	washer 23 $		2	
8	N 012 536 1	cotter pin 4 X 30		2	
9	477 411 043	concave washer stabiliser mounting		4	
10	477 411 041 B	rubber mounting		4	
11	N 011 185 6	hexagon nut M 10		2	
		- -- E N D -- -			

Model	Year	MG	SG	Illustration	Restrictions	Update			
924	85	4	02	402-10		187	12:01	06.04.2005	PORSCHE PET PORSCHE

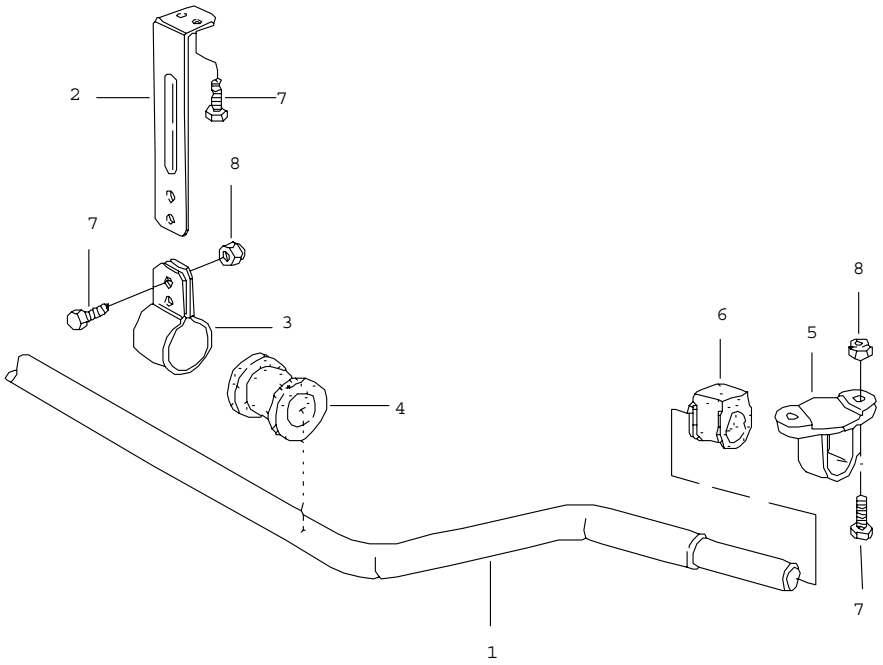

Pos	Part Number	Name	Remarks	Qty	Model
		stabiliser			
		F 92CN4 02198>> F 93CN1 00306>>			924 TURBO
1	944 343 707 00	stabiliser 20 $		1	
1	944 343 706 00	stabiliser 21,5 $		1	
2	944 343 733 00	suspension		2	
3	944 343 731 00	clip		2	
4	477 411 053 G	rubber bush 20 $		2	
(4)	477 411 053 N	rubber bush 21,5 $	-83	2	
(4)	477 411 053 J	rubber bush 21,5 $	84-	2	
5	944 343 735 00	bearing bracket	/L	1	
(5)	944 343 736 00	bearing bracket	/R	1	
6	171 411 314 A	rubber bush		2	
7	900 075 079 02	hexagon-head bolt M 8 X 22		12	
8	900 910 022 09	lock nut VM 8		8	
		- -- E N D -- -			

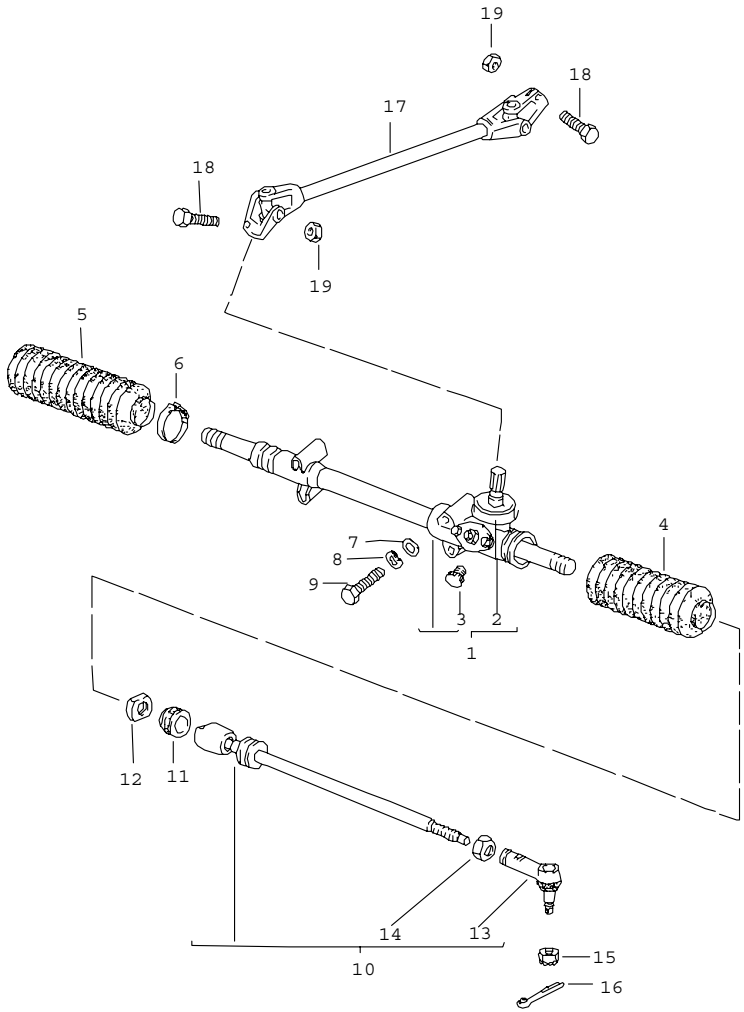

Pos	Part Number	Name	Remarks	Qty	Model
		steering gear tie rod			
1	477 419 061 C	steering gear	/LL	1	
(1)	478 419 061 A	steering gear	/RL	1	924
(1)	478 419 061 B	steering gear	/RL	1	TURBO,GT
2	477 419 321	cap		1	
3	477 419 115	plug		1	
4	171 419 831 C	boot	/L	1	
5	171 419 832 C	bellows	/R	1	
6	823 419 843	terminal 45		1	
7	900 025 007 02	washer A 8,4		2	
8	N 012 228 3	spring washer B 8		4	
9	N 010 360 6	hexagon-head bolt M 8 X 60		4	
10	477 419 803 B	tie rod F >>92DN4 02093 F >>93DN1 00185		2	924,TURBO 924 TURBO
(10)	944 347 033 01	tie rod see technical information NR. 22 F 92DN4 02094>> F 93DN1 00186>>		2	 924 TURBO
(10)	944 347 033 00	tie rod		2	GT
11	477 419 827	stop ring		2	
12	171 419 855	nut M 22 X 1,5		2	
13	477 419 815	ball joint F >>92DN4 02093 F >>93DN1 00185		2	924,TURBO 924 TURBO
(13)	944 347 333 01	ball joint F 92DN4 02094>> F 93DN1 00186>>		2	 924 TURBO
(13)	944 347 333 00	ball joint		2	GT
14	N 011 163 3	hexagon nut M 14 X 1,5		2	

Pos	Part Number	Name	Remarks	Qty	Model
15	N 011 212 2	castle nut M 12 X 1,5		2	
16	N 012 532 1	cotter pin 3 X 25		2	
17	477 419 951 F	drive shaft	/LL	1	
(17)	478 419 951 C	drive shaft	/RL	1	924
(17)	478 419 951 D	drive shaft	/RL	1	TURBO,GT
18	N 010 335 7	hexagon-head bolt M 8 X 35		2	
19	900 910 022 09	lock nut M 8		2	
		- -- E N D -- -			

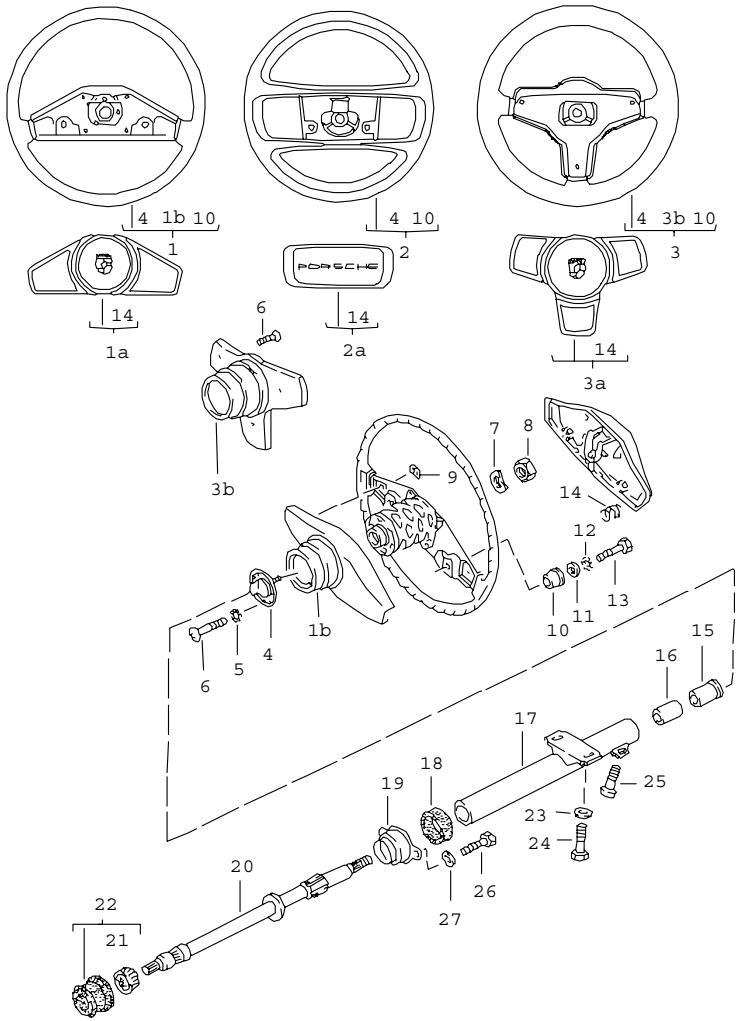

Pos	Part Number	Name	Remarks	Qty	Model
		steering wheel steering column			
(1)	U 477 419 091 M	steering wheel	-81	1	924
1A	477 419 669	cap	-81	1	924
1B	E 171 419 791 A	lining	-81	1	924
2	477 419 091 G	sports steering wheel 361 MM$		1	
(2)	477 419 091 H	sports steering wheel leather 363 MM $		1	
	1AJ	black			
	3NG	brown			
2A	477 419 681	cap		1	
	1AJ	black			
	3NG	brown			
3	944 347 084 01	sports steering wheel 380 MM $		1	
	1DB	black			
	4RB	brown			
3	477 419 091 K	sports steering wheel leather 380 MM $		1	
	1AJ	black			
	3NG	brown			
(3)	477 419 091 L	sports steering wheel leather with elevated hub 380 MM $		1	
	1AJ	black			
	3NG	brown			
3A	944 347 859 01	cap		1	
	1DB	black			
	4RB	brown			
3B	944 347 057 00	lining		1	

Pos	Part Number	Name	Remarks	Qty	Model
	1DB	black			
	4RB	brown			
4	113 415 660 A	slip ring		1	
5	N 012 131 2	shake-proof washer J 3,7		3	
6	900 146 029 02	oval-head screw AM 3,5 X 10		6	
7	N 012 238 5	spring washer B 16		1	
8	900 078 006 01	hexagon nut M 16 X 1,5		1	
9	113 857 113	clamping washer 4 X 12	-81	2	924
10	321 419 779	insulating bush		3	
(10)	321 419 779 A	insulating bush for four-spoke steering wheel		3	
11	900 025 002 02	washer A 4,3		3	
12	N 042 122 2	shake-proof washer A 4,3		3	
13	N 010 261 3	hexagon-head bolt M 4 X 15		3	
14	171 419 697	spring		3	
15	171 419 341	support ring		1	
16	171 419 549	clamping sleeve		1	
17	477 419 563 B	steering column tube		1	
18	411 417 613	rubber mounting		1	
19	411 417 605	support ring		1	
20	477 419 505 J	steering column	/LL	1	
20	477 419 505 J	steering column	/RL	1	
20	E 478 419 505 B	steering column	/RL	1	TURBO,GT
21	113 415 511	needle-roller bearing		1	
22	477 419 059	sealing ring		1	
23	111 129 720	washer A 8,4		2	
24	411 417 549	shear bolt		2	
25	N 014 707 4	pan-head screw M 8 X 15		1	
26	999 072 005 09	hexagon-head bolt M 6 X 12		2	
27	211 805 243	spring washer		2	
		- -- E N D -- -			

Model	Year	MG	SG	Illustration	Restrictions	Update	12:37	06.04.2005	PORSCHE PET PORSCHE
924	85	5	01	501-00		187			

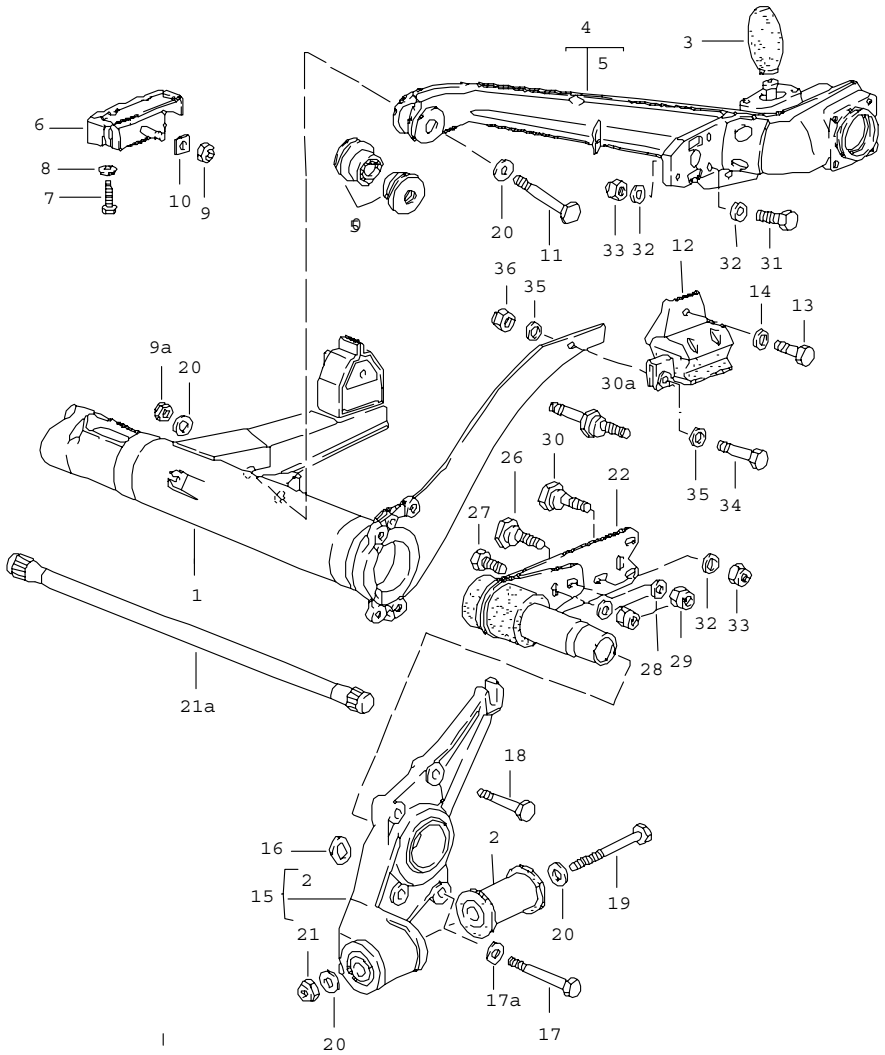

Pos	Part Number	Name	Remarks	Qty	Model
		rear axle carrier rear-axle trailing arm			
1	477 500 053 F	rear axle carrier without stabiliser		1	924
(1)	477 500 053 F	rear axle carrier with stabiliser		1	924
(1)	E 477 500 053 E	rear axle carrier		1	TURBO,GT
2	477 501 069 A	rubber bush		2	
3	311 501 191	rubber stop		2	
4	477 501 035 D	rear-axle trailing arm	/L	1	924,TURBO
(4)	477 501 036 D	rear-axle trailing arm	/R	1	924,TURBO
(4)	E 937 331 021 01	rear-axle trailing arm	/L	1	GT
(4)	937 331 022 01	rear-axle trailing arm	/R	1	GT
5	477 501 541	silentbloc		4	
6	477 501 089	mounting		2	
7	N 040 272 2	hexagon-head bolt M 10 X 35		4	
8	900 025 008 09	washer A 10,5		4	
9	N 022 149 2	lock nut VM 10		2	
9A	N 021 131 1	lock nut M 12 X 1,5		2	
10	477 501 697	washer		2	
11	N 010 190 4	hexagon-head bolt M 12 X 90		2	
12	944 331 075 00	supporting mount	/L	1	
(12)	944 331 076 00	supporting mount	/R	1	
13	900 075 040 02	hexagon-head bolt M 10 X 20		2	
14	N 012 230 6	spring washer B 10		8	
15	944 331 059 00	bearing flange	/L	1	

Pos	Part Number	Name	Remarks	Qty	Model
(15)	944 331 060 00	bearing flange	/R	1	
16	477 501 667	washer		2	
17	N 010 465 5	hexagon-head bolt M 10 X 65		2	
17A	N 012 230 6	spring washer B 10		8	
18	900 074 063 02	hexagon-head bolt M 10 X 55		6	
19	900 082 059 02	hexagon-head bolt M 12 X 1,5 X 115		2	
20	803 199 347	washer		8	
21	N 022 141 4	lock nut VM 12 X 1,5		2	
21A	311 511 115 D	torsion bar 22 $	/L -80	1	924
(21A)	311 511 116 D	torsion bar 22 $	/R -80	1	924
(21A)	944 333 115 00	torsion bar 23,5 $	/L	1	
(21A)	944 333 116 00	torsion bar 23,5 $	/R	1	
22	477 511 201	strut	/L	1	
22	477 511 202	strut	/R	1	
26	911 333 303 00	eccentric screw		2	
27	911 333 305 00	hexagon-head bolt		2	
28	911 333 307 00	washer		4	
29	900 910 092 02	lock nut VM 16 X 1,5		4	
30	477 511 519	camber eccentric		2	924
30A	477 511 515	camber eccentric only together with stabiliser 14 MM $		2	
31	N 010 138 1	hexagon-head bolt M 12 X 1,5 X 38		4	
32	N 011 531 7	washer A 13		8	
33	N 022 141 4	lock nut VM 12 X 1,5		4	
34	N 010 242 12	hexagon-head bolt M 8 X 25		2	
35	900 025 007 02	washer A 8,4		4	
36	N 022 146 1	lock nut VM 8		2	

- -- E N D -- -

Model	Year	MG	SG	Illustration	Restrictions	Update	12:37	06.04.2005	PORSCHE PET PORSCHE
924	85	5	01	501-05		187			

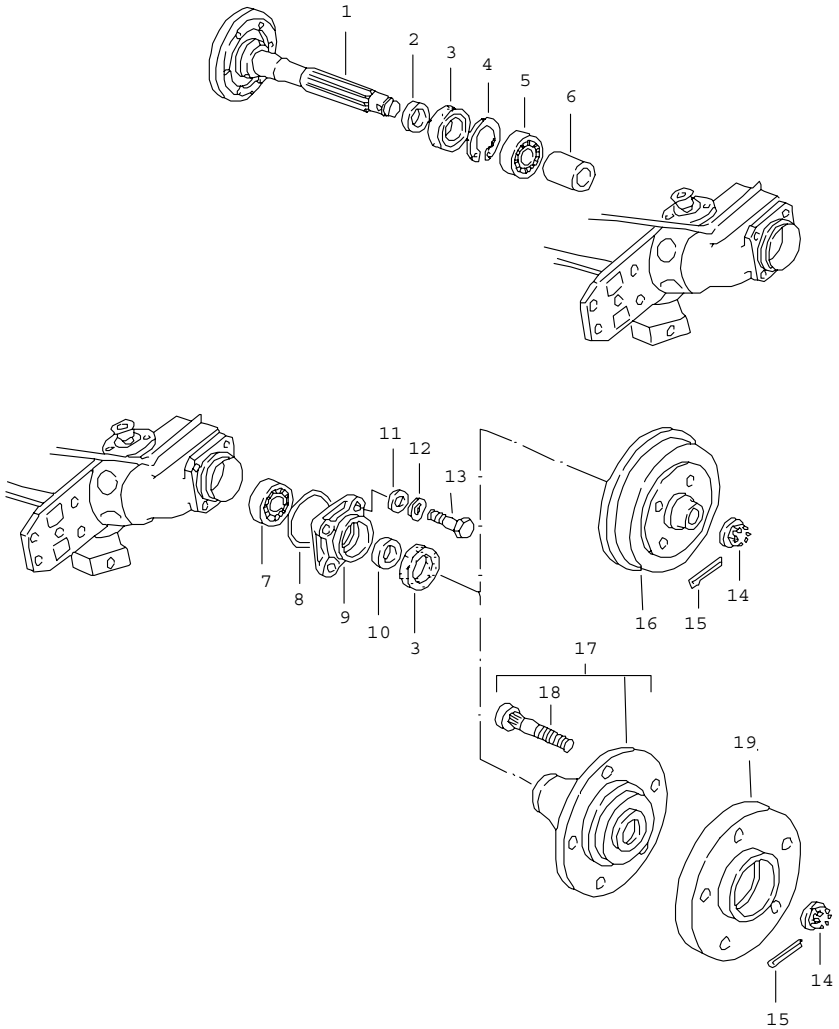

Pos	Part Number	Name	Remarks	Qty	Model
		rear wheel shaft			
1	477 501 263	rear wheel shaft		2	
2	113 501 305	spacer ring inner		2	
3	113 501 315 H	sealing ring		4	
4	937 331 133 00	circlip 62 X 2,00 MM		2	
(4)	937 331 133 01	circlip 62 X 2,05 MM		X	
(4)	937 331 133 02	circlip 62 X 2,10 MM		X	
(4)	937 331 133 03	circlip 62 X 2,15 MM		X	
(4)	937 331 133 04	circlip 62 X 2,20 MM		X	
5	113 501 283	deep-groove ball bearing		2	
(5)	937 331 583 00	deep-groove ball bearing		2	GT
6	E 113 501 243	spacer tube		2	
7	E 113 501 277 A	cylindrical-roller bearing		2	
8	113 501 291 B	sealing ring		2	
9	113 501 311	cover		2	
10	E 113 501 303	spacer ring outer		2	
11	311 501 317	washer 10,2 X 18		8	
12	N 012 231 1	spring washer A 10		8	
13	311 501 325	hexagon-head bolt		8	
(13)	N 010 450 5	hexagon-head bolt only together with disc brake	82-	8	
14	311 501 221	castle nut		2	
15	900 021 025 02	cotter pin 5 X 45		2	
16	477 501 615 A	brake drum		2	

Pos	Part Number	Name	Remarks	Qty	Model
		only together with disc brake			
17	477 501 065	wheel hub		2	
18	911 331 671 00	wheel bolt		10	
19	477 501 701	spacer tube		2	
		- -- E N D -- -			

Pos	Part Number	Name	Remarks	Qty	Model

Model	Year	MG	SG	Illustration	Restrictions	Update			
924	85	5	01	501-10		187	12:37	06.04.2005	PORSCHE PET PORSCHE

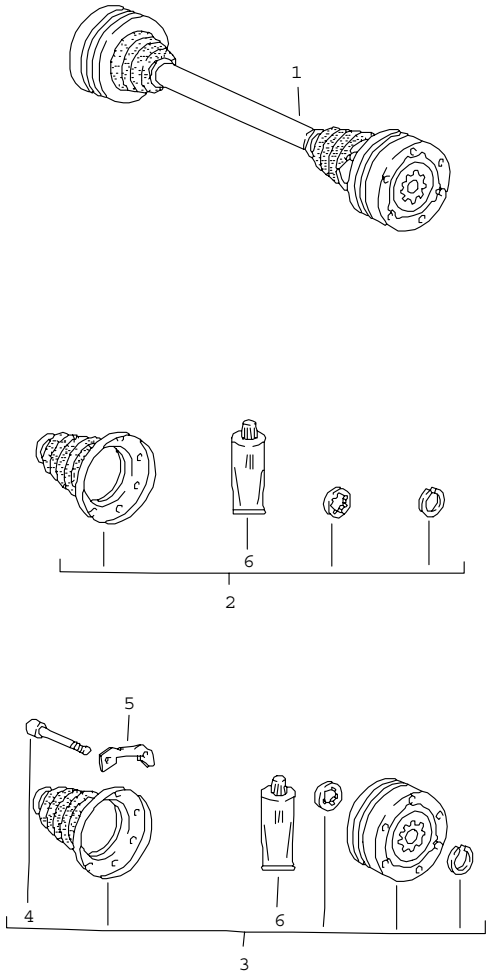

Pos	Part Number	Name	Remarks	Qty	Model
		drive shaft			
1	477 501 103	drive shaft		2	924,TURBO
1	937 332 021 01	drive shaft		2	GT
1	477 501 101 A	drive shaft	/L	1	AUT.
1	E 477 501 102 A	drive shaft	/R	1	AUT.
2	944 331 903 00	repair kit dust bellows		4	
3	944 331 901 00	repair kit constant-velocity joint		4	
4	893 407 237	pan-head screw		24	
5	944 332 191 00	plate		12	
6	000 043 005 00	grease for drive shaft 1 90-g tube optimoly		X	
		- -- E N D -- -			

Model	Year	MG	SG	Illustration	Restrictions	Update	12:37	06.04.2005	PORSCHE PET PORSCHE
924	85	5	02	502-00		187			

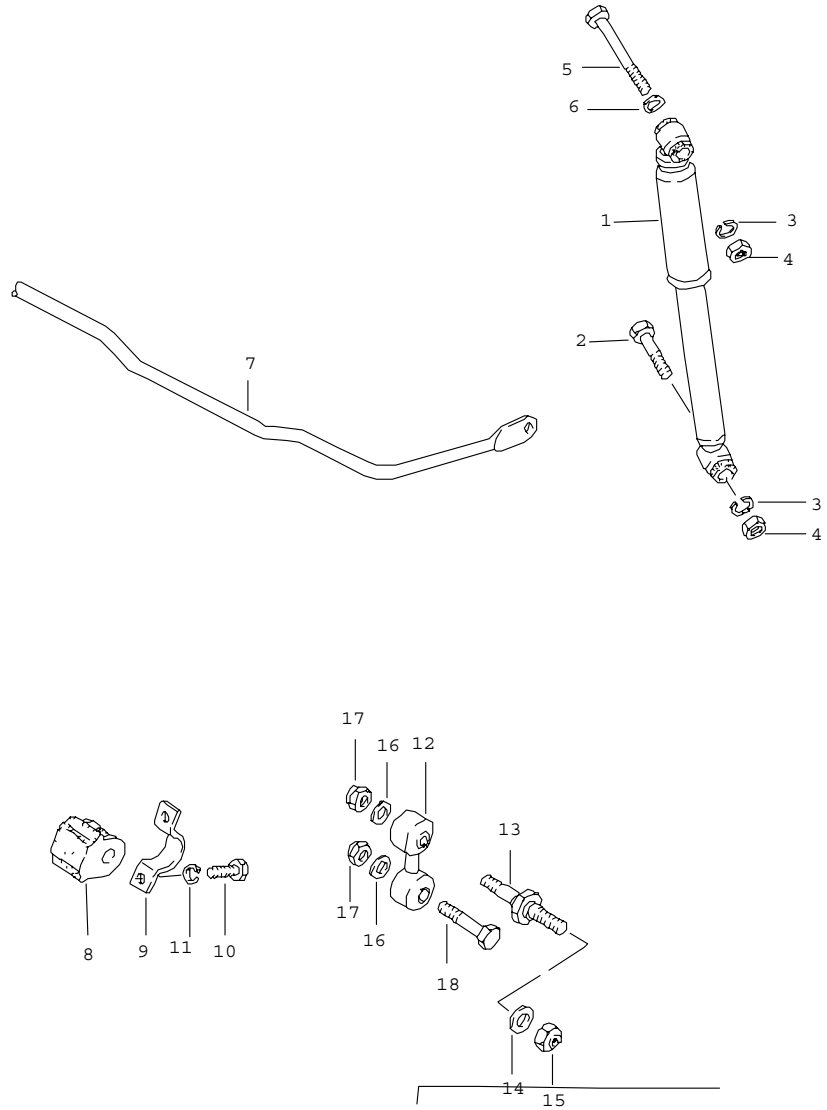

Pos	Part Number	Name	Remarks	Qty	Model
		vibration damper stabiliser			
1	477 513 031 C	vibration damper - fichtel + sachs -		2	924
(1)	477 513 031 H	vibration damper - fichtel + sachs -		2	TURBO,GT
(1)	477 513 031 E	vibration damper - koni -		2	924
(1)	944 333 031 00	vibration damper - koni -		2	TURBO,GT
(1)	477 513 031 A	vibration damper - bilstein -		2	GT
2	N 010 156 3	hexagon-head bolt M 12 X 1,5 X 70		2	
3	N 012 042 4	lock ring B 12		4	
4	N 011 020 8	hexagon nut M 12 X 1,5		4	
5	900 082 044 02	hexagon-head bolt M 12 X 1,5 X 125		2	
6	043 101 129	washer 12,2 X 22		2	
		stabiliser			
7	477 511 411 A	stabiliser 14 $		1	
(7)	477 511 411	stabiliser 16 $		1	GT
8	477 411 313 F	rubber mounting 14 $		2	
(8)	477 411 313 A	stabiliser mounting 16 $		2	GT
9	113 411 333	retaining bow		2	
10	900 075 085 02	hexagon-head bolt M 8 X 20		4	
11	900 027 015 02	lock ring B 8		4	
12	477 511 051 A	stabiliser mounting		2	
13	477 511 515	camber eccentric		2	

Pos	Part Number	Name	Remarks	Qty	Model	Pos	Part Number	Name	Remarks	Qty	Model
14	N 011 531 4	washer A 13		2							
15	N 022 141 4	lock nut M 12 X 1,5		2							
16	900 025 008 09	washer A 10,5		4							
17	N 022 149 2	lock nut M 10		4							
18	N 010 452 4	hexagon-head bolt M 10 X 52		2							
		- -- E N D -- -									

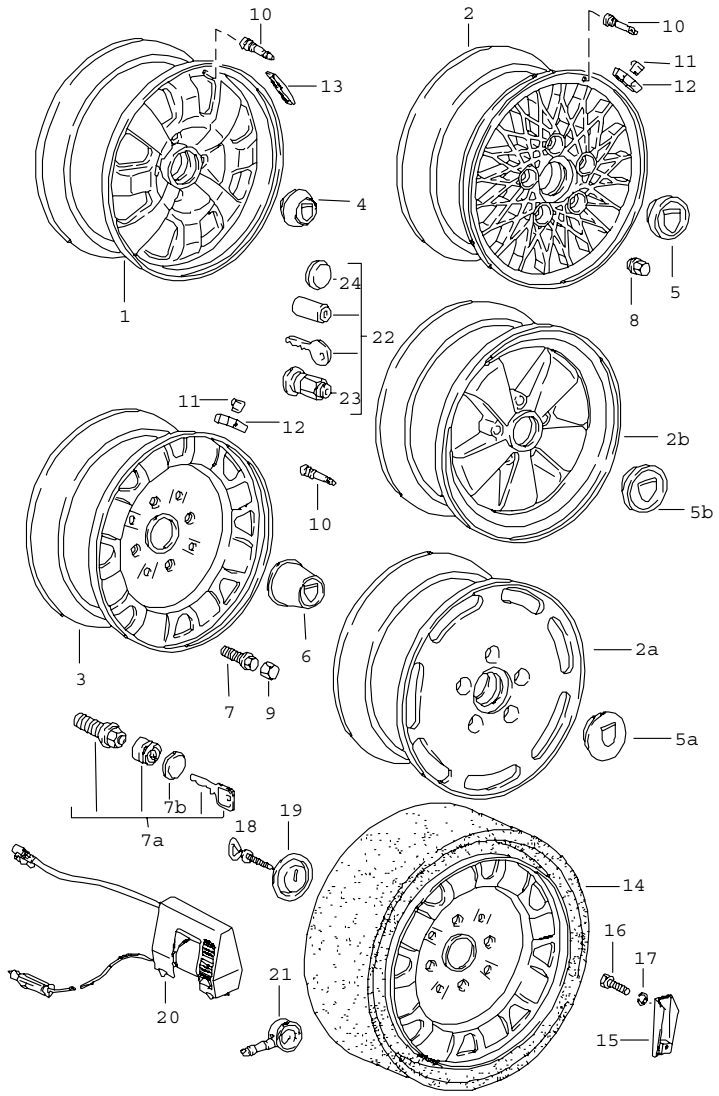

Pos	Part Number	Name	Remarks	Qty	Model
		disc wheel			
1	477 601 031 B	alloy wheel 6 J X 14, 4 LOCH ET 20 silver metallic		4	924
(1)	E 477 601 031 D	alloy wheel 6 J X 14, 4 LOCH ET 20 black		4	924
(2)	477 601 031 H	cast spoked wheel 6 J X 15, 4 LOCH ET 20 silver metallic		4	
(2)	477 601 031 J	disc wheel 6 J X 15, 4 LOCH ET 20 black		4	
2	477 601 025 B	cast spoked wheel 6 J X 15, 5 LOCH ET 53 silver metallic		4	
2A	477 601 026 D	forged wheel 6 J X 16, 5 LOCH ET 53 silver metallic		4	TURBO
2B	911 361 020 41	alloy wheel 7 J X 15, 5 LOCH ET 23,3 black star rim flange polished		4	GT
(2B)	911 362 115 00	alloy wheel 7 J X 16, 5 LOCH ET 23,3 black star rim flange polished	/V	2	GT
(2B)	911 362 117 00	alloy wheel 8 J X 16 5- hole ET 23,3 black star rim flange polished	/H	2	GT
3	E 477 601 029 A	steel wheel 5,5 J X 14 4- hole		4	

Pos	Part Number	Name	Remarks	Qty	Model
(3)	477 601 030 A	steel wheel 5,5 J X 15 5- hole for winter use use also: N 020.112.1		4	TURBO 924,M 471
4	477 601 151 N	hub cap alloy wheel		4	924
5	477 601 051 C	hub cap cast spoked wheel 4- hole		4	
(5)	928 361 032 01	hub cap cast spoked wheel 5- hole		4	
5A	477 601 051 D	hub cap forged wheel		4	TURBO
5B	911 361 032 28	hub cap		4	GT
6	477 601 151 E	hub cap steel wheel 4- hole		4	924
-	901 361 031 01	hub cap steel wheel 5- hole		4	
7	431 601 139	screw M 14 X 1,5 X 25,5 for 477.601.029.A		16	924
(7)	477 601 139 B	screw M 14 X 1,5 X 25 for 477.601.031 B/D		16	924
(7)	477 601 139 C	screw M 14 X 1,5 X 70 for 477.601.031.H		16	
7A	477 601 041	lock 1 set for 4- hole 6 J X 14		1	
(7A)	477 601 041 A	lock 1 set for 4- hole 6 J X 15		1	
7B	928 361 310 00	cap		4	
8	999 182 003 36	wheel nut		20	
(8)	N 020 112 1	ball seat nut A 14 for steel rim only 5- hole		20	924,TURBO
9	321 601 173 A	cap		16	924
	01C	black			
10	900 265 001 50	rubber valve 15,2 $		4	924,TURBO
(10)	900 265 001 50	rubber valve		4	GT
-	911 361 561 01	valve support		4	GT
11	928 361 420 01	retainer spring for balance weight		X	924,TURBO
(12)	928 361 410 00	balance weight 10 G		X	924,TURBO
(12)	928 361 411 00	balance weight 20 G		X	924,TURBO
(12)	928 361 412 00	balance weight 30 G		X	924,TURBO
(12)	928 361 413 00	balance weight 40 G		X	924,TURBO
12	928 361 414 00	balance weight 50 G		X	924,TURBO
(12)	928 361 415 00	balance weight 60 G		X	924,TURBO
(12)	928 361 416 00	balance weight 70 G		X	924,TURBO
(12)	928 361 417 00	balance weight 80 G		X	924,TURBO
(13)	901 361 410 00	balance stick-on weight 10 G		X	924,GT

Pos	Part Number	Name	Remarks	Qty	Model
(13)	901 361 411 00	balance stick-on weight 20 G		X	924,GT
(13)	901 361 412 00	balance stick-on weight 30 G		X	924,GT
13	901 361 413 00	balance stick-on weight 40 G		X	924,GT
(13)	901 361 414 00	balance stick-on weight 50 G		X	924,GT
(13)	901 361 415 00	balance stick-on weight 60 G		X	924,GT
(13)	901 361 416 00	balance stick-on weight 70 G		X	924,GT
(13)	901 361 417 00	balance stick-on weight 80 G		X	924,GT
		emergency wheel			
14	477 601 011	emergency wheel 5 1/2 J X 14 with collapsible tire 4- hole B 78 - 14 SST		1	
(14)	E 477 601 015 A	emergency wheel 5 1/2 J X 15 with collapsible tire 5- hole 165/15		1	
(14)	E 477 601 015 A	emergency wheel 5 1/2 J X 15 with collapsible tire 5- hole 165/15		1	
(14)	911 361 028 11	emergency wheel 5 1/2 J X 15 with collapsible tire 5- hole 165/ 15		1	GT
15	477 813 191	support		1	
16	E N 010 251 2	hexagon-head bolt M 10 X 18		1	
17	900 027 016 02	lock ring		1	
18	914 722 104 10	winged screw M 10 X 55		1	
(18)	914 722 104 10	winged screw M 10 X 75		1	
19	477 813 157	washer		1	
20	911 361 510 02	small electric compressor		1	
21	911 722 201 02	tyre pressure gauge		1	
22	928 361 047 03	wheel nut lockable 1 set		1	TURBO,GT
23	928 361 306 03	wheel nut lockable without lock		4	TURBO,GT
24	928 361 310 00	cap		4	TURBO,GT
		- -- E N D -- -			

Model	Year	MG	SG	Illustration	Restrictions	Update	12:38	06.04.2005	PORSCHE PET PORSCHE
924	85	6	02	602-00		187			

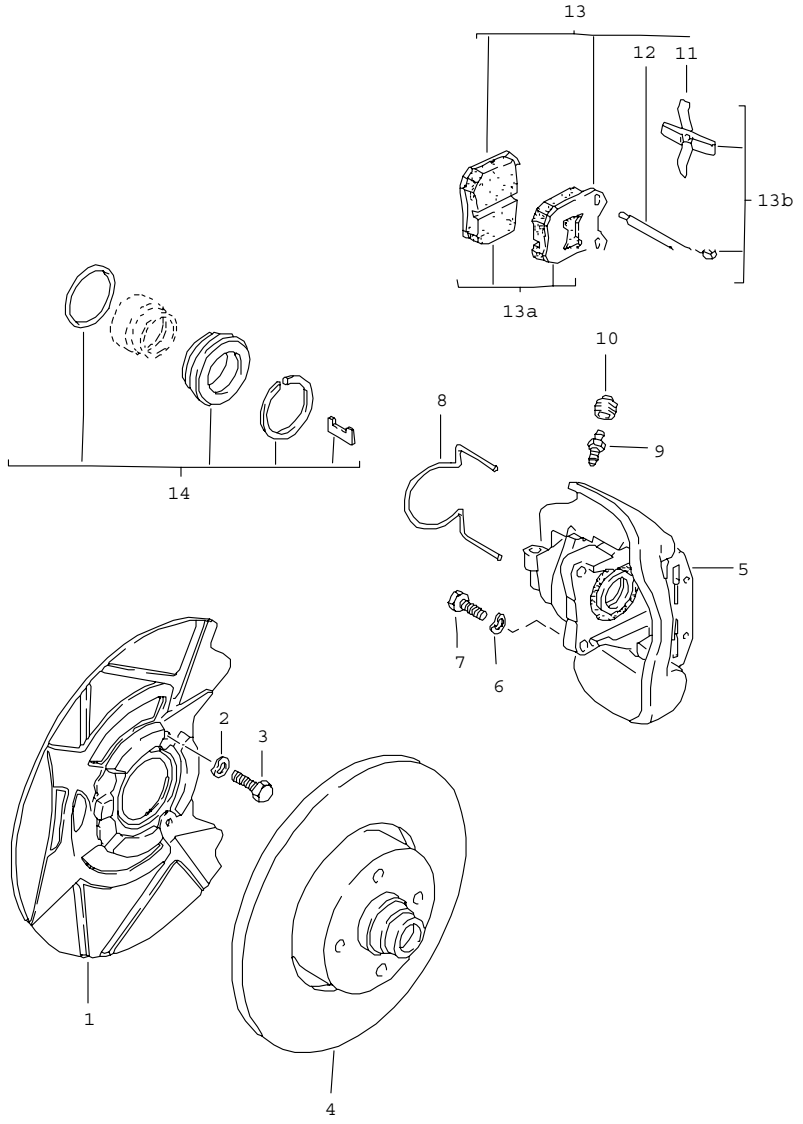

Pos	Part Number	Name	Remarks	Qty	Model
		disc brake front axle			924
1	E 477 407 165 E	cover plate		2	
2	N 012 234 5	spring washer B 7		6	
3	N 010 226 2	hexagon-head bolt M 7 X 10		6	
4	477 405 583 B	brake disc		2	
5	E 477 615 107	floating calliper		1	
(5)	477 615 108	floating calliper		1	
6	900 028 014 02	spring washer B 12		4	
7	N 010 137 1	hexagon-head bolt M 12 X 1,5 X 35		4	
8	803 615 169	guide spring	/L	1	
(8)	E 803 615 170	guide spring	/R	1	
9	113 615 273 A	ventilation valve		2	
10	211 611 483	dust boot		2	
11	* 803 615 269 C	expanding spring		2	
12	* 803 615 261 B	retaining pin		4	
13	A 477 698 151 A	set of brake pads		1	
13A	928 352 951 02	set of brake pads		1	
13B	477 698 163	parts set		1	
14	E 803 698 471 C	set of seals		1	
		- -- E N D -- -			

Model	Year	MG	SG	Illustration	Restrictions	Update	12:38	06.04.2005	PORSCHE PET PORSCHE
924	85	6	02	602-05		187			

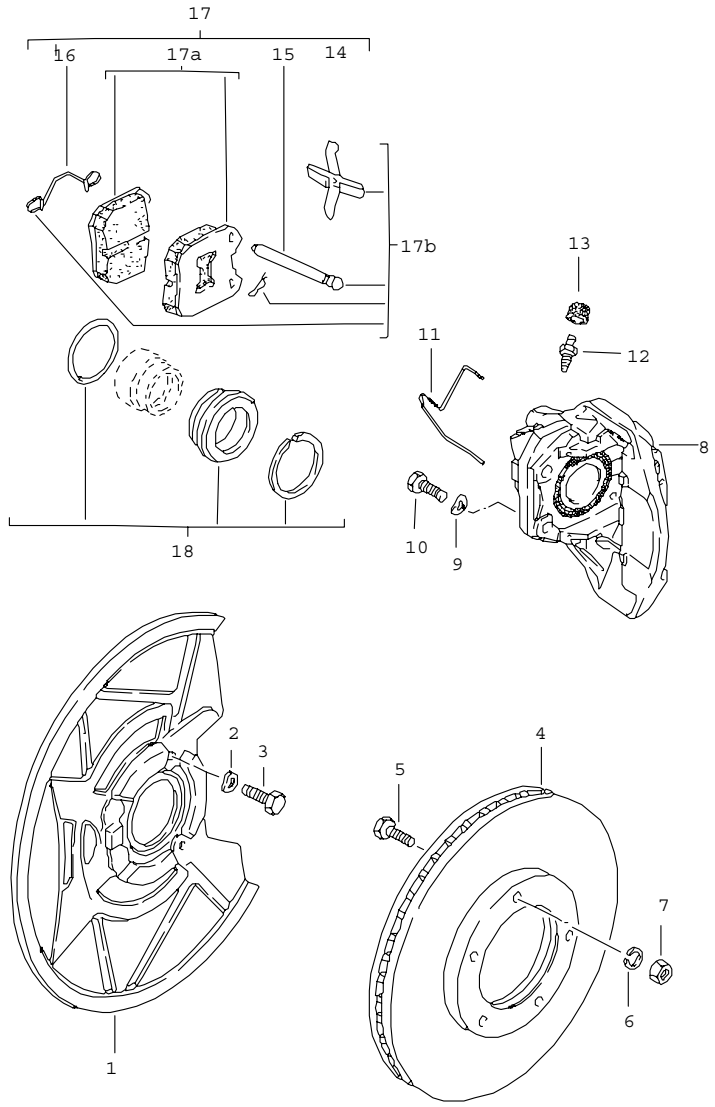

Pos	Part Number	Name	Remarks	Qty	Model
		disc brake front axle			924,M 471 TURBO,GT
1	477 407 165 F	cover plate		2	924,TURBO
(1)	937 351 803 00	cover plate	/L	1	GT
(1)	937 351 804 00	cover plate	/R	1	GT
2	N 012 234 5	spring washer B 7		6	
3	N 010 226 2	hexagon-head bolt M 7 X 10		6	
4	477 405 083 A	brake disc		2	
5	900 075 079 02	hexagon-head bolt M 8 X 22		10	
6	N 012 241 1	spring washer B 8		10	
7	900 076 025 02	hexagon nut M 8		10	
8	E 477 615 109	floating calliper	/L	1	
(8)	E 477 615 110	floating calliper	/R	1	
9	900 028 014 02	spring washer B 12		4	
10	N 040 108 1	hexagon-head bolt M 12 X 1,5 X 40		4	
11	431 615 169	guide spring		2	
12	928 351 945 00	ventilation valve		2	
13	211 611 483	dust boot		2	
14	* 928 351 935 00	expanding spring		2	
15	* 928 351 936 00	retaining pin		4	
16	* 477 615 112	retaining spring		2	
17	A 944 351 951 00	set of brake pads		1	
17A	944 351 951 02	set of brake pads		1	
17A	944 351 951 02	set of brake pads		1	M 475
17B	944 351 952 01	mounting parts		1	
18	* 928 351 941 00	set of seals		1	

Pos	Part Number	Name	Remarks	Qty	Model	Pos	Part Number	Name	Remarks	Qty	Model
		- -- E N D -- -									

Model	Year	MG	SG	Illustration	Restrictions	Update	12:38	06.04.2005	PORSCHE PET PORSCHE
924	85	6	03	603-00		187			

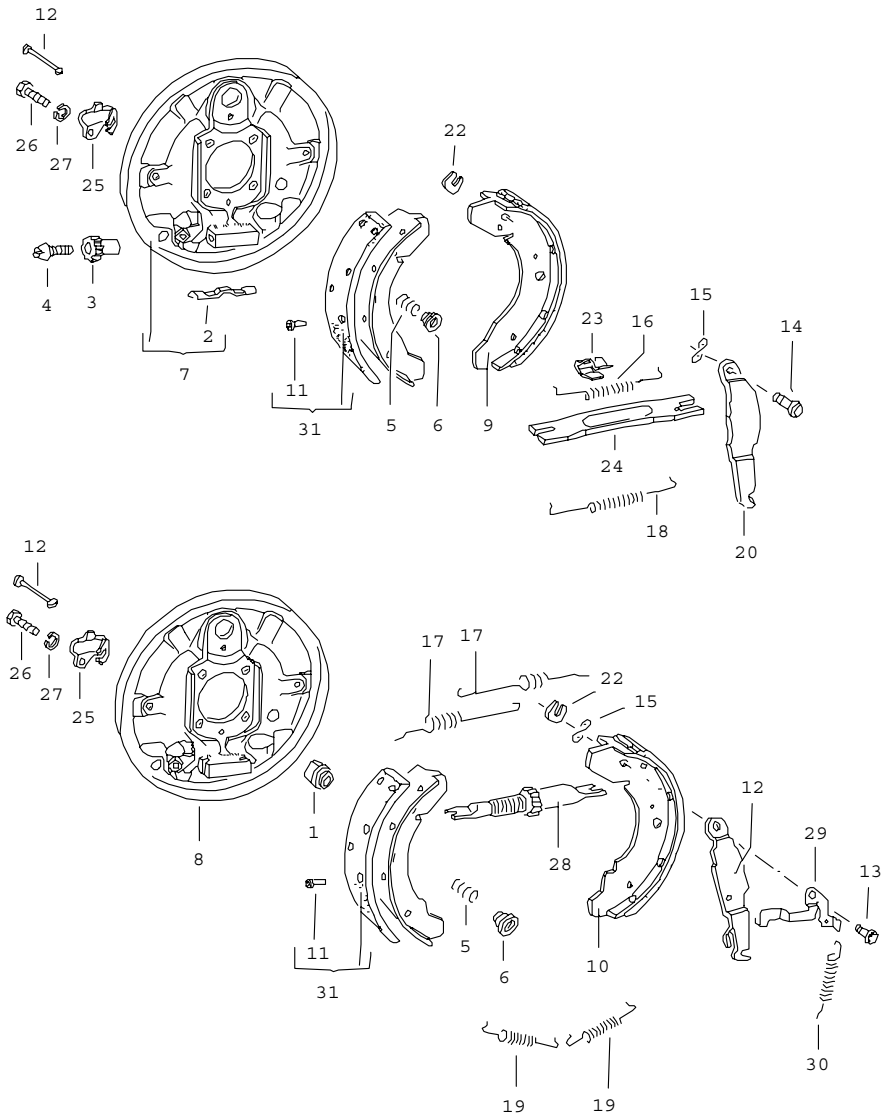

Pos	Part Number	Name	Remarks	Qty	Model
		brake rear axle			924
1	113 609 163	plug		8	
2	211 609 185 A	leaf spring for adjusting nut		2	
3	113 609 205 A	adjusting nut		4	
4	131 609 209	adjusting screw		4	
5	251 609 283	spring		4	
6	251 609 289	concave washer		4	
7	E 113 609 439 E	calliper carrier	/L	1	
(7)	113 609 440 E	calliper carrier	/R	1	
8	E 481 609 439 A	calliper carrier	/L	1	(S)
(8)	E 481 609 440 A	calliper carrier	/R	1	(S)
9	477 609 537 D	brake shoe 40 with pad		4	
10	477 609 537 E	brake shoe 40 with pad		4	(S)
11	N 013 633 1	rivet C 4 X 7,5		36	
12	171 609 579 B	roll pin 37		4	
13	113 609 601 A	pin for lever		2	(S)
14	211 609 601 B	pin for lever		2	
15	N 012 228 3	spring washer B 8		2	
16	E 113 609 605 A	return spring upper		2	
17	113 609 605 D	return spring upper		4	(S)
18	113 609 309 B	return spring lower		2	

Pos	Part Number	Name	Remarks	Qty	Model
19	311 609 609	return spring lower		4	(S)
20	E 113 609 613 A	lever	/L	1	
(20)	E 113 609 614 A	lever	/R	1	
21	113 609 613 C	lever	/L	1	(S)
(21)	113 609 614 C	lever	/R	1	(S)
22	211 609 619	safety clip for pin		2	
23	113 609 625	clamp for push rod		2	
24	E 113 609 631 A	push rod		2	
25	E 113 609 637	support for parking-brake cable	/L	1	
(25)	E 113 609 638	support for parking-brake cable	/R	1	
26	900 075 087 02	hexagon-head bolt M 8 X 16		2	
27	900 027 015 02	lock ring B 8		2	
28	113 609 801 A	push rod	/L	1	(S)
(28)	113 609 802 A	push rod	/R	1	(S)
29	E 113 609 853	adjusting lever	/L	1	(S)
(29)	113 609 854	adjusting lever	/R	1	(S)
30	113 609 859	spring for adjusting lever		2	(S)
31	477 698 075 A	set of brake pads -ENERGIT- without asbestos		1	
(31)	477 698 076 A	set of brake pads -ENERGIT- without asbestos oversize 0,50 mm		1	

Pos	Part Number	Name	Remarks	Qty	Model
		brake drum see group 5/01/05			
		- -- E N D -- -			

Model	Year	MG	SG	Illustration	Restrictions	Update	12:39	06.04.2005	PORSCHE PET PORSCHE
924	85	6	03	603-05		187			

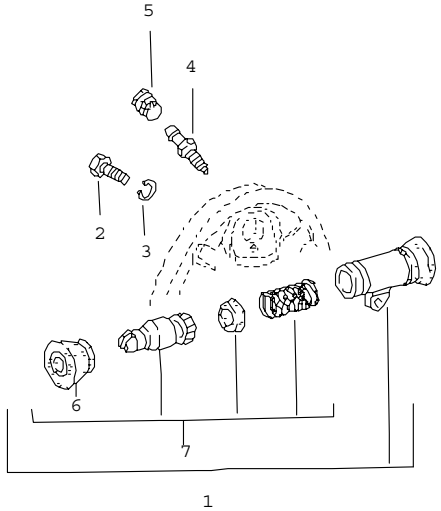

Pos	Part Number	Name	Remarks	Qty	Model
		wheel brake cylinder rear axle			924
1	477 611 055 E	wheel brake cylinder 19,05		2	
2	900 075 087 02	hexagon-head bolt M 8 X 16		2	
3	900 027 015 02	lock ring B 8		2	
4	211 611 477 A	bleeder valve		2	
5	211 611 483	dust boot		2	
6	* 113 611 695 D	protection cap		2	
7	* 477 698 051	repair kit wheel brake cylinder 19,05		2	
		- -- E N D -- -			

Model	Year	MG	SG	Illustration	Restrictions	Update	12:39	06.04.2005	PORSCHE PET PORSCHE
924	85	6	03	603-10		187			

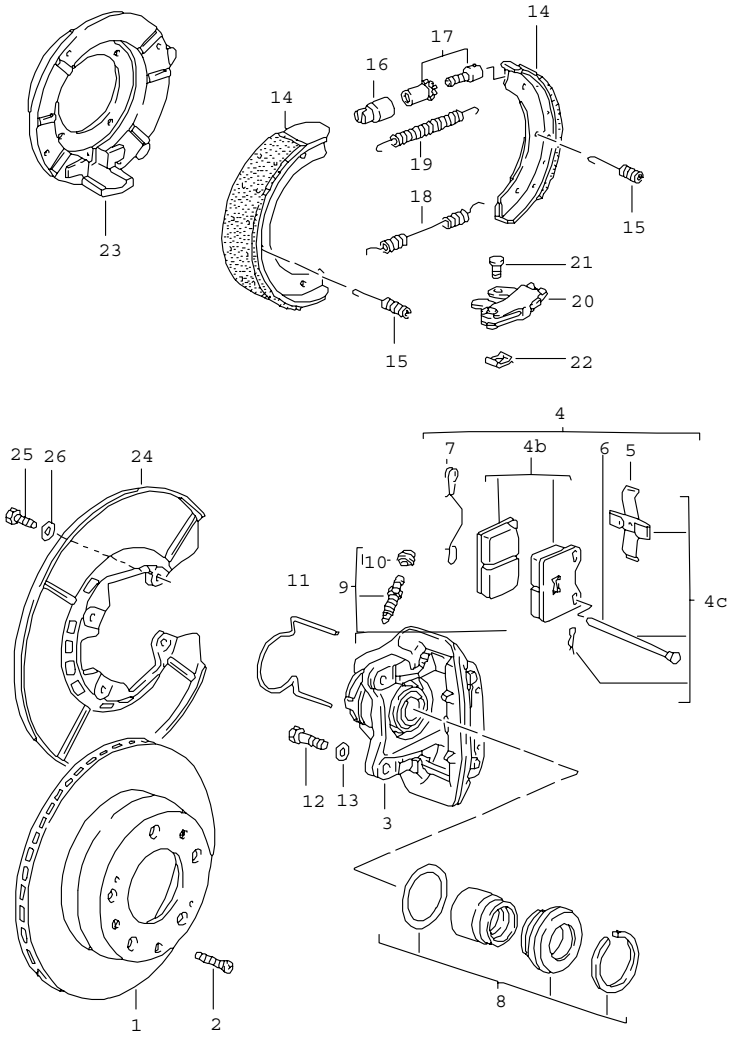

Pos	Part Number	Name	Remarks	Qty	Model
		disc brake rear axle			924,M 471 TURBO,GT
1	944 352 041 02	brake disc		2	
2	N 033 167 1	countersunk-head screw M 6 X 12		2	
3	944 352 429 00	floating calliper without pad	/L	1	
(3)	944 352 430 00	floating calliper without pad	/R	1	
4	A 944 352 951 00	set of brake pads		1	
4B	944 352 951 02	set of brake pads		1	
4B	944 352 951 02	set of brake pads		1	M 475
4C	944 352 952 00	mounting parts		1	
5	* 928 352 935 00	expanding spring		2	
6	* 928 351 936 00	retaining pin		4	
7	E 928 352 937 00	retaining spring		2	
8	* 928 352 941 00	set of seals		2	
9	901 352 977 10	ventilation valve		2	
10	901 351 927 10	dust boot		2	
11	944 352 953 00	guide spring	/L	1	
(11)	E 944 352 954 00	guide spring	/R	1	
12	900 082 077 02	hexagon-head bolt M 12 X 1,5 X 37		4	
13	N 012 232 1	spring washer		4	
		handbrake			
14	996 352 993 00	repair kit without asbestos		4	
15	928 352 957 02	compression spring		4	
16	911 352 944 00	bush		2	
17	911 352 098 00	adjusting screw		2	
18	901 352 954 10	return spring		2	
19	901 352 932 10	return spring		2	

Pos	Part Number	Name	Remarks	Qty	Model
20	951 352 090 00	expanding bow		2	
21	477 609 459	bolt		2	
22	N 900 588 01	lock		2	
23	477 609 111	calliper carrier	/L	1	
(23)	E 477 609 112	calliper carrier	/R	1	
24	937 352 801 00	protective plate		2	
25	N 010 210 13	hexagon-head bolt M 6 X 10	-81	8	
(25)	999 072 005 09	hexagon-head bolt M 6 X 12	82-	8	
26	N 012 226 5	spring washer B 8		8	
		- -- E N D -- -			

Pos	Part Number	Name	Remarks	Qty	Model

Model	Year	MG	SG	Illustration	Restrictions	Update	12:39	06.04.2005	PORSCHE PET PORSCHE
924	85	6	04	604-00		187			

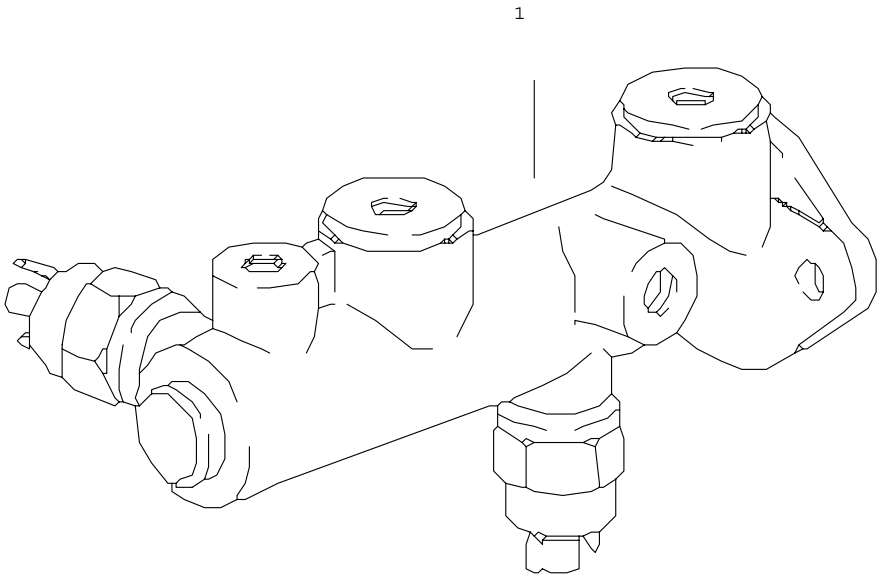

Pos	Part Number	Name	Remarks	Qty	Model
		brake master cylinder			
1	477 611 017	brake master cylinder with stop light switch	80	1	924,TURBO
(1)	477 611 017 A	brake master cylinder	81-	1	924,TURBO
(1)	944 355 011 01	brake master cylinder		1	GT
-	* 928 355 913 00	repair kit brake master cylinder	80	1	924,TURBO
-	944 355 911 01	repair kit brake master cylinder		1	GT
		stop light switch see group 9/06/00			
		- -- E N D -- -			

Model	Year	MG	SG	Illustration	Restrictions	Update	12:39	06.04.2005	PORSCHE	PET	PORSCHE
924	85	6	04	604-05		187					

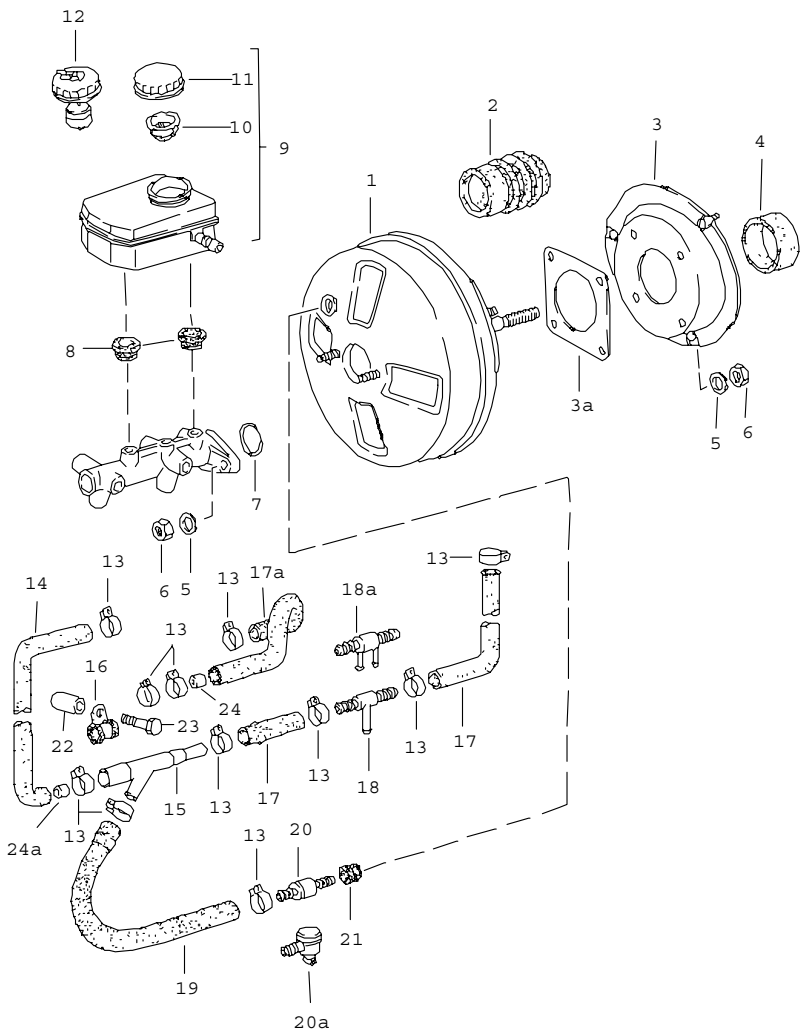

Pos	Part Number	Name	Remarks	Qty	Model
		brake booster expansion tank			
1	477 612 107 G	brake booster		1	924
(1)	477 612 107 F	brake booster		1	924,M 471 TURBO,GT
2	477 611 115	bellows		1	
3	477 611 945 D	intermediate piece		1	
3A	477 611 951	gasket		1	
(4)	477 611 969 D	gasket		1	
5	900 025 007 02	washer		9	
6	900 076 025 02	hexagon nut M 8		9	
7	251 611 243	sealing ring		1	
8	W 211 611 817 A	plug		2	
8	911 355 922 00	plug		2	
9	477 611 303	expansion tank	-80	1	
(9)	477 611 303 B	expansion tank	-80	1	M 592
(9)	477 611 303 B	expansion tank	81-	1	
10	E 477 611 381	strainer	-80	1	
(10)	477 611 385 A	bush	-80	1	M 592
(10)	477 611 385 A	bush	81-	1	
11	477 611 361	cover	-80	1	
12	477 611 351 B	cover with float	-80	1	M 592
12	477 611 351 B	cover with float	81-	1	
13	N 024 510 1	hose clamp		9	
14	477 612 147 A	vacuum hose it is necessary to rework	80- 82-	1	TURBO,GT
15	035 133 753 A	venturi tube		1	
16	N 020 607 1	clamp		1	
-	999 181 022 51	hose		*	TURBO,GT

Pos	Part Number	Name	Remarks	Qty	Model
17	-	400 MM		1	
17A	477 612 153 A	hose		1	924
18	321 611 813	t-socket		1	
19	477 612 149	elbow		1	TURBO,GT
(19)	477 612 155	elbow		1	924
(20)	431 611 933	check valve		1	TURBO,GT
20A	191 611 933 F	check valve		1	924
(20A)	477 611 933 A	check valve	82-	1	M 573
21	911 355 921 00	rubber seal		1	
22	931 107 143 00	spacer sleeve	-80	1	TURBO
23	900 074 040 02	hexagon-head bolt M 8 X 50	-80	1	TURBO
24	928 355 515 00	nozzle	-81	1	924
24A	928 355 515 01	nozzle	82-	1	924
		- -- E N D -- -			

Pos	Part Number	Name	Remarks	Qty	Model

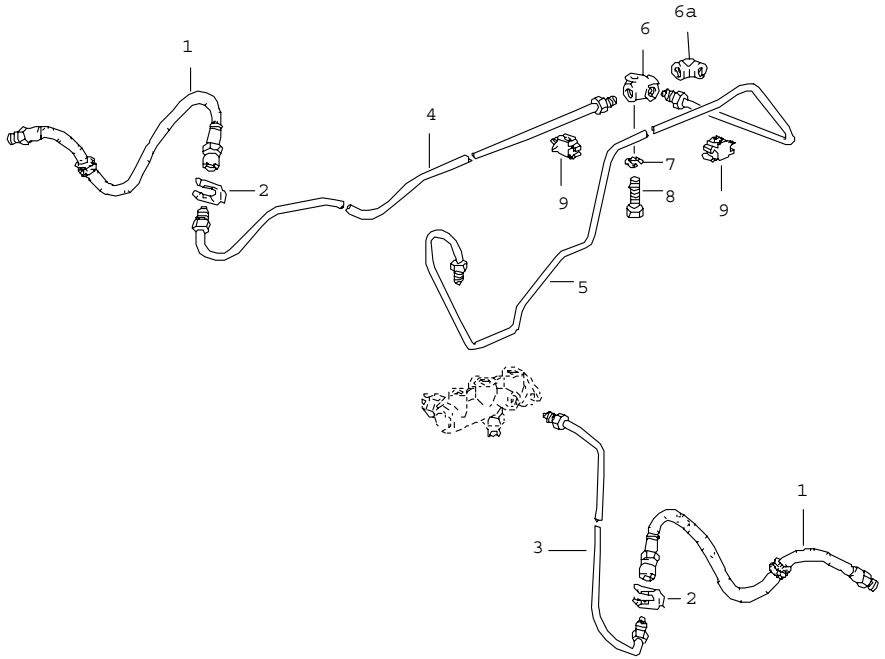

Pos	Part Number	Name	Remarks	Qty	Model
		brake lines front			
1	477 611 071 A	brake hose		2	924
(1)	477 611 071 B	brake hose		2	924,M 471 TURBO,GT
2	113 611 715 A	brake hose bracket		2	
3	477 611 723 A	brake line	/L	1	924,TURBO
(3)	944 355 029 01	brake line	/L	1	GT
4	477 611 724 A	brake line	/R	1	
5	477 611 739 B	brake line		1	924,TURBO
(5)	937 355 630 00	brake line		1	GT
6	113 611 755	distributing piece		1	924,TURBO
6A	901 355 615 00	angled pipe		1	GT
7	N 012 226 5	spring washer B 8		1	924,TURBO
8	900 075 016 02	hexagon-head bolt M 6 X 22		1	924,TURBO
9	477 611 767 B	cable clip	-9.81	7	
9	811 611 797	clip	10.81-	7	
		- -- E N D -- -			

Model	Year	MG	SG	Illustration	Restrictions	Update	12:40	06.04.2005	PORSCHE	PET	PORSCHE
924	85	6	04	604-15		187					

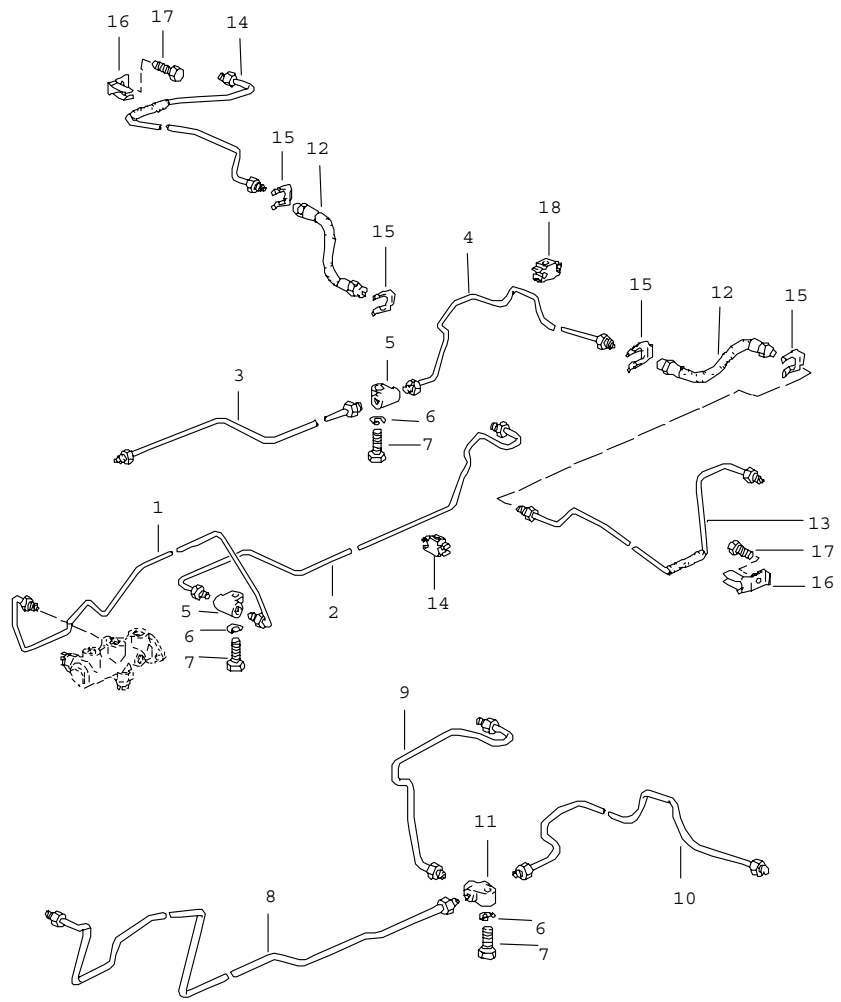

Pos	Part Number	Name	Remarks	Qty	Model
		brake lines rear			
1	477 611 744 B	brake line	/R	1	924,TURBO
2	477 611 746 B	brake line	/R	1	924,TURBO
3	477 611 741 B	brake line	/L	1	924,TURBO
4	477 611 745 A	brake line	/L	1	924,TURBO
5	113 611 791	connecting piece		2	924,TURBO
6	N 012 226 5	spring washer B 6		3	
7	900 075 016 02	hexagon-head bolt M 6 X 22		3	
8	937 355 631 00	brake line		1	GT
9	937 355 632 00	brake line	/R	1	GT
10	944 355 033 00	brake line	/L	1	GT
11	113 611 755	distributing piece		1	GT
12	477 611 775	brake hose		2	
13	477 611 781	brake line	/L	1	924
(13)	E 477 611 781 A	brake line	/L	1	924,M 471 TURBO,GT
14	E 477 611 782	brake line	/R	1	924
(14)	477 611 782 A	brake line	/R	1	924,M 471 TURBO,GT
15	113 611 715 A	hose holder		4	
16	477 611 783	support		2	924,M 471 TURBO,GT
17	N 010 210 13	hexagon-head bolt M 6 X 10		2	
18	477 611 767 B	cable clip	-9. 81	9	
(18)	811 611 797	clip	10.81-	9	
		- -- E N D -- -			

Model	Year	MG	SG	Illustration	Restrictions	Update		
924	85	6	98	REP		187	9:44	12.04.2005

Pos	Part Number	Name	Remarks	Qty	Model
		repair kits			
>>	> 477 698 151 A	set of brake pads for floating calliper comprising: brake pad	/V -80	1 4	924 TURBO,M 472
-	803 615 269 C	expanding spring		2	
-	803 615 261 B	retaining pin		4	
>>	> 928 352 951 02	set of brake pads comprising: brake pad	/V -80	1 4	924 TURBO,M 472
>>	> 477 698 163	parts set comprising: expanding spring retaining pin	/V -80	1 2 4	924 TURBO,M 472
>>	> 803 698 471 C	set of seals for floating calliper comprising: sealing ring circlip slide protection cap	/V -80	2 1 1 2 1	924 TURBO,M 472
>>	> 477 698 075 A	set of brake pads - jurid - comprising: brake pad	/H	1 4	
-	N 013 633 1	rivet C 4 X 7,5		45	
>>	> 477 698 075 A	set of brake pads - energit - without asbestos comprising: brake pad	/H	1 4	
-	N 013 633 1	rivet C 4 X 7,5		45	
>>	> 477 698 076 A	set of brake pads - jurid - oversize 0,50 mm comprising: brake pad	/H	1 4	
-	N 013 633 1	rivet C 4 X 7,5		45	

Model	Year	MG	SG	Illustration	Restrictions	Update		
924	85	6	98	REP		187	9:44	12.04.2005

Pos	Part Number	Name	Remarks	Qty	Model
>>	> 477 698 076 A	set of brake pads - energit - without asbestos oversize 0,50 mm comprising: brake pad	/H	1 4	
-	N 013 633 1	rivet C 4 X 7,5		45	
>>	> 477 698 051	repair kit for wheel brake cylinder 19.05 comprising: spring filler piece boot piston	/H -80	2 1 2 2 2	924 TURBO,M 472
-	113 611 695 D	protection cap		2	
>>	> 477 698 155	set of brake pads (JURID 209-380) comprising: brake pad	/V	1 4	TURBO 924,M 471
-	928 351 935 00	expanding spring		2	
-	928 351 936 00	retaining pin		4	
-	477 615 112	retaining spring		2	
>>	> 944 351 951 02	set of brake pads comprising: brake pad	/V	1 4	TURBO,GT 924,M 471
>>	> 944 351 951 02	set of brake pads comprising: brake pad	/V	1 4	M 475,TURBO GT,924 M 471
>>	> 944 351 952 01	mounting parts comprising: expanding spring retaining pin retaining spring safety seal	/V	1 2 4 2 2	TURBO,GT 924,M 471
>>	> 928 351 941 00	set of seals for floating calliper comprising: gasket protection cap circlip	/V	2 1 1 1	TURBO 924,M 471
>>	> 477 698 157	set of brake pads (JURID 231) comprising: brake pad	/H	1 4	TURBO 924,M 471

Model	Year	MG	SG	Illustration	Restrictions	Update		
924	85	6	98	REP		187	9:44	12.04.2005

Pos	Part Number	Name	Remarks	Qty	Model
-	928 352 935 00	expanding spring		2	
-	928 351 936 00	retaining pin		4	
-	E 928 352 937 00	retaining spring		2	
>>	> 944 352 951 02	set of brake pads comprising: brake pad	/H	1 4	TURBO,GT 924,M 471
>>	> 944 352 951 02	set of brake pads comprising: brake pad	/H	1 4	M 475,TURBO GT,924,M 471
>>	> 944 352 952 00	mounting parts comprising: expanding spring retaining pin retaining spring safety seal	/H	1 2 4 2 4	TURBO,GT 924,M 471
>>	> 928 352 941 00	set of seals for floating calliper comprising: gasket protection cap circlip slide	/H	2 1 1 1 2	TURBO 924,M 471
>>	> 928 355 913 00	repair kit for brake master cylinder 23,81 MM	80	1	924,TURBO
>>	> 937 355 913 00	repair kit for brake master cylinder 23,81 MM/19,05 MM		1	GT

- -- E N D -- -

Model	Year	MG	SG	Illustration	Restrictions	Update	12:40	06.04.2005	PORSCHE PET PORSCHE
924	85	7	01	701-00		187			

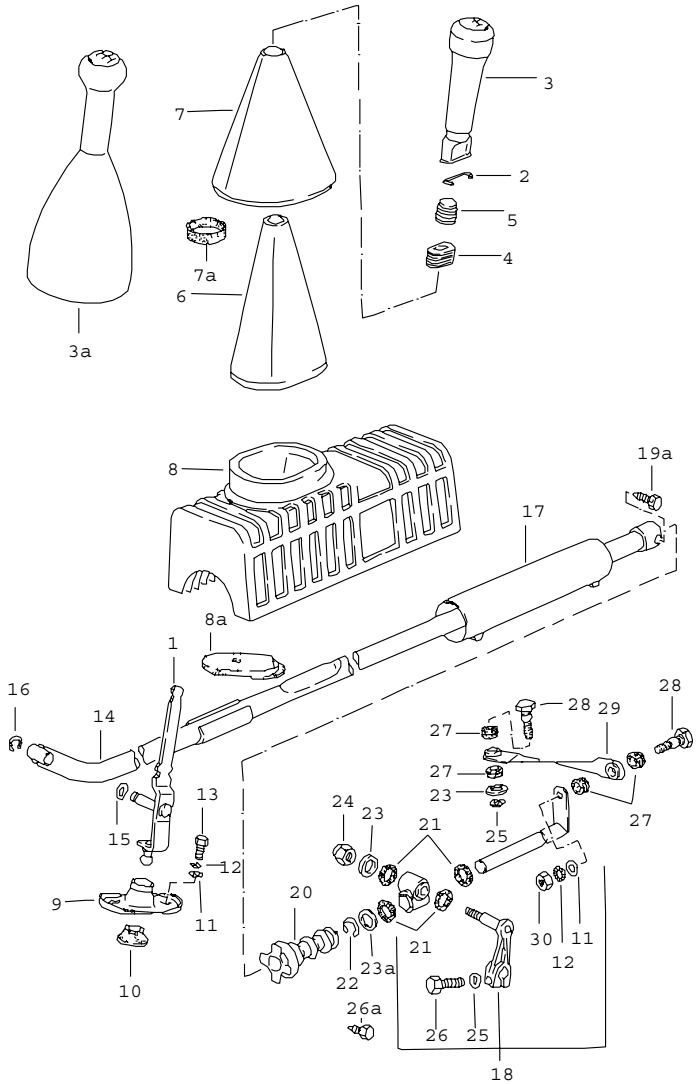

Pos	Part Number	Name	Remarks	Qty	Model
		shift mechanism manual transmission			016.8/9/G
1	477 711 205 D	gearshift lever		1	
2	477 711 269	retainer spring		1	
3	477 711 289 A	gearshift knob leatherette		1	016.8/9
	01C	black			
3A	931 424 075 00	gearshift knob with boot leather	81-	1	
	1AJ	black			
	3NG	brown			
4	477 711 219	vibration damper		1	016.8/9
(4)	931 424 111 00	vibration damper	81-	1	
5	477 711 217	vibration damper		1	016.8/9
(5)	931 424 110 00	vibration damper	81-	1	
6	477 711 270 B	inner sleeve		1	
7	477 711 252 C	boot		1	016.8/9
(7)	477 711 252 B	boot leather	-80	1	016.8/9
	1AJ	black			
	3NG	brown			
7A	477 711 257	rubber ring		1	
8	477 711 239	sound absorber		1	
(8)	477 711 239	sound absorber	81	1	
8A	477 711 270 B	inner sleeve	81	1	
9	944 424 229 00	bearing bracket		1	
10	944 424 231 01	bearing shell		1	
11	N 011 525 13	washer A 8,4		3	
12	N 012 108 2	serrated lock washer 8,4		3	

Pos	Part Number	Name	Remarks	Qty	Model
13	N 010 237 6	hexagon-head bolt M 8 X 12		2	
14	944 424 019 00	gear shift rod		1	
15	900 028 005 02	spring washer A 10		1	
16	N 012 437 1	lock washer		1	
17	477 711 285	protective tube		1	
18	477 711 103 C	intermediate shift lever	-80	1	016.8/9
(18)	477 711 103 D	intermediate shift lever	81-	1	
19	823 711 833	hexagon-head bolt		1	
20	477 711 159 B	bellows		1	
21	477 711 149	sealing ring		4	
22	N 012 415 1	circlip 15 X 1		1	
23	311 827 181	washer		2	
23A	477 711 139 A	washer		1	
24	803 253 111	lock nut M 8		1	
25	N 012 241 11	spring washer B 8 X 15		2	
26	N 010 233 6	hexagon-head bolt M 8 X 28	-80	1	016.8/9
26A	443 711 189 A	hexagon-head bolt	81-	1	
27	477 711 155 A	sealing ring		4	
28	477 711 147 A	ball pin		2	
29	944 424 141 00	joint rod		1	
30	N 011 008 8	hexagon nut M 8		1	
		- -- E N D -- -			

Pos	Part Number	Name	Remarks	Qty	Model

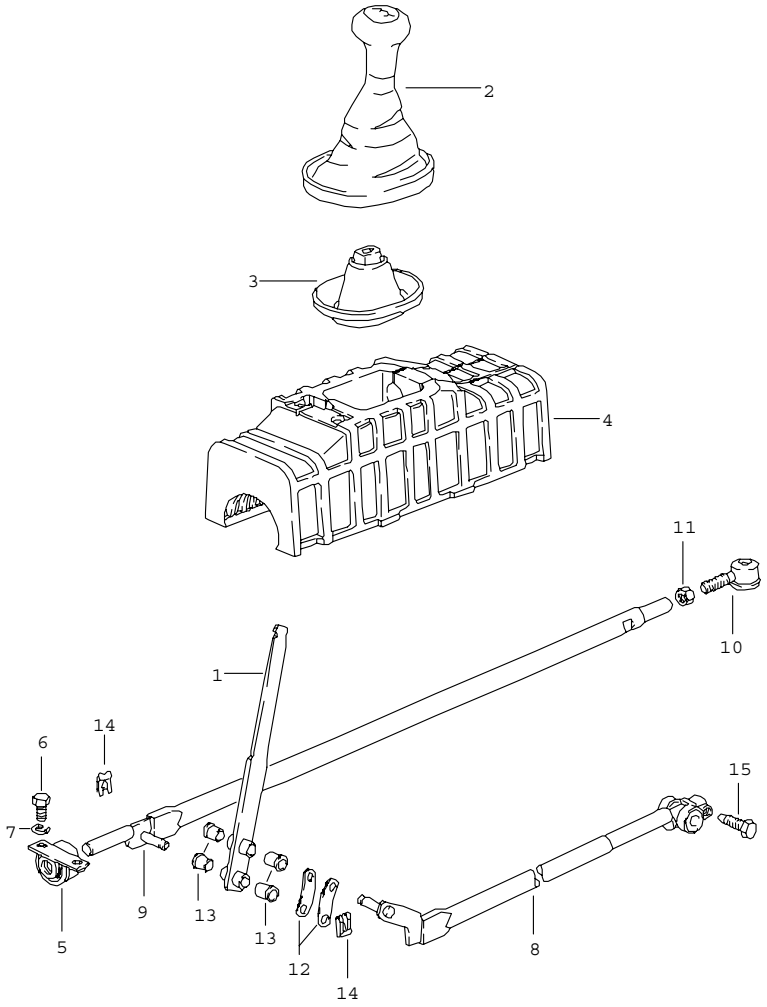

Pos	Part Number	Name	Remarks	Qty	Model
		shift mechanism manual transmission			G31.01/02/03
1	477 711 206 B	gearshift lever		1	
2	928 424 073 01	gearshift knob with boot		1	
	1AJ	black			
	3NG	brown			
3	477 711 270	inner sleeve		1	
4	E 477 711 240	insulation		1	
5	477 711 237 A	bearing bracket		1	
6	N 010 210 13	hexagon-head bolt M 6 X 10		2	
7	N 012 226 5	spring washer A 6		2	
8	477 711 106	gear shift rod		1	
9	477 711 154	guiding rod		1	
10	477 711 176 A	angular joint		1	
11	900 034 003 02	hexagon nut BM 10		1	
12	477 711 216	leaf spring		2	
13	999 924 002 40	plain bearing		4	
14	999 166 034 02	sl-lock		2	
15	901 424 229 00	conical screw		1	
		- -- E N D -- -			

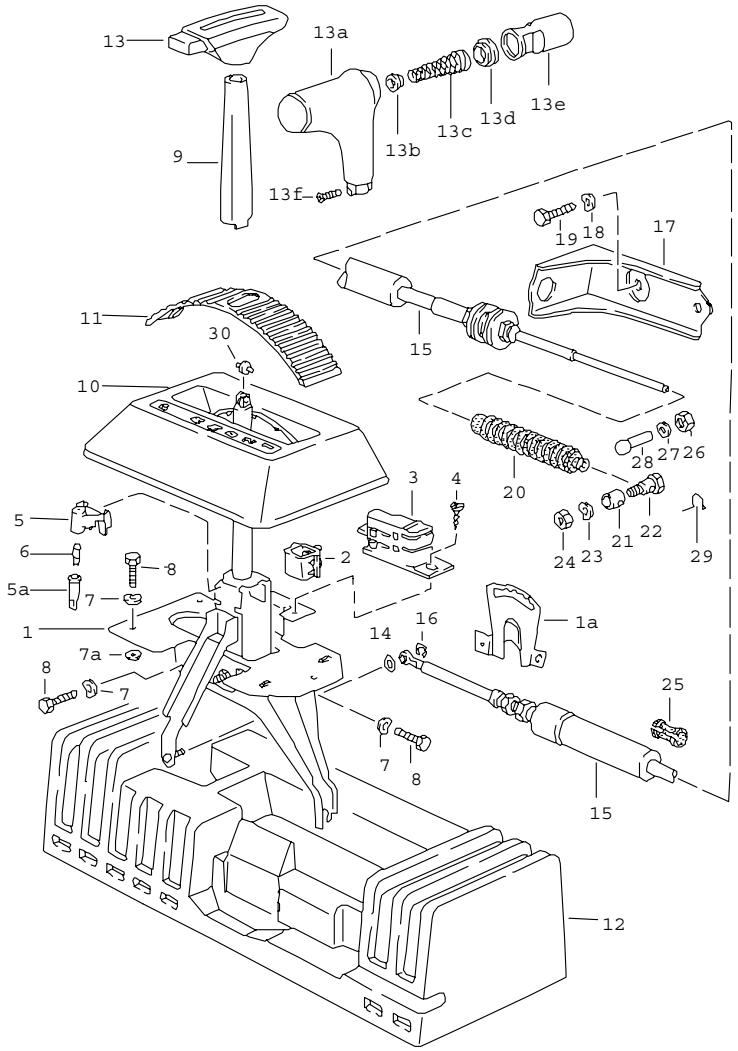

Pos	Part Number	Name	Remarks	Qty	Model
		shift mechanism automatic transmission			
1	477 713 025 A	shift mechanism	-82	1	
(1)	944 426 025 02	gearshift bracket	83-	1	
1A	944 426 109 01	locking segment		1	
2	171 927 145 A	contacts		1	
3	311 927 147 B	support for contact		1	
4	N 013 968 1	tapping screw B 4,8 X 13		2	
5	321 713 855 A	bulb holder		1	
5A	111 919 243	bulb holder		1	
6	900 631 129 90	bulb		1	
7	N 012 226 5	spring washer B 6		5	
7A	N 900 067 01	washer 6,4		3	
8	N 010 215 13	hexagon-head bolt M 6 X 15		2	
8A	N 010 217 9	hexagon-head bolt M 6 X 20		3	
9	477 713 279	cover	-82	1	
(9)	944 426 279 00	cover	83-	1	
	01C	black			
	89S	brown			
10	477 713 111	cover		1	
	01C	black			
	89S	cadbury brown			
11	477 713 277	cover strip		1	
12	A 477 713 115	sound absorber use		1	
(12)	944 426 182 01	sound absorber it is necessary to rework		1	
(12)	944 426 181 00	sound absorber it is necessary to rework		1	

Pos	Part Number	Name	Remarks	Qty	Model
13	171 713 139	selector knob	-82	1	
	GH1	black			
13A	928 426 077 00	selector knob	83-	1	
	1AJ	black			
	4RB	brown			
13B	922 424 203 00	concave washer	83-	1	
13C	922 424 176 03	compression spring	83-	1	
13D	922 424 201 00	concave washer	83-	1	
13E	928 426 174 01	adjusting lever	83-	1	
13F	N 033 165 1	countersunk-head screw M 4 X 8		2	
14	E 473 867 471	sealing ring		1	
15	477 713 265 A	cable	-80	1	
(15)	477 713 265 C	cable	81-	1	
16	N 012 325 1	lock washer		1	
17	477 713 281 A	retaining bracket		1	
18	N 012 038 1	lock ring B 8		2	
19	N 010 240 16	hexagon-head bolt M 8 X 20		2	
20	311 713 269 A	sealing sleeve	-80	1	
(20)	477 609 715	sealing sleeve	81-	1	
21	311 713 291 A	clamping bush	-80	1	
22	E 311 713 293	clamping bolt	-80	1	
23	N 012 241 11	spring washer B 8 X 15	-80	1	
24	N 011 118 14	hexagon nut M 8	-80	1	
25	431 609 781	protective tube		2	
26	N 011 005 14	hexagon nut M 5	81-	1	
27	900 151 027 02	washer B 5,3	81-	1	
28	911 423 147 00	ball socket	81-	1	
29	900 169 014 02	securing clip	81-	1	
30	321 713 137	roller		1	
		- -- E N D -- -			

Model	Year	MG	SG	Illustration	Restrictions	Update	12:41	06.04.2005	PORSCHE PET PORSCHE
924	85	7	01	701-15		187			

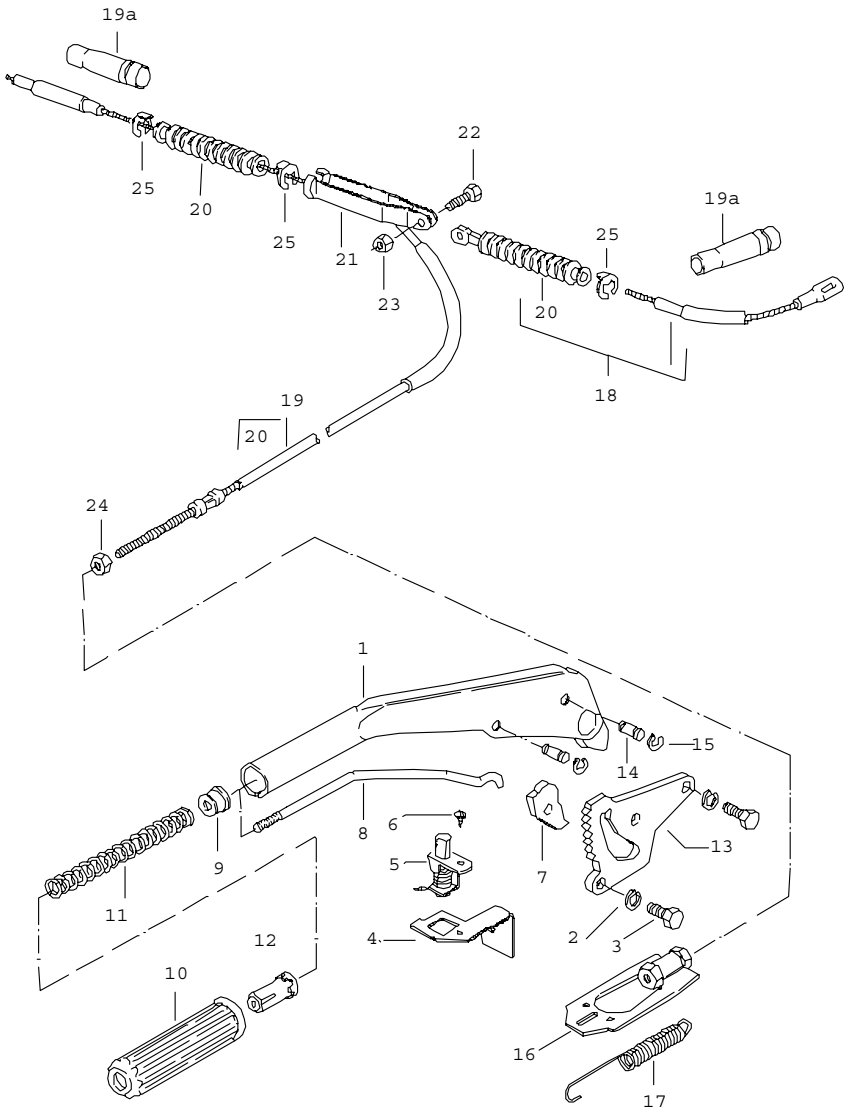

Pos	Part Number	Name	Remarks	Qty	Model
		parking-brake lever			
1	477 711 305 B	parking-brake lever		1	924
(1)	477 711 305 B	parking-brake lever	84-	1	924
(1)	477 711 305 A	parking-brake lever	-83	1	924,M 471 TURBO,GT
(1)	E 944 424 052 00	parking-brake lever	84-	1	TURBO
2	900 027 015 02	lock ring B 8		2	
3	N 010 239 11	hexagon-head bolt M 8 X 18		2	
4	477 711 317	support	/LL	1	
(4)	E 478 711 318	support	/RL	1	
5	968 613 601 00	contact switch		1	
6	N 013 957 5	tapping screw B 3,5 X 9,5		1	
7	823 711 321	pawl		1	
8	481 711 325	rod		1	
9	481 711 327	spring sleeve		1	
10	839 711 327	grip		1	
	01C	black			
11	191 711 329	spring		1	
12	113 711 333 B	push button		1	
13	477 711 339 B	tooth sector		1	
13	944 424 252 00	tooth sector		1	924,M 471 TURBO,GT
14	251 711 341 A	pin		2	
15	N 012 437 1	lock washer		4	
-	944 424 352 00	pin	84-	1	
-	900 910 022 09	lock nut M8	84-	1	
16	477 711 973	connecting piece		1	
17	477 711 975	return spring		1	

Pos	Part Number	Name	Remarks	Qty	Model
18	477 609 719	parking-brake cable 995 MM	-80	1	924 TURBO,M 472
19	477 609 720	parking-brake cable 2035 MM	-80	1	924 TURBO,M 472
18	477 609 719 C	parking-brake cable 925 MM		1	924,M 471 TURBO,GT
(19)	477 609 720 C	parking-brake cable 1975 MM		1	924,M 471 TURBO,GT
19A	477 609 723	guide tube		2	924,M 471 TURBO,GT
20	477 609 715	sealing sleeve		2	
-	N 020 906 3	tie-wrap 6,5 X 450		2	
21	477 711 965	compensating bow		1	
22	N 010 217 4	hexagon-head bolt M 6 X 20		1	
23	900 910 012 02	lock nut M 6		1	
24	900 076 010 02	hexagon nut M 6		1	
25	N 012 328 1	lock		3	
26	999 513 025 40	tie-wrap for parking-brake cable rear-axle cross-tube		2	
		- -- E N D -- -			

Model	Year	MG	SG	Illustration	Restrictions	Update	12:41	06.04.2005	PORSCHE PET PORSCHE
924	85	7	02	702-00		187			

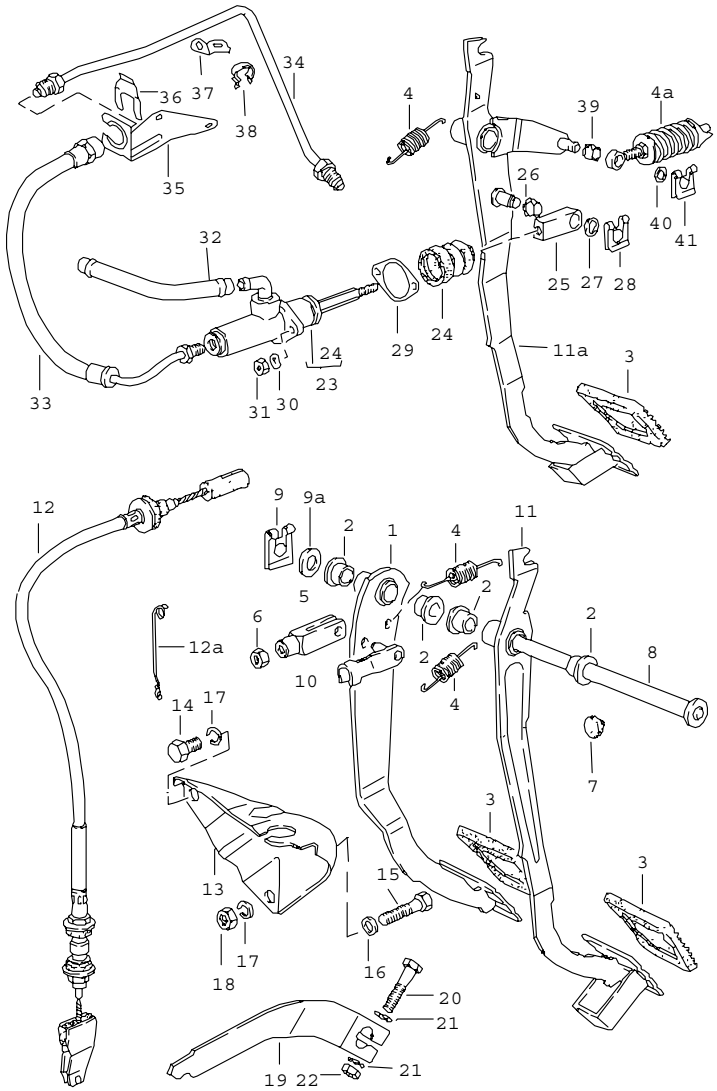

Pos	Part Number	Name	Remarks	Qty	Model
		brake clutch pedals left-hand drive			
1	477 721 141	brake pedal		1	
(1)	477 723 141	brake pedal		1	924,AUT.
2	443 721 153 A	bearing sleeve		4	
3	823 721 173	cap		2	
(3)	827 723 173	cap		1	924,AUT.
4	321 721 191	return spring		2	
4A	477 721 353 A	clutch power spring		1	TURBO,GT
5	803 721 213	clevis		1	
6	N 011 010 6	hexagon nut M 10		1	
7	999 703 183 40	buffer		1	
8	843 721 309	bolt 12 X 185 X 180		1	
(8)	N 023 151 2	bolt 12 X 144 X 139		1	924,AUT.
9	N 012 653 1	lock		1	
9A	311 955 255	washer		1	
10	N 023 476 1	bolt 8 X 32		1	
11	477 721 315 A	clutch pedal		1	924
11A	477 721 315 D	clutch pedal		1	TURBO,GT
12	477 721 333 B	clutch cable		1	924
12A	477 721 391	retainer spring		1	924
13	477 721 399 A	support		1	924
14	N 034 879 4	hexagon-head bolt M 12 X 22		1	924
15	N 010 476 3	screw M 12 X 75		1	924
16	N 011 531 7	washer 13		1	924

Pos	Part Number	Name	Remarks	Qty	Model
17	N 012 042 4	lock ring B 12		2	924
18	N 011 030 4	hexagon nut M 12		1	924
19	019 141 719	clutch release lever		1	924
20	N 040 262 2	hexagon-head bolt M 8 X 50		1	924
21	N 015 401 4	washer 8,4		2	924
22	N 011 008 8	hexagon nut M 8		1	924
		clutch control hydraulic			TURBO, GT
23	477 721 171	clutch master cylinder complete		1	
24	928 423 908 00	bellows		1	
25	928 423 517 00	clevis		1	
26	999 924 002 40	bush		1	
27	900 025 008 09	washer A 10,5		1	
28	999 166 034 02	sl-lock		1	
29	928 423 191 00	gasket		1	
30	900 027 015 02	lock ring B 8		2	
31	900 076 025 02	hexagon nut M 8		3	
-	999 181 021 50	hose 12,5 X 7,5		*	
32	-	220 MM		1	
(33)	477 721 189 A	clutch hose		1	
34	477 721 185	clutch pipeline		1	
35	477 721 191	support clutch hose		1	
36	928 423 183 01	hose holder		1	
37	477 721 195	retaining bracket		1	
38	181 971 847	cable clip		1	
39	999 924 001 40	bush		1	
40	N 011 525 13	washer A 8,4		1	
41	N 900 470 01	lock washer		1	
		- -- E N D -- -			

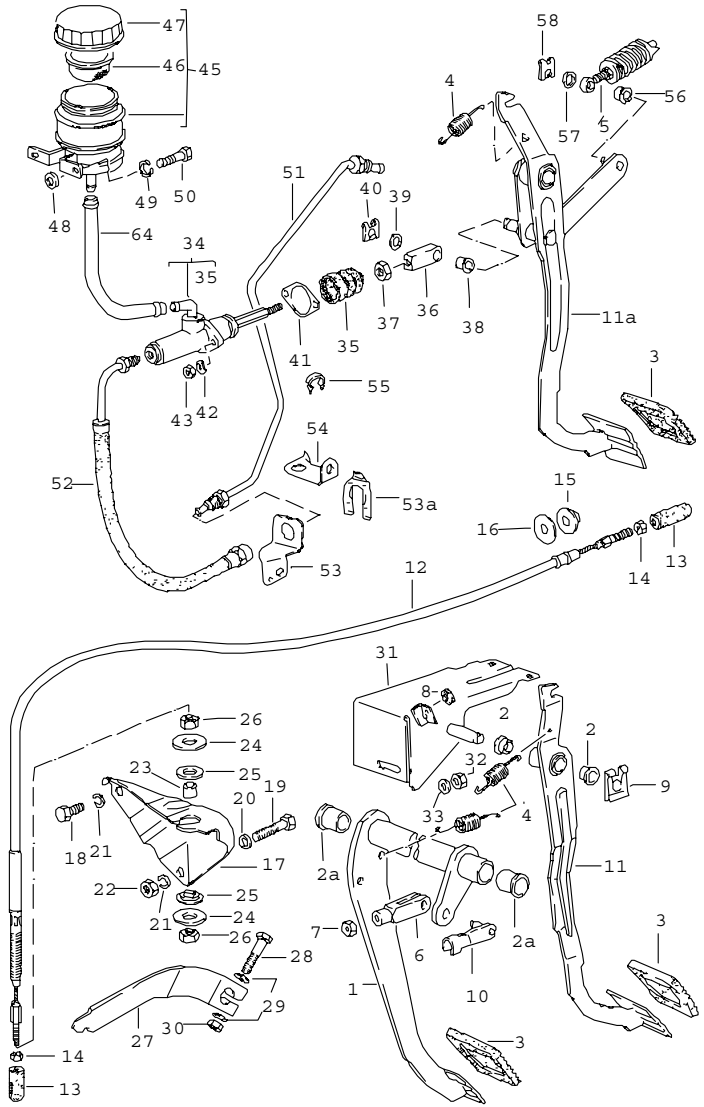

Pos	Part Number	Name	Remarks	Qty	Model
		brake clutch pedals right-hand drive			
1	E 478 721 141	brake pedal		1	
(1)	478 723 141	brake pedal		1	AUT.
2	443 721 153 A	bearing sleeve		2	924
2A	478 721 153	bearing sleeve		2	
3	823 721 173	cap		2	
(3)	827 723 173	cap		1	924,AUT.
4	321 721 191	return spring		2	
5	477 721 353 A	clutch power spring		1	TURBO,GT
6	803 721 213	clevis		1	924
7	N 011 010 6	hexagon nut M 10		1	924
8	999 703 183 40	buffer		1	
9	N 012 653 1	lock		1	
10	N 023 476 1	bolt 8 X 32		1	
11	478 721 315	clutch pedal		1	924
11A	478 721 315 A	clutch pedal		1	TURBO,GT
12	478 721 335 A	clutch cable	-81	1	924
(12)	478 721 333 B	clutch cable	81-	1	924
13	E 803 721 339	threaded eye	-81	2	924
14	900 076 010 02	hexagon nut M 6	-81	2	924
15	803 721 393	bush	-81	1	924
16	803 721 397	washer 10,4 X 38 X 25	-81	1	924
17	477 721 399 A	support		1	924
18	N 034 879 4	hexagon-head bolt M 12 X 22		1	924 924
19	N 010 476 3	screw M 12 X 75		1	924 924

Pos	Part Number	Name	Remarks	Qty	Model
20	N 011 531 7	washer 13		1	924
21	N 012 042 4	lock ring B 12		2	924
22	N 011 030 4	hexagon nut M 12		1	924
23	803 721 341	spacer tube	-81	1	924
24	803 721 369	washer	-81	2	924
25	803 721 389	bush	-81	2	924
26	N 021 281 1	lock nut M 12 X 1	-81	2	924
27	019 141 719	clutch release lever		1	924
28	N 040 262 2	hexagon-head bolt M 8 X 50		1	924 924
29	N 015 401 4	washer 8,4		2	924
30	N 011 008 8	hexagon nut M 8		1	924
(31)	478 721 113 A	bracket		1	924
(31)	A 478 721 113 A	bracket	-80	1	TURBO
(31)	478 721 113 A	bracket		1	TURBO,GT
32	900 076 025 02	hexagon nut M 8		3	
33	N 012 229 3	spring washer A 8		3	
		clutch control hydraulic			TURBO, GT
34	478 721 171	clutch master cylinder		1	
35	928 423 908 00	bellows		1	
36	478 721 179	intermediate piece		1	
37	N 011 118 14	hexagon nut BM 8		1	
38	999 924 002 40	bush		1	
39	900 025 008 09	washer A 10,5		1	
40	999 166 034 02	sl-lock		1	
41	928 423 191 00	gasket		1	
42	N 012 229 3	spring washer B 8		2	
43	900 076 025 02	hexagon nut M 8		2	
44	478 721 219	connecting hose		1	
45	944 423 210 00	expansion tank		1	
46	211 611 381 B	strainer		1	
47	477 611 361	cover		1	
48	052 109 135	spacer sleeve		2	
49	N 012 226 5	spring washer B 6		2	
50	N 010 215 13	hexagon-head bolt M 6 X 15		2	
51	478 721 185 B	clutch tube		1	
52	478 721 189	clutch hose		1	
53	478 721 191 A	support clutch hose		1	
53A	928 423 183 01	hose holder		1	
54	E 478 721 195 A	retaining bracket clutch tube		1	
55	181 971 847	cable clip		1	
56	999 924 001 40	bush		1	
57	N 011 525 13	washer A 8,4		1	
58	N 900 470 01	lock washer 6		1	

- -- E N D -- -

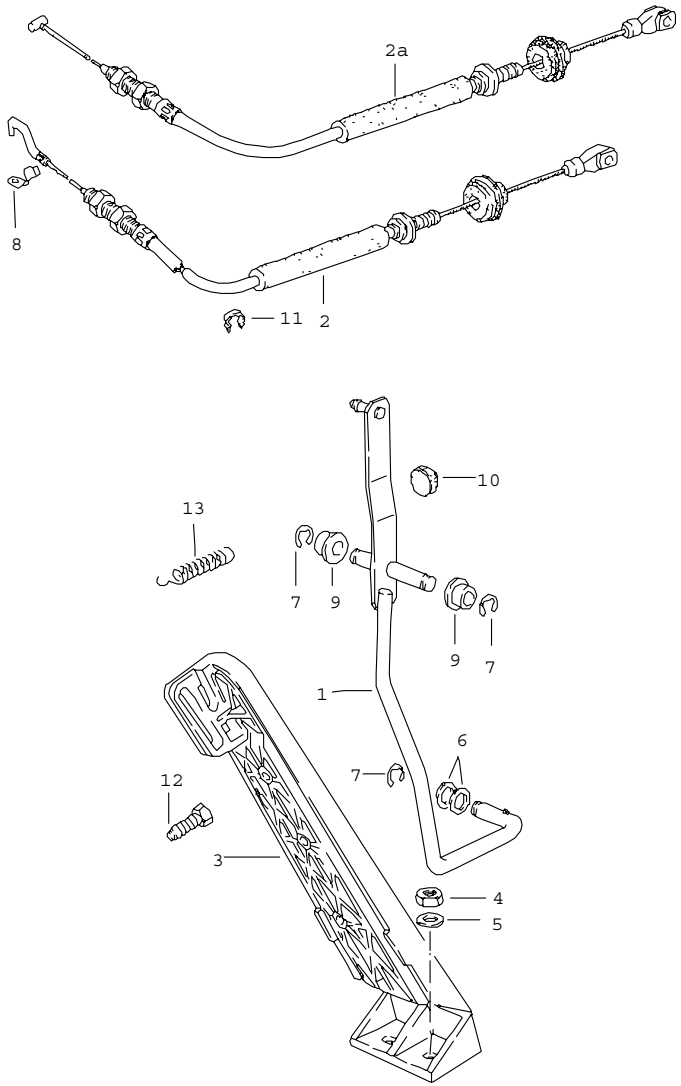

Pos	Part Number	Name	Remarks	Qty	Model
		accelerator control accelerator cable for manual transmission			
1	944 423 031 00	accelerator control	/LL -81	1	
(1)	944 423 031 00	accelerator control	/LL 82-	1	
(1)	945 423 031 01	accelerator control	/RL	1	
(1)	945 423 031 01	accelerator control	/RL	1	
2	477 721 547 F	accelerator cable	/LL	1	924
(2)	478 721 547 E	accelerator cable	/RL	1	924
(2)	477 721 547 E	accelerator cable	/LL -80	1	TURBO
(2)	E 478 721 547 D	accelerator cable	/RL -80	1	TURBO
2A	477 721 551	accelerator cable	/LL 81-	1	TURBO,GT
(2A)	478 721 551	accelerator cable	/RL 81-	1	TURBO,GT
3	827 723 511 A	accelerator pedal		1	
4	900 076 010 02	hexagon nut M 6		2	
5	803 817 121	washer		2	
6	900 025 038 40	washer		2	
7	N 012 436 2	lock washer		3	
8	E 823 721 569	retainer spring		1	
9	477 721 543	bearing sleeve		2	
10	999 703 183 40	buffer		1	
11	477 971 851	cable clip	/RL	1	
12	944 423 731 00	adjusting screw	82-	1	
13	944 423 831 00	spring	82-	1	TURBO

- -- E N D -- -

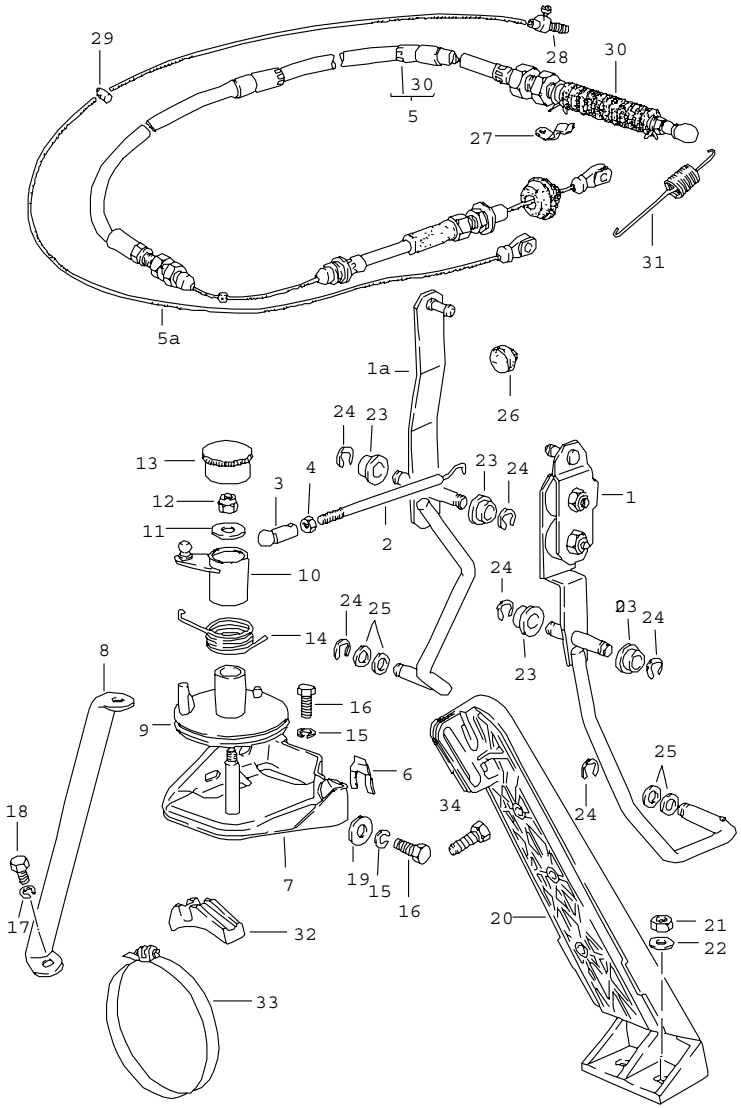

Pos	Part Number	Name	Remarks	Qty	Model
		accelerator control accelerator cable for automatic transmission			
1	944 423 033 00	accelerator control	/LL -81	1	
1	944 423 033 00	accelerator control	/LL 82-	1	
1A	945 423 031 01	accelerator control	/RL	1	
2	477 723 535	throttle linkage		1	
3	911 423 147 00	ball socket		1	
4	N 011 005 14	hexagon nut M 5		1	
5	477 723 575 A	accelerator cable for accelerator control and control pressure	/LL	1	
(5)	478 723 575 A	accelerator cable for accelerator control and control pressure	/RL	1	
(5)	478 723 575 A	cable for accelerator control and control pressure	/RL 83-	1	
5A	477 723 602 C	cable	/LL 82-	1	
5A	477 723 602 C	cable	/LL -81	1	
(5A)	478 723 602 B	cable	/RL	1	
6	N 012 323 1	circlip		1	
7	E 477 723 525	support		1	
8	477 723 579	bracket		1	
9	477 723 511	deflection roller		1	
10	477 723 515	accelerator control		1	
11	477 723 531	washer		1	
12	900 910 012 02	lock nut M 6		1	
13	999 659 045 40	protection cap		1	

Pos	Part Number	Name	Remarks	Qty	Model	Pos	Part Number	Name	Remarks	Qty	Model
14	477 723 523	spring		1							
15	N 012 226 5	spring washer B 6		3							
16	N 010 215 13	hexagon-head bolt M 6 X 15		3							
17	N 012 228 3	spring washer B 8		1							
18	N 010 237 6	hexagon-head bolt M 8 X 12		1							
19	900 151 006 09	washer B 6		2							
20	827 723 511 A	accelerator pedal		1							
21	900 076 010 02	hexagon nut M 6		2							
22	803 817 121	washer		2							
23	477 721 543	bearing sleeve		2							
24	N 012 436 2	lock washer		3							
25	900 025 038 40	washer		2							
26	999 703 183 40	buffer		1							
27	E 823 721 569	retainer spring		1							
28	477 723 601	nipple		1							
29	477 723 611	nipple		1							
30	311 713 269 A	bellows		1							
31	477 723 563 C	tension spring		1							
32	477 723 567	support		4							
33	999 512 350 02	hose clamp		4							
34	944 423 731 00	adjusting screw	82-	1							
		- -- E N D -- -									

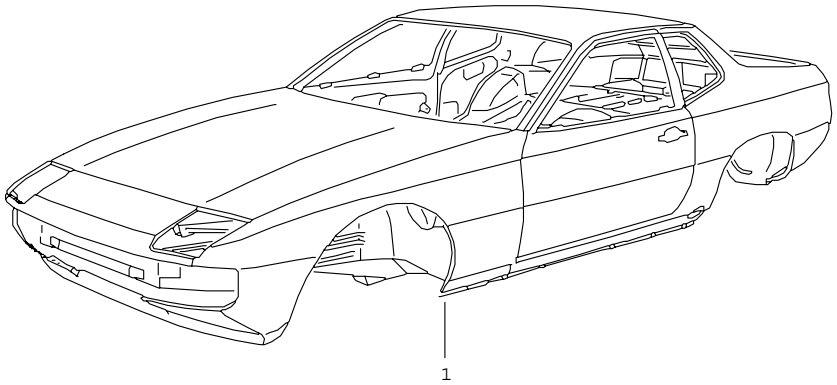

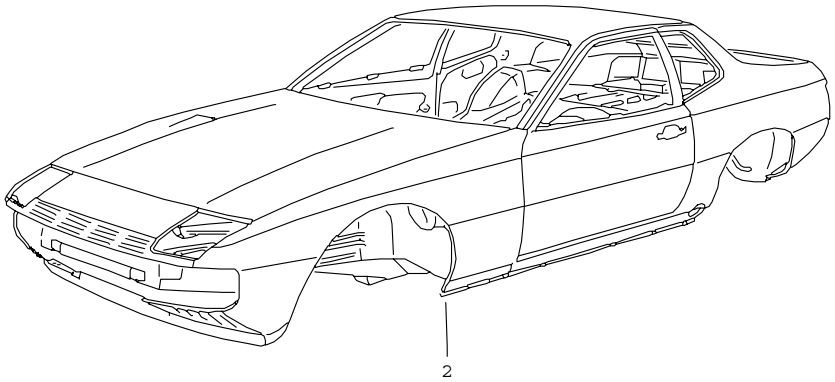

Pos	Part Number	Name	Remarks	Qty	Model
		body in white prime coated sealed with underbody protection bodyshells can only be delivered of the current model year			
(1)	E 477 800 403 AL	body in white	/LL	1	924
(1)	E 477 800 403 AM	body in white	/LL	1	924 M 650
(1)	E 477 800 403 AN	body in white	/LL	1	TURBO
(1)	E 477 800 403 AQ	body in white	/LL	1	TURBO M 650
(1)	E 478 800 403 Q	body in white	/RL	1	924
(1)	E 478 800 403 R	body in white	/RL	1	924 M 650
(1)	E 478 800 403 S	body in white	/RL	1	TURBO
(1)	E 478 800 403 T	body in white	/RL	1	TURBO M 650
		- -- E N D -- -			

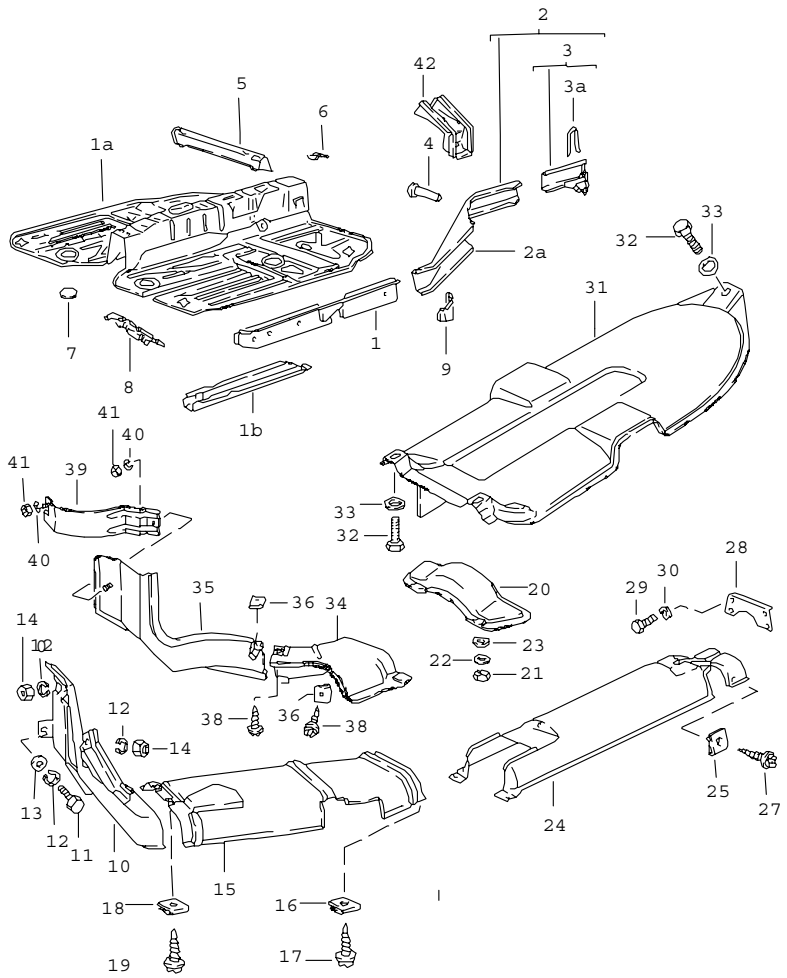

Pos	Part Number	Name	Remarks	Qty	Model
		side member cover plate			
1	477 803 103	side member centre F >>92BN4 02267 F >>93BN1 00360	/L	1	 924 TURBO
(1)	477 803 103 A	side member centre F 92BN4 02268>> F 93BN1 00361>> F 93BN7 00001>>	/L	1	 924 TURBO GT
(1)	477 803 112	side member centre F >>92BN4 02267 F >>93BN1 00360	/LL/R	1	 924 TURBO
(1)	478 803 104	side member centre F >>92BN4 02267 F >>93BN1 00360	/RL/R	1	 924 TURBO
(1)	478 803 104 B	side member centre F 92BN4 02268>> F 93BN1 00361>> F 93BN7 00001>>	/R	1	 924 TURBO GT
-	999 703 119 40	plug side member		X	
-	803 803 583	drain bush		X	
-	803 803 583 A	cap		X	
1A	944 501 501 00	floor section centre		1	
1B	477 803 283	side member		2	
2	477 803 105 A	side member use also: 477.803.145	/L	1	
(2)	477 803 106 A	side member F >>92CN4 02197 F >>93CN1 00305 use also: 477.803.145	/R	1	 924 TURBO
(2A)	477 803 116 A	side member F 92CN4 02198>> F 93CN1 00306>>	/R	1	

Pos	Part Number	Name	Remarks	Qty	Model
		use also: 477.803.145			
3	477 803 125 A	end piece	/L	1	
(3)	477 803 126	end piece F >>92CN4 02197 F >>93CN1 00305	/R	1	924 TURBO
(3)	944 502 066 00	end piece F 92CN4 02198>> F 93CN1 00306>>	/R	1	924 TURBO
3A	477 803 129	retaining bow		2	
4	477 803 145	bush shock absorber mounting		2	
5	E 477 803 231	cross member for front seat	/V /L	1	
(5)	477 803 232	cross member for front seat	/V /R	1	
6	477 803 241	bracket for front seat	/H	4	
7	411 803 595	cover 136 MM $		2	
8	477 803 729	foot support	/LL	1	
9	477 803 871 A	jacking point	/L	1	
(9)	477 803 872 A	jacking point	/R	1	
10	477 809 214 A	cover plate		1	924
11	999 072 005 09	hexagon-head bolt M 6 X 12		1	924
12	N 012 006 4	lock ring B 6		3	924
13	N 011 524 7	washer A 6,4		1	924
14	900 076 010 02	hexagon nut M 6		2	924
15	477 803 387 B	cover plate		1	924
16	999 591 485 02	speed nut BG 4,8		2	924
17	N 090 239 1	screw B 4,8 X 13		2	924
18	999 591 485 02	speed nut BG 4,8		2	924
19	N 090 239 1	screw B 4,8 X 13		2	924
20	477 803 253	strut		1	
21	N 011 008 8	hexagon nut M 8		4	
22	N 011 525 13	washer A 8,4		4	
23	900 027 015 02	lock ring B 8		4	
28	477 803 291	strut		2	
29	N 010 237 6	hexagon-head bolt M 8 X 12		8	
30	N 012 229 3	spring washer A 8		8	
31	944 503 139 00	cover plate oval F >>92CN4 02197 F >>93CN1 00305		1	924, TURBO 924 TURBO
(31)	944 503 139 00	cover plate F 92CN4 02198>> F 93CN1 00306>>		1	924 TURBO
(31)	944 503 139 00	cover plate		1	GT
32	999 072 005 09	hexagon-head bolt M 6 X 12		3	
33	900 151 029 02	washer 6,4		3	
34	477 803 393	cover plate		1	TURBO
35	477 803 394	cover plate		1	TURBO
36	999 591 485 02	speed nut BG 4,8		2	TURBO
38	N 090 239 1	screw B 4,8 X 13		2	TURBO
39	477 809 497	cover plate		1	TURBO

Pos	Part Number	Name	Remarks	Qty	Model
40	N 012 026 3	lock ring 6		2	TURBO
41	900 076 010 02	hexagon nut M 6		2	TURBO
42	944 201 045 00	cover F 92CN4 02198>> F 93CN1 00306>>		1	 924 TURBO
-	477 863 671 B	heat insulation	/H	1	TURBO
		- -- E N D -- -			

Model	Year	MG	SG	Illustration	Restrictions	Update	12:43	06.04.2005	PORSCHE PET PORSCHE
924	85	8	01	801-10		187			

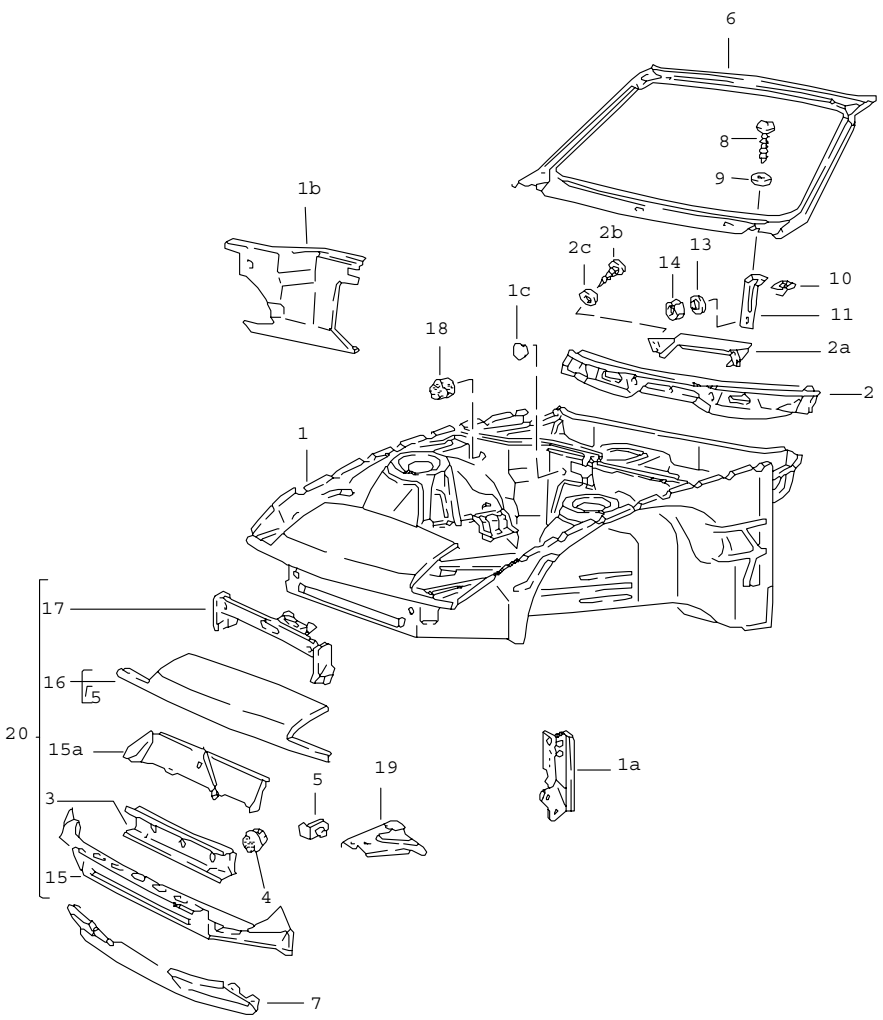

Pos	Part Number	Name	Remarks	Qty	Model
		front part			
(1)	477 805 021 AS	body front section F >>92CN4 02197 without carbon canister use also: plug 999 703 103 40	/LL	1 2	924
(1)	477 805 021 BJ	body front section F 92CN4 02198>>	/LL -83	1	924
(1)	477 805 021 BM	body front section F 92CN4 02198>> use also: plug 999 703 103 40	/LL -83	1 2	924 M 573
(1)	E 477 805 021 BQ	body front section	/LL 84-	1	924 M 573
(1)	477 805 021 AB	body front section without carbon canister use also: plug 999.703.103.40	/LL -80	1 2	TURBO
(1)	477 805 021 AT	body front section F >>93CN1 00305 without carbon canister use also: plug 999 703 103 40	/LL 81-	1 2	TURBO
(1)	477 805 021 BK	body front section F 93CN1 50332>>	/LL -83	1	TURBO
(1)	477 805 021 BN	body front section F 93CN1 00306>> use also: 2 plug 999 703 103 40	/LL -83	1	TURBO M 573
(1)	E 477 805 021 BP	body front section	/LL 84-	1	TURBO M 573
(1)	937 502 021 01	body front section	/LL	1	GT

Pos	Part Number	Name	Remarks	Qty	Model
(1)	478 805 021 M	body front section without carbon canister use also: plug 999.703.103.40	/RL -80	1 2	924
(1)	478 805 021 AQ	body front section F >>92CN4 02197 without carbon canister use also: plug 999 703 103 40	/RL 81-	1 2	924
(1)	478 805 021 BH	body front section F 92CN4 02198>> without carbon canister use also: plug 999 703 103 40	/RL -83	1 2	924
(1)	E 478 805 021 BK	body front section	/RL 84-	1	924 M 573
(1)	478 805 021 AR	body front section F >>93CN1 00305 without carbon canister use also: plug 999 703 103 40	/RL	1 2	TURBO
(1)	E 478 805 021 BJ	body front section F 93CN1 00306>> without carbon canister use also: plug 999 703 103 40	/RL	1 2	TURBO
(1)	938 502 021 01	body front section without carbon canister use also: plug 999 703 103 40	/RL	1 2	GT
(1A)	477 805 057 A	reinforcement		1	
(1A)	477 805 058 A	reinforcement		1	
(1B)	477 805 433	firewall	/L -80	1	
(1B)	944 502 201 00	firewall	/L	1	
(1B)	944 502 202 00	firewall	/R	1	
1A	111 971 911 A	rubber sleeve F 92CN4 02198>> F 93CN1 00306>>		1	924 TURBO
2	944 502 079 00	cross member F >>92CN4 02197 F >>93CN1 00305	/LL	1	924 TURBO
(2)	944 502 079 00	cross member F 92CN4 02198>> F 93CN1 00306>>	/LL	1	924 TURBO
(2)	945 502 079 00	cross member F >>92CN4 02197 F >>93CN1 00305	/RL	1	924 TURBO
(2)	945 502 079 00	cross member F 92CN4 02198>> F 93CN1 00306>>	/RL	1	924 TURBO
2A	944 572 377 00	bracket for heating F 92CN4 02198>> F 93CN1 00306>>		1	924 TURBO
2B	N 013 883 3	tapping screw B 4,8 X 9,5 F 92CN4 02198>> F 93CN1 00306>>		4	924 TURBO
2C	N 011 523 9	washer A 5,3 X 10		4	
3	944 502 077 00	cross member		1	
(3)	937 501 043 00	cross member	/V	1	GT
4	803 803 583	drain bush		3	
5	E 477 805 567	bracket	/L	1	
(5)	477 805 568	bracket	/R	1	
6	477 805 571 A	windscreen frame		1	
(7)	944 503 035 01	spoiler		1	924
(7)	944 503 035 00	spoiler		1	TURBO
8	900 143 046 07	tapping screw B 4,8 X 16		4	

Pos	Part Number	Name	Remarks	Qty	Model
9	900 025 003 02	washer A 5,3		4	
10	N 015 458 1	speed nut 4,8 X 14,8		4	
11	477 805 592	cowl panel support		2	
13	N 011 612 3	washer R 7		2	
14	900 910 012 02	lock nut M 6		2	
(15)	944 503 043 00	end plate lower		1	
(15)	937 503 135 00	end plate lower		1	GT
(15A)	944 502 061 00	air duct		1	
16	477 805 593	end plate upper		1	924
(16)	E 477 805 593 A	end plate upper		1	TURBO, GT
(17)	944 501 933 01	lock carrier		1	924,TURBO,GT
-	928 025 283 02	rubber seal for lock carrier		*	GT
		580 MM		1	GT
18	477 805 667	water drain valve		2	
19	477 805 699	corner plate	/L	1	
(19)	477 805 699 A	corner plate	/L	1	M 573
-	477 805 693	support for horn		1	
20	477 805 591	terminal piece complete		1	924
		- -- E N D -- -			

Model	Year	MG	SG	Illustration	Restrictions	Update	12:43	06.04.2005	PORSCHE PET PORSCHE
924	85	8	01	801-15		187			

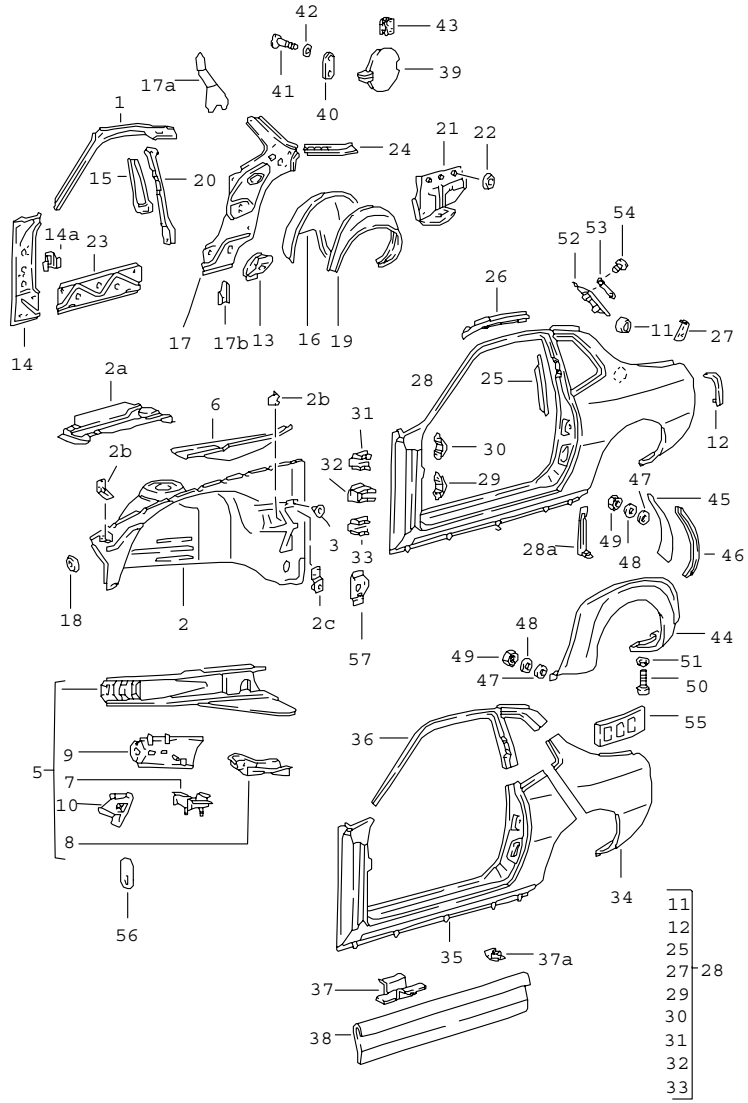

Pos	Part Number	Name	Remarks	Qty	Model
		side section			
1	477 809 037	separator	/L	1	
(1)	477 809 037	separator	/L	1	M650
(1)	477 809 038	separator	/R	1	
(1) A	477 809 038	separator	/R	1	M650
-	311 881 945 A	plug		3	
(2)	477 809 103 D	wheel housing without carbon canister use also: plug 999 703 103 40 mounting 944 502 071 00	/L 84-	1 2	
(2)	477 809 107 D	wheel housing	/L	1	
(2)	477 809 104 D	wheel housing use also: 478 809 446	/R /RL	1	
(2)	477 809 108 C	wheel housing	/R	1	
-	999 703 103 40	plug		2	
-	477 809 374	support fuel filter	81-	1	924
-	477 809 484	bearing bracket engine mounting	/R	1	TURBO
-	477 863 557	heat protection	/R	1	TURBO
-	478 809 446	bearing bracket throttle linkage	/RL	1	
(2A)	477 809 867 B	bracket	-80	1	
2A	477 809 867 B	bracket	81-82	1	
(2A)	477 809 867 C	bracket	83-	1	
2B	937 501 141 00	bracket		4	GT
2C E	937 501 117 00	support for antenna	/L	1	GT
3	N 020 025 1	plug		X	
3	999 703 179 40	plug		X	

Pos	Part Number	Name	Remarks	Qty	Model
(5)	477 809 111 Q	side member F >>92CN4 02197 F >>93CN1 00305	/L	1	924 TURBO
(5)	477 809 111 R	side member F 92CN4 02198>> F 93CN1 00306>>	/L	1	924 TURBO
(5)	477 809 112 Q	side member F >>92CN4 02197 F >>93CN1 00305	/R	1	924 TURBO
(5)	477 809 112 R	side member F 92CN4 02198>> F 93CN1 00306>>	/R	1	924 TURBO
6	477 809 119	side member upper left	/LL	1	924
(6)	945 502 119 02	side member upper left	/RL	1	
(6)	477 809 119 A	side member upper left	/LL	1	TURBO,GT
(6)	477 809 120	side member upper right	/LL	1	
(6)	478 809 120	side member upper right	/RL	1	924
(6)	478 809 120 A	side member upper right	/RL	1	TURBO,GT
7	477 809 151	bearing bracket		2	
8	951 501 165 00	end plate	/L	1	
(8)	951 501 166 00	end plate	/R	1	
(9)	944 501 081 00	filler plate side member	/L	1	
(9)	944 501 082 00	filler plate side member	/R	1	
10	477 809 221 A	separator	/L	1	924,TURBO
(10)	937 501 145 00	separator	/L	1	GT
(10)	477 809 268 B	separator	/R	1	924,TURBO
(10)	937 502 268 00	separator	/R	1	GT
-	477 809 525	towing lug	/R	1	924,TURBO
-	E 937 501 525 00	towing lug	/R	1	GT

Pos	Part Number	Name	Remarks	Qty	Model
11	477 809 040	retainer tank filler neck		1	
12	477 809 375 A	bracket for light	/L	1	
(12)	477 809 376 A	bracket for light	/R	1	
13	477 809 387 A	corner plate	/L	1	924,TURBO
(13)	937 502 387 01	corner plate	/L	1	GT
(13)	477 809 388 A	corner plate	/R	1	924,TURBO
(13)	937 502 388 01	corner plate	/R	1	GT
14	477 809 393 A	hinge pillar inner use also: POS. 14A	/L /LL 84-	1	
(14)	477 809 394 A	hinge pillar use also: POS. 14A	/R /RL 84-	1	
14A	944 502 373 00	mounting switch rear lid unlocking device	84-	1	
15	477 809 397	centre pillar inner	/L	1	
(15)	477 809 398	centre pillar	/R	1	
16	477 809 403 F	wheel housing inner	/L	1	
(16)	477 809 404 H	wheel housing F >>92CN4 02197 F >>93CN1 00305	/R	1	924 TURBO
(16)	944 501 043 00	wheel housing inner		1	
(16)	944 501 044 00	wheel housing F 92CN4 02198>> F 93CN1 00306>>	/R	1	924 TURBO
17	944 502 901 00	side section inner use also: 937.502.393.00	/L -83	1 1	GT
17	944 502 901 01	side section inner	/L 84-	1	

Pos	Part Number	Name	Remarks	Qty	Model
(17)	944 502 902 00	side section inner with expansion tank use also: 937.502.394.00	/R -83	1 GT 1	
(17)	944 502 902 01	side section inner	/R 84-	1	
17B	937 502 393 00	support flared wheel arches	/L	1	GT
(17B)	937 502 394 00	support flared wheel arches	/R	1	GT
18	803 803 583 A	cover		8	
19	477 809 411 B	wheel housing	/L	1	924,TURBO
(19)	937 502 411 00	wheel housing	/L	1	GT
(19)	477 809 412 B	wheel housing	/R	1	924,TURBO
(19)	937 502 412 00	wheel housing	/R	1	GT
20	944 502 049 00	reinforcement	/L	1	
(20)	944 502 050 00	reinforcement	/R	1	
21	477 809 421 A	side section inner use also: 937.502.381.00	/L	1 GT 2	
(21)	477 809 422 A	side section use also: 937.502.381.00	/R	1 GT 2	
-	937 502 381 00	bracket flared wheel arches		4	GT
22	803 803 583	drain bush		X	
(22)	021 119 569	rubber sleeve		X	M 650
23	477 809 433	separator lower		2	
24	944 502 439 00	reinforcement		1	
(24)	477 809 440	reinforcement		1	
25	477 809 445	reinforcement	/L	1	
(25)	477 809 446	reinforcement	/R	1	
26	477 809 585	filler plate		1	
(26)	477 809 586	filler plate		1	
27	477 809 617	retaining bracket	/L	1	
(27)	477 809 618	retaining bracket	/R	1	
28	477 809 601 AA	side section outer see workshop manual	/L	1	924
(28)	477 809 601 AC	side section outer see workshop manual	/L	1	TURBO
(28)	937 503 065 00	side section outer use also: 937.502.395.00	/L	1 1	GT
(28)	477 809 602 BE	side section outer see workshop manual	/R	1	924
(28)	477 809 602 BE	side section outer see workshop manual	/R	1	TURBO
(28)	937 503 066 00	side section outer use also: 937.502.395.00	/R	1 1	GT
28A	937 502 395 00	bracket flared wheel arches		2	GT
(28)	937 503 605 00	side section outer	/L	1	GT
(28)	937 503 606 00	side section	/R	1	GT
29	477 809 619	mounting plate	/L	1	
(29)	477 809 620	mounting plate	/R	1	
30	477 809 653	mounting plate		2	
31	477 809 655	hinge reinforcement upper		2	
32	477 809 625	reinforcement		2	
33	477 809 621	hinge reinforcement lower	/L	1	
(33)	477 809 622	hinge reinforcement lower	/R	1	

Pos	Part Number	Name	Remarks	Qty	Model
34	E 477 809 843 F	sub-part wing	/L	1	924,TURBO
(34)	477 809 844 F	sub-part wing	/R	1	924,TURBO
35	477 809 847 B	side member section	/L	1	924,TURBO
(35)	477 809 848 B	side member section	/R	1	924,TURBO
36	477 809 849 A	sub-part roof pillar F >>92CN4 02197 F >>93CN1 00305	/L	1	924,TURBO 924 TURBO
36	477 809 849 A	sub-part roof pillar F 92CN4 02198>> F 93CN1 00306>>	/L	1	924,TURBO 924 TURBO
(36)	477 809 850 A	sub-part roof pillar	/R	1	924,TURBO
37	477 809 471	support		10	TURBO
37	477 809 471	support		10	924 M 603
37A	937 503 059 00	angle		8	GT
38	477 809 685	attachment strip	/L	1	TURBO
(38)	477 809 686	attachment strip	/R	1	TURBO
38	477 809 685	attachment strip	/L	1	924 M 603
(38)	477 809 686	attachment strip	/R	1	924 M 603
(38)	937 503 511 00	attachment strip		2	GT
39	477 853 095 A	flap		1	
40	477 853 403	desk pad		X	
41	900 146 003 02	oval-head screw M 5 X 11		2	
42	N 012 222 4	spring washer B 5		2	
43	E 477 853 401	stop rubber	-82	1	
(43)	931 504 397 00	stop rubber	83-	1	
44	E 937 503 031 02	flared wheel arches	/L	1	GT
(44)	937 503 032 02	flared wheel arches	/R	1	GT
-	937 559 161 01	piping flared wheel arches	/L	1	GT
	M3A	guards red			
	041	black			
	97A	silver			
-	937 559 162 01	piping flared wheel arches	/R	1	GT
	M3A	guards red			
	041	black			
	97A	silver			
45	937 503 233 02	bulkhead	/L	1	GT
(45)	937 503 234 02	bulkhead	/R	1	GT
46	928 025 283 02	rubber seal 566 MM		* GT 2	
47	211 853 611	sealing washer		26	GT
48	900 151 003 02	washer A 6,4		30	GT
49	N 011 183 9	hexagon nut M 6		32	GT
50	900 067 185 07	pan-head screw M 6 X 12		6	GT
51	937 503 255 00	spacer		6	GT
52	E 477 809 097	reinforcement	/L	1	
(52)	E 477 809 098	reinforcement	/R	1	
53	928 504 355 02	gasket		4	
54	999 015 005 07	half-round screw		4	
55	944 555 275 00	filler piece	/L	1	
(55)	944 555 276 00	filler piece	/R	1	
56	477 809 035	support water reservoir		1	
57	944 502 071 00	mounting	84-	1	

- -- E N D -- -

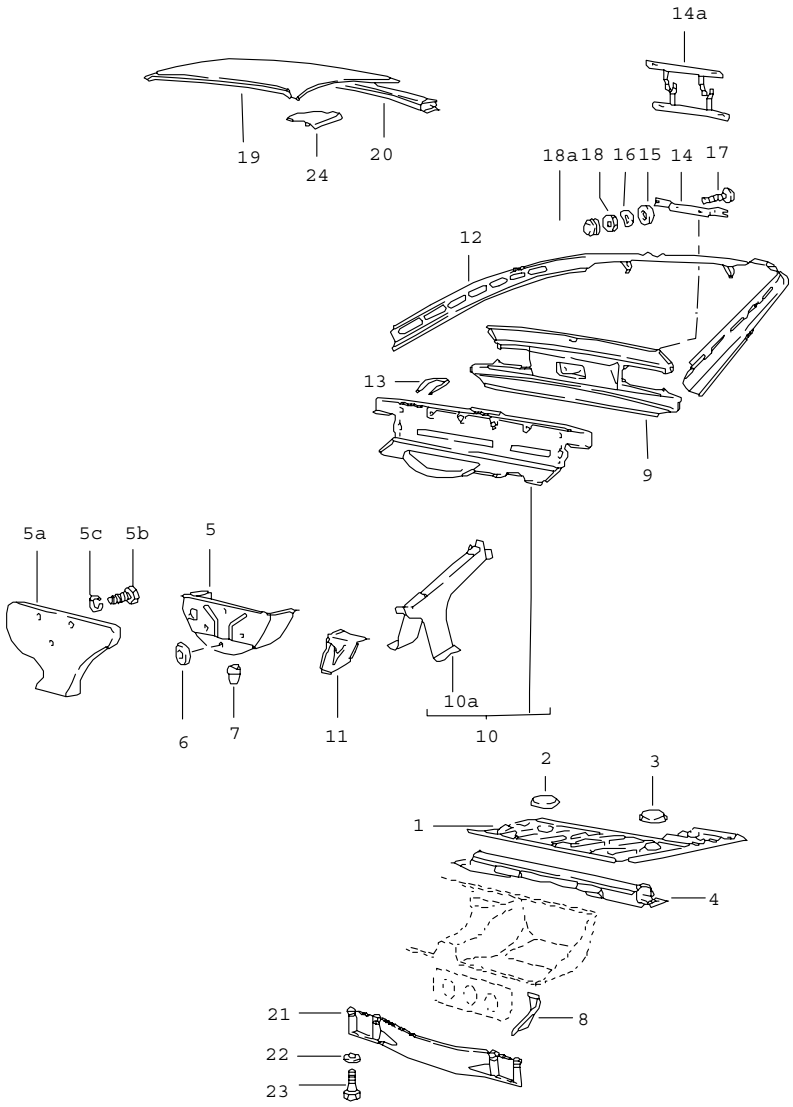

Pos	Part Number	Name	Remarks	Qty	Model
		transmission carrier boot floor plate roof			
1	944 501 075 00	boot floor plate		1	
2	477 803 581	cover		1	
3	411 803 595	cover 136 MM $		1	
4	477 813 115 C	transmission carrier		1	
5	477 813 131	spare-wheel well	/V	1	
6	803 803 583	drain bush		3	
7	111 701 309	rubber sleeve		1	
8	477 813 145 B	corner panel	/L	1	
(8)	477 813 146 B	corner panel	/R	1	
9	944 503 037 01	end plate	-84	1	
9	944 503 037 01	end plate	85-	1	
-	477 813 345 A	reinforcement	/L -84	1	
-	944 502 345 01	reinforcement	/L 85-	1	
-	944 502 346 01	reinforcement	/R	1	
(9)	944 503 901 01	end plate		1	
-	999 703 179 40	plug F 92CN4 02198>> F 93CN1 00306>>		1	
(10)	944 503 901 00	end plate lower	/H	1	GT
-	477 813 169	angle jack	/L	1	
-	477 813 170	angle jack	/R	1	
-	477 813 165	support		1	
10A	477 813 393 A	support exhaust system F >>92CN4 02197 F >>93CN1 00305		1	924,TURBO 924 TURBO
(10A)	944 502 091 00	support exhaust system		1	GT

Pos	Part Number	Name	Remarks	Qty	Model
(10A)	944 502 091 00	support exhaust system F 92CN4 02198>> F 93CN1 00306>>		1	924 TURBO
11	477 813 309	corner panel	/L	1	
(11)	944 502 210 00	corner panel	/R	1	
12	A 944 502 035 02	lock carrier	/H -84	1	
12	944 502 035 02	lock carrier	/H	1	
-	951 512 447 00	reinforcement plate lock carrier		2	
13	477 813 529	towing lug		1	
14	911 701 121 03	support		1	
-	N 015 430 1	speed nut		2	
14A	928 701 050 03	support		2	(CH,USA,J)
15	803 011 243	rubber washer	-84	2	
15	803 011 243	rubber washer	85-	2	
16	N 012 226 5	spring washer A 6	-84	2	
(16)	900 151 027 02	washer A 5,3	85-	2	
17	N 014 140 5	oval-head screw M 6 X 15	-84	2	
17	N 014 143 1	oval-head screw AM 6 X 22	85-	2	
18	900 076 010 02	hexagon nut M 6		2	
18A	211 611 483	dust boot		1	
(19)	A 944 503 912 01	roof	-83	1	M 650
(19)	944 503 912 01	roof	-83	1	M 650
(19)	A 944 502 031 01	roof	84-	1	M 650
(19)	944 503 912 00	roof	84-	1	M 650
19	A 477 817 111 B	roof		1	
19	944 503 912 02	roof		1	
20	477 817 171	cross member	/H -83	1	
20	477 817 171 A	roof frame	/H	1	
21	477 813 285	strut		1	
22	900 074 181 02	screw M 10 X 95		4	
23	900 025 008 09	washer 10,5		4	
24	477 817 033	reinforcement	/L/V	1	
(24)	477 817 034	reinforcement	/R/V	1	

- -- E N D -- -

Model	Year	MG	SG	Illustration	Restrictions	Update	12:43	06.04.2005	PORSCHE PET PORSCHE
924	85	8	01	801-25		187			

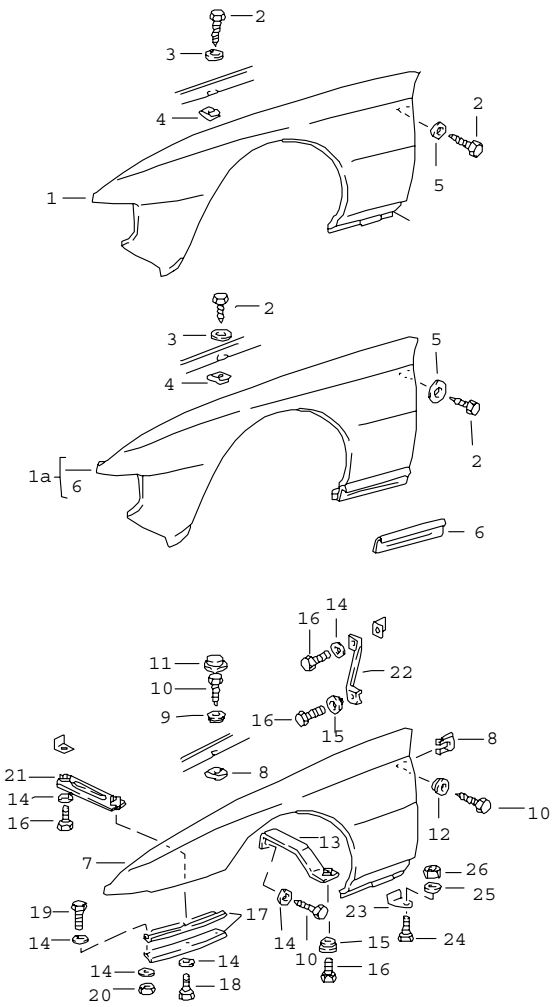

Pos	Part Number	Name	Remarks	Qty	Model
		wing			
1	477 821 021 M	wing	/L 80	1	924
(1)	477 821 022 M	wing	/R 80	1	924
(1)	477 821 021 N	wing	/L 81-	1	924
(1)	477 821 022 N	wing	/R 81-	1	924
1A E	477 821 021 D	wing	/L 80	1	924, TURBO
(1A)	477 821 022 D	wing	/R 80	1	924, TURBO
(1A)	477 821 021 J	wing	/L 81-	1	TURBO
(1A)	477 821 022 J	wing	/R 81-	1	TURBO
2	N 013 891 1	tapping screw 6,3 X 19		28	
3	900 151 029 02	washer B 6,4		26	
4	999 507 003 02	speed nut B 6,3 X 17		26	
5	N 011 524 7	washer A 6,4		2	
6	477 809 681	attachment strip		2	
7	937 503 105 02	wing	/L	1	GT
(7)	937 503 106 02	wing	/R	1	GT
8	999 507 003 02	speed nut B 6,3 X 17		22	GT
9	937 503 255 01	spacer		16	GT
10	N 013 891 1	tapping screw 6,3 X 19		24	GT
11	937 503 237 00	cap		16	GT
	M3A	guards red			
	041	black			
	97A	DIAMANTSILBER			
12	937 503 255 00	spacer		6	GT
13	937 503 035 00	wing strut		2	GT
14	N 011 524 7	washer A 6,4		12	GT

Pos	Part Number	Name	Remarks	Qty	Model
15	937 503 255 00	spacer		2	GT
15A	937 503 255 01	spacer		2	GT
16	999 217 013 00	hexagon-head bolt M6 X 12		8	GT
17	937 503 513 00	attachment strip		4	GT
18	999 217 014 00	hexagon-head bolt M6 X 16		2	GT
19	N 010 215 13	hexagon-head bolt M6 X 15		4	GT
20	900 910 010 09	lock nut M 6		4	GT
21	937 503 037 00	bracket		2	GT
22	937 503 039 00	bracket		2	GT
23	937 501 143 00	bracket		2	GT
24	999 217 013 00	hexagon-head bolt M6 X 12		2	GT
25	N 011 524 7	washer A 6,4		2	GT
26	900 076 010 07	hexagon nut M 6		2	GT
		- -- E N D -- -			

Pos	Part Number	Name	Remarks	Qty	Model

Model	Year	MG	SG	Illustration	Restrictions	Update	12:44	06.04.2005	PORSCHE PET PORSCHE
924	85	8	02	802-00		187			

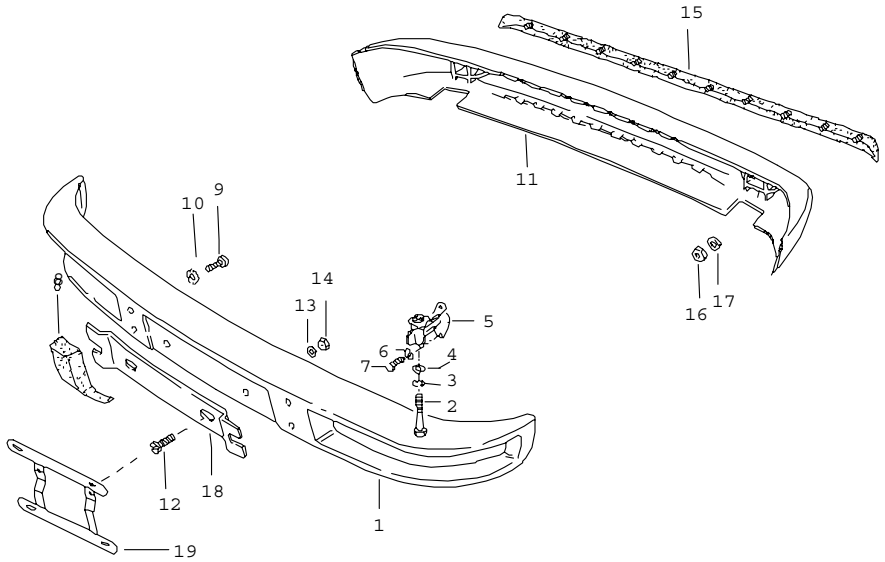

Pos	Part Number	Name	Remarks	Qty	Model
		bumper without impact absorber			+924,TURBO
1	477 807 113	bumper	/V	1	
(1)	477 807 113 B	bumper	/V	1	M288
2	900 074 064 02	hexagon-head bolt M 10 X 60		4	
3	900 027 016 02	lock ring B 10		4	
4	900 025 008 09	washer A 10,5		4	
5	477 807 131 A	bumper reinforcement		4	
6	900 027 015 02	lock ring A 8		8	
7	900 075 079 02	hexagon-head bolt M 8 X 20		8	
8	477 807 193	bumper horn for bumper	/L	1	
(8)	477 807 194	bumper horn for bumper	/L	1	
9	900 067 011 02	pan-head screw M 6 X 20		4	
10	N 012 105 3	serrated lock washer A 6,4		4	
11	477 807 313	bumper	/H	1	
12	N 014 140 5	oval-head screw M 6 X 15	-84	2	
12	N 100 457 01	countersunk-head screw M 5 X 25	85-	2	
13	N 012 226 5	spring washer A 6,3	-84	2	
13	900 151 027 02	washer A 5,3	85-	2	
14	900 076 010 02	hexagon nut M 6	-84	2	
14	900 910 009 02	lock nut M 5	85-	2	
15	477 807 319	protective moulding	/H	1	

Pos	Part Number	Name	Remarks	Qty	Model
16	113 101 175	hexagon nut M 6		10	
17	N 011 524 7	washer A 6,4		10	
18	911 701 121 03	support		1	
-	N 015 430 1	speed nut		2	
19	928 701 050 03	support		1	(J)
		- -- E N D -- -			

Model	Year	MG	SG	Illustration	Restrictions	Update	12:44	06.04.2005	PORSCHE PET PORSCHE
924	85	8	02	802-05		187			

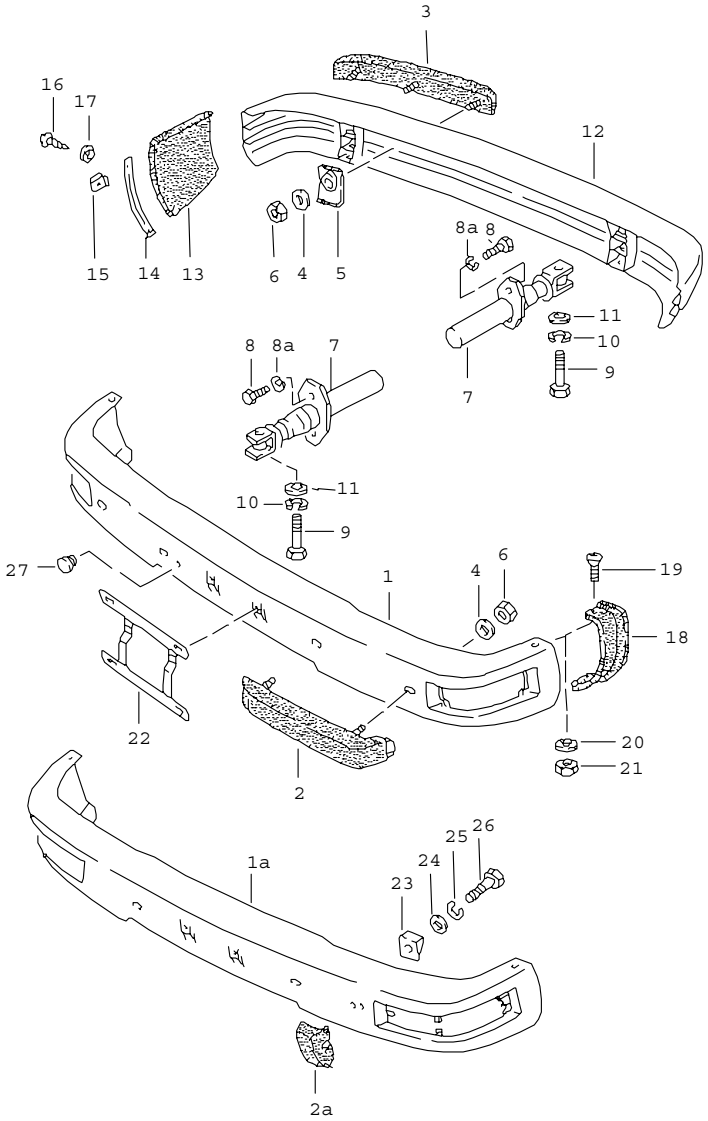

Pos	Part Number	Name	Remarks	Qty	Model
		bumper with impact absorber			+924,TURBO
(1A)	477 807 109 H	bumper use also: 999.703.181.40	/V	1 1	M 058
(1A)	477 807 109 C	bumper F >>92CN4 02197 F >>93CN1 00305	/V	1	M 058/288 924 TURBO
(1A)	477 807 109 J	bumper F 92CN4 02198>> F 93CN1 00306>>	/V	1	M 058/288
2A	477 807 353	bumper horn	/L	1	M 058
(2A)	477 807 354	bumper horn	/R	1	M 058
(3)	477 807 157	rubber moulding	/L	1	
3	477 807 158	rubber moulding	/R	1	
4	N 011 612 3	washer R 7		6	M 058
5	477 807 197	support	/H	6	
6	113 101 175	hexagon nut		6	M 58
7	944 505 017 03	impact absorber		4	
8	N 010 240 16	hexagon-head bolt M 8 X 20		8	
8A	900 027 015 02	lock ring A 8		8	
9	N 010 165 2	hexagon-head bolt M 12 X 65		4	
10	N 012 012 4	lock ring B 12		4	
11	N 011 531 7	washer A 13		4	
12	477 807 301 A	bumper	/H	1	
(13)	E 477 807 343	cover	/L	1	
13	477 807 344	cover	/R	1	
(14)	477 807 345	insert	/L	1	
14	477 807 346	insert	/R	1	

Pos	Part Number	Name	Remarks	Qty	Model	Pos	Part Number	Name	Remarks	Qty	Model
15	N 015 438 1	speed nut B 3,6 X 16,5		4							
16	N 013 959 3	tapping screw B 3,5 X 16		4							
17	900 151 028 02	washer		4							
18	477 807 347	cap	/L	1							
(18)	477 807 348	cap	/R	1							
19	N 014 260 1	oval-head screw AM 4 X 14		4							
20	900 151 028 02	washer B 4,3		4							
21	N 011 004 6	hexagon nut M 4		4							
22	928 701 050 03	support		1							
23	477 807 361	plate	/L	1	M58						
(23)	477 807 362	plate	/R	1	M58						
24	N 011 652 1	washer 7		2	M58						
25	N 012 006 4	lock ring B 6		2	M58						
26	N 010 339 3	hexagon-head bolt M 6 X 40		2	M58						
27	999 703 181 40	plug towing lug see group 0/01/00		1 1	M58 M 058						
		- -- E N D -- -									

Model	Year	MG	SG	Illustration	Restrictions	Update	12:44	06.04.2005	PORSCHE PET PORSCHE
924	85	8	02	802-10		187			

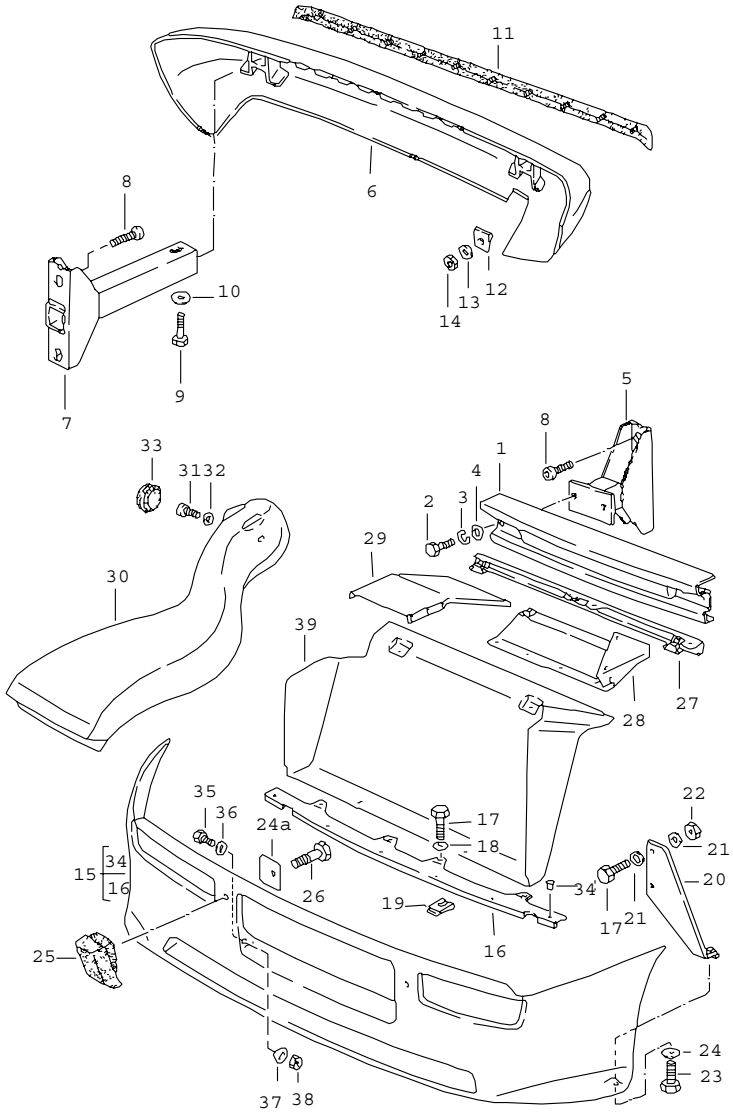

Pos	Part Number	Name	Remarks	Qty	Model
		bumper spoiler air duct	/V		+GT
1	937 505 113 00	bumper	/V	1	
2	900 075 085 02	hexagon-head bolt M 8 X 20		4	
3	900 027 015 02	lock ring B 8		4	
4	900 151 008 02	washer 8,4		4	
5	937 505 027 02	bumper reinforcement	/V	2	
6	937 505 017 00	bumper	/H	1	
7	E 937 505 027 01	bumper reinforcement	/H	2	
8	N 014 707 4	pan-head screw M 8 X 15		8	
9	900 074 134 02	hexagon-head bolt M 8 X 45		2	
10	900 025 007 02	washer A 8,4		2	
11	477 807 319	protective moulding	/H	1	
12	E 937 505 163 00	plate		10	
13	N 011 524 7	washer A 6,4		10	
14	113 101 175	hexagon nut M 6		10	
15	E 937 505 371 02	spoiler	/V	1	
16	937 505 375 00	reinforcement	/V	1	
17	999 072 005 09	hexagon-head bolt M 6 X 12		8	
18	900 151 006 09	washer B 6,4		4	
19	999 507 333 02	captive nut M 6		4	
20	937 505 031 00	bracket	/L	1	
(20)	937 505 032 00	bracket	/R	1	

Pos	Part Number	Name	Remarks	Qty	Model
21	N 011 524 7	washer A 6,4		8	
22	900 910 010 09	lock nut M 6		8	
23	999 217 013 00	hexagon-head bolt M 6 X 12		2	
24	937 503 255 01	spacer		2	
24A	937 503 257 00	mounting plate		2	
25	937 505 181 00	buffer	/L	1	
(25)	937 505 182 00	buffer	/R	1	
26	E 999 217 016 00	hexagon-head bolt M 6 X 20		2	
27	937 501 251 00	attachment strip		1	
28	937 505 071 00	filler plate		1	
29	937 505 173 00	cover		1	
30	E 937 505 381 00	air well	/L	1	
(30)	937 505 382 00	air well	/R	1	
31	E 999 218 006 07	pan-head screw M 8 X 20		2	
32	E 900 151 008 07	washer 8,4		2	
33	803 803 583	drain bush		2	
34	E N 901 046 01	rivet A 4,8 X 9,6		9	
35	E 900 075 329 00	hexagon-head bolt M6 X 12		2	
36	N 011 524 7	washer 6,4		2	
37	937 503 255 00	spacer		2	
38	900 910 010 09	lock nut M 6		2	
39	937 501 241 00	air duct		1	
-	928 025 283 02	rubber seal air duct 290 MM 190 MM 150 MM		* 1 1 1	
(39)	E 937 501 241 01	air duct		1	M 573
-	928 025 283 02	rubber seal air duct 290 MM 150 MM		* 1 1	M 573 M 573 M 573
-	999 217 014 00	hexagon-head bolt M 6 X 16		2	
-	900 151 006 09	washer B 6,4		2	

- -- E N D -- -

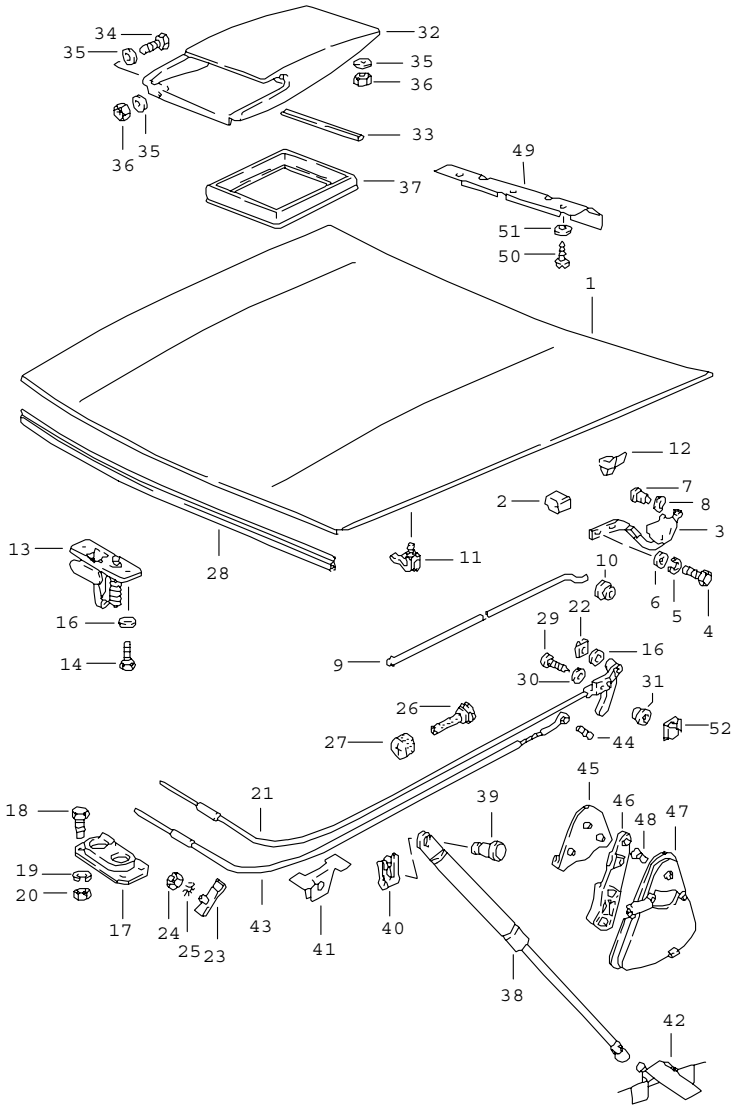

Pos	Part Number	Name	Remarks	Qty	Model
		cover	/V		
1	944 511 905 00	cover		1	924
(1)	944 511 905 01	cover		1	TURBO
(1)	937 511 005 02	cover		1	GT
2	477 823 185	filler piece		2	
3	944 511 301 00	hinge	/L	1	
(3)	944 511 302 00	hinge	/R	1	
4	N 010 240 16	hexagon-head bolt M 8 X 20		8	
5	900 027 015 02	lock ring B 8		8	
6	N 011 525 13	washer A 8,4		8	
7	477 823 307	pin	-84	2	
7	944 511 307 00	pin	85-	2	
8	N 012 230 6	spring washer B 10	-84	2	
8	944 511 309 00	washer	85-	2	
9	477 823 363 A	hood stay		1	
10	171 823 395	rubber mounting		1	
(11)	431 823 397	support		1	
12	477 823 493	guide piece		4	924,TURBO
(12)	937 511 237 00	guide piece		4	GT
13	477 823 507	lock upper part lid lock		1	
14	999 072 005 09	hexagon-head bolt M 6 X 12		2	
16	E 999 025 049 02	washer	-83	2	
17	928 511 027 02	lid lock lower part		1	
18	900 075 116 02	hexagon-head bolt M 4 X 8		4	
19	N 012 004 2	lock ring B 4		4	

Pos	Part Number	Name	Remarks	Qty	Model
20	N 011 004 6	hexagon nut M 4		4	
21	477 823 531 A	lid lock cable	-83	1	
22	N 012 855 1	clamping washer	-83	1	
23	477 823 551	clamping piece		1	
24	900 076 010 02	hexagon nut M 6		1	
25	N 042 121 3	shake-proof washer A 6,4		1	
26	477 823 591	grommet		1	
27	477 823 593	plug		1	
28	928 511 141 04	gasket		1	
29	N 013 952 1	tapping screw 4,8 X 50	-83	2	
30	900 025 003 02	washer A 5,3	-83	2	
31	477 823 165	bush		2	
32	937 511 051 00	air inlet		1	GT
-	937 571 121 01	piping		1	GT
	M3A	guards red			
	041	black			
	97A	silver			
-	999 911 276 40	gasket		*	
33	-	250 MM		1	GT
34	N 010 205 6	hexagon-head bolt M 5 X 10		2	GT
35	N 011 537 3	washer A 5,3		11	GT
36	900 910 007 02	lock nut M 5		9	GT
37	937 511 113 00	gasket charge air cooler		1	GT
38	944 511 351 01	gas-filled strut		2	924
39	999 094 011 09	bolt		2	924
40	N 900 470 01	lock washer		2	
41	944 511 373 00	pneumatic spring mount		2	924
42	944 501 371 00	pneumatic spring mount	/L	1	924
(42)	944 501 372 00	pneumatic spring mount	/R	1	924
43	944 511 037 00	bowden cable	84-	1	
44	900 197 018 00	roll pin 4 X 12	84-	1	
45	928 511 143 02	cover	84-	1	
46	928 511 175 02	pull handle	84-	1	
	70B	black			
47	928 511 173 02	cup	84-	1	
	70B	black			
48	900 249 001 02	countersunk-head screw M 6 X 15	84-	2	
49	944 511 201 00	tab washer		1	M 533
50	900 143 007 02	tapping screw BZ 4,2 X 13		3	M 533
51	900 025 002 02	washer BZ 4,3 X 9		3	M 533
52	999 591 468 02	prestole cage B 4,8		2	

- -- E N D -- -

Model	Year	MG	SG	Illustration	Restrictions	Update	12:45	06.04.2005	PORSCHE PET PORSCHE
924	85	8	03	803-05		187			

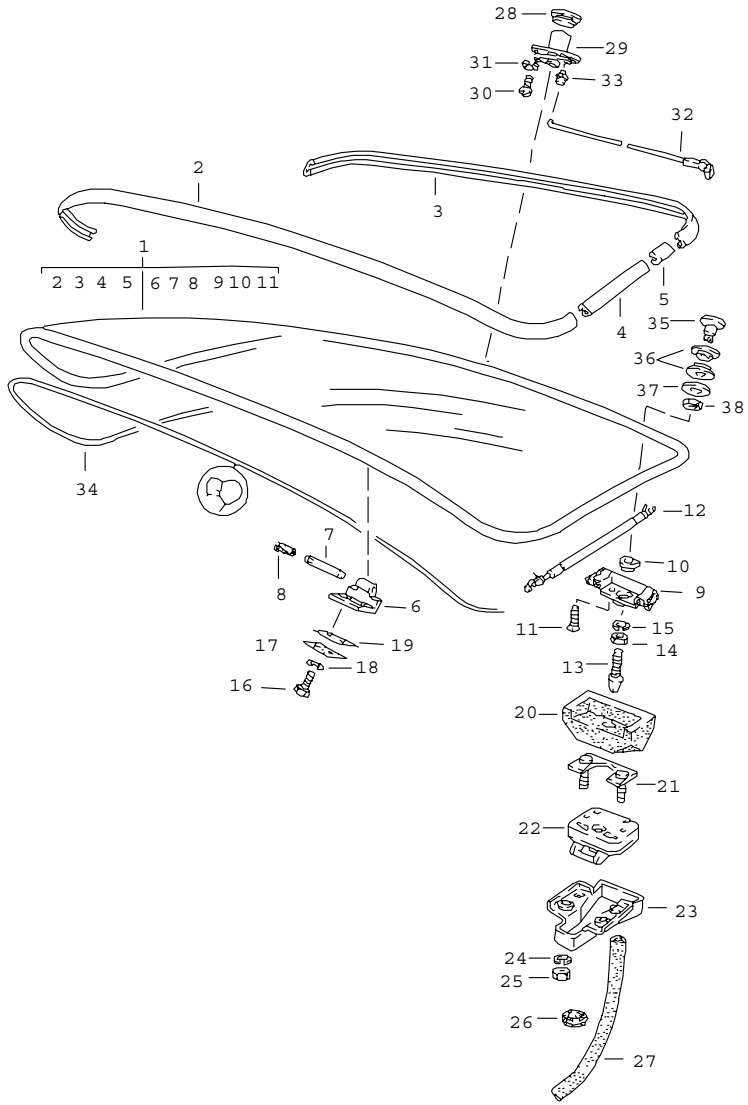

Pos	Part Number	Name	Remarks	Qty	Model
		rear lid without spoiler			+924
1	477 827 027 G	rear lid with moulding without M 425 see group 8/03/10 use also: POSITION 35 - POSITION 38 F >>92FN4 00898		1	M 425
1	944 512 027 02	rear lid with moulding ---------- rear lid together with wiper motor see group 9/04/05 ---------- F 92FN4 00899>>		1	
2	477 853 313	trim frame		1	
3	477 853 311	trim frame		1	
4	477 853 315	trim frame	/L	1	
(4)	477 853 316	trim frame	/R	1	
5	477 853 367	sleeve		4	
6	477 827 305 B	hinge half		2	
7	A 944 512 311 00	hinge pin		2	
7	944 512 311 00	hinge pin		2	
8	477 827 441	bush		2	
9	477 827 033	housing F >>92FN4 00898	/L	1	
9	944 512 033 01	housing F 92FN4 00899>>	/L	1	
(9)	477 827 034	housing F >>92FN4 00898	/R	1	
(9)	944 512 034 01	housing F 92FN4 00899>>	/R	1	

Pos	Part Number	Name	Remarks	Qty	Model
10	477 827 035	rubber mounting		2	
11	999 219 011 07	countersunk-head screw M 6 X 16		4	
12	477 827 348 F	gas-filled strut	/R	1	
(12)	477 827 349 D	gas-filled strut	/L	1	
13	477 827 527	lock pin F >>92FN4 00898		2	
13	944 538 547 00	lock pin F 92FN4 00899>>		2	
14	N 011 008 8	hexagon nut M 8		2	
15	900 027 015 02	lock ring B 8		2	
16	999 218 045 07	pan-head screw M 8 X 12		4	
17	928 512 417 03	plate		2	
19	944 512 413 00	gasket lid hinge		2	
20	477 827 365 A	gasket F >>92FN4 00898	/L	1	
20	944 512 365 01	gasket F 92FN4 00899>>	/L	1	
(20)	477 827 366 A	gasket F >>92FN4 00898	/R	1	
(20)	944 512 366 01	gasket F 92FN4 00899>>	/R	1	
21	951 512 447 00	reinforcement plate		2	
22	477 827 505 A	rear lid lock F >>92FN4 00898	/L	1	
22	944 538 955 01	rear lid lock F 92FN4 00899>>	/L	1	
(22)	477 827 506 A	rear lid lock F >>92FN4 00898	/R	1	
(22)	944 538 956 01	rear lid lock F 92FN4 00899>>	/R	1	
23	477 827 541	water drip pan		2	
24	N 012 006 4	lock ring B 6		4	
25	900 076 010 02	hexagon nut M 6		4	
26	111 971 911 A	rubber sleeve		2	
27	477 827 547	hose 400 MM		2	
28	477 827 529 A	sealing ring		1	
29	477 898 082	lock cylinder w/o stipulated lock number		1	
(29)	477 827 573 B	lock cylinder with stipulated lock-no.		1	
30	N 014 139 5	oval-head screw M 6 X 12		2	
31	N 012 007 02	lock ring A 6		2	
32	477 827 583	pull rod		2	
33	993 531 563 00	linkage clip		2	
34	944 512 043 00	seal for rear flap		1	
-	999 591 342 02	u-clamp		4	
		- -- E N D -- -			

Model	Year	MG	SG	Illustration	Restrictions	Update	12:45	06.04.2005	PORSCHE	PET	PORSCHE
924	85	8	03	803-10		187					

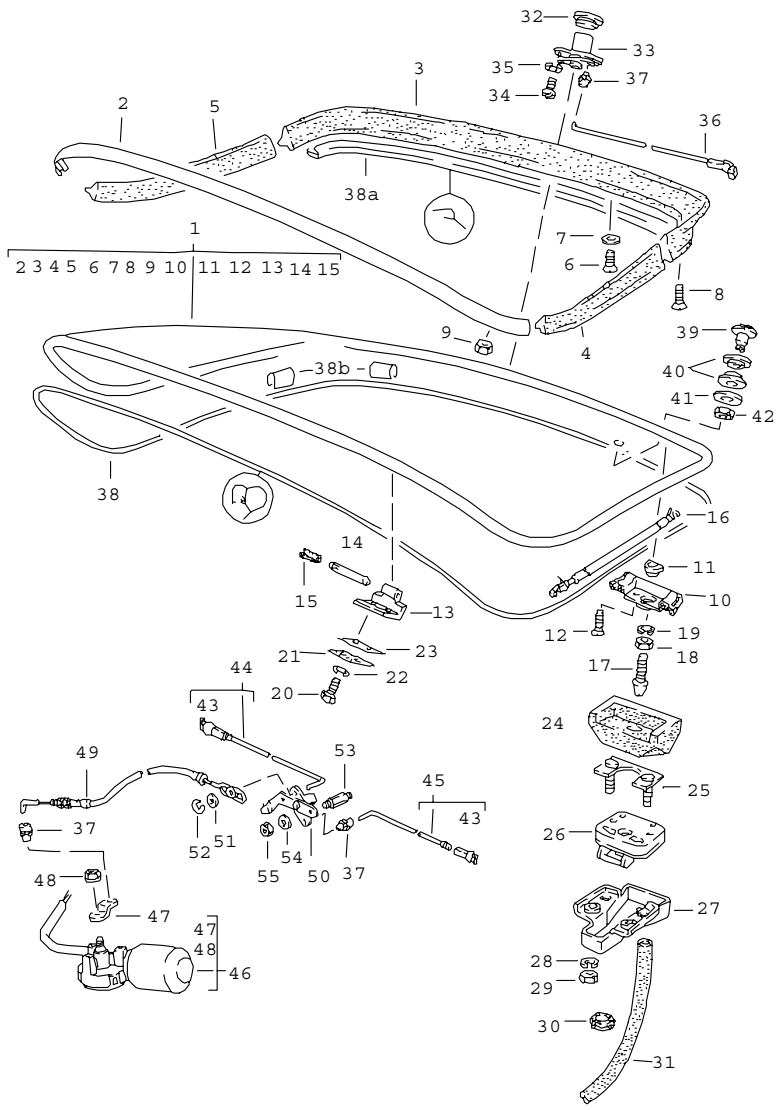

Pos	Part Number	Name	Remarks	Qty	Model
		rear lid with rear spoiler			
1	477 827 027 K	rear lid F >>92FN4 00898		1	
1	944 512 027 00	rear lid F 92FN4 00899>>		1	
(1)	477 827 027 J	rear lid		1	GT
2	477 853 313 A	trim frame ---------- rear lid together with wiper motor see group 9/04/05 ----------		1	
3	477 827 555	rear spoiler centre		1	
(3)	937 512 555 00	rear spoiler		1	GT
	TPP	centre			
4	477 827 557	rear spoiler lateral	/L	1	
(4)	937 512 557 00	rear spoiler	/L	1	GT
	TPP	lateral			
5	477 827 558	rear spoiler	/R	1	
(5)	937 512 558 00	rear spoiler	/R	1	GT
	TPP	lateral			
6	N 033 183 1	countersunk-head screw M 5 X 20		7	
7	477 827 453 A	washer		7	
8	N 033 185 1	countersunk-head screw M 4 X 16		2	
9	N 021 255 1	slotted nut M 4		12	
10	477 827 033	housing F >>92CN4 02197 F >>93CN1 00305	/L	1	924 TURBO

Pos	Part Number	Name	Remarks	Qty	Model
10	477 827 033 A	housing F 92CN4 02198>> F 93CN1 00306>> F >>92FN4 00898	/L	1	924 TURBO
10	944 512 033 01	housing F 92FN4 00899>>	/L	1	
(10)	477 827 034	housing F >>92CN4 02197 F >>93CN1 00305	/R	1	924 TURBO
(10)	477 827 034 A	housing F 92CN4 02198>> F 93CN1 00306>> F >>92FN4 00898	/R	1	924 TURBO
10	944 512 034 01	housing F 92FN4 00899>>	/R	1	
11	477 827 035	rubber mounting		2	
12	999 219 011 07	countersunk-head screw		4	
13	477 827 305 B	hinge half		2	
14	944 512 311 00	hinge pin		2	
15	477 827 441	bush		2	
(16)	477 827 348 F	gas-filled strut	/R	1	
16	477 827 349 D	gas-filled strut	/L	1	
17	477 827 527	lock pin F >>92FN4 00898		2	
17	944 538 547 00	lock pin F 92FN4 00899>>		2	
18	N 011 008 8	hexagon nut M 8		2	
19	900 027 015 02	lock ring B 8		2	
20	999 218 045 07	pan-head screw M 8 X 12		4	
21	928 512 417 03	plate		2	
23	944 512 413 00	gasket lid hinge		2	
24	477 827 365 A	gasket F >>92FN4 00898	/L	1	924
(24)	477 827 365 D	gasket	/L -84	1	TURBO,GT
24	944 512 365 01	gasket F 92FN4 00899>>	/L	1	
(24)	477 827 366 A	gasket F >>92FN4 00898	/R	1	924
(24)	477 827 366 D	gasket	/R -84	1	TURBO,GT
(24)	944 512 366 01	gasket F 92FN4 00899>>	/R	1	
25	951 512 447 00	reinforcement plate		2	
26	477 827 505 A	rear lid lock F >>92FN4 00898	/L	1	
26	944 538 955 01	rear lid lock F 92FN4 00899>>	/L	1	
(26)	477 827 506 A	rear lid lock F >>92FN4 00898	/R	1	
(26)	944 538 956 01	rear lid lock F 92FN4 00899>>	/R	1	
27	477 827 541	water drip pan		2	
28	N 012 006 4	lock ring B 6		4	
29	900 076 010 02	hexagon nut M 6		4	
30	111 971 911 A	rubber sleeve		2	
31	477 827 547	hose 400 MM		2	
32	477 827 529 A	sealing ring		1	
33	477 898 082	lock cylinder w/o stipulated lock number		1	
(33)	477 827 573 B	lock cylinder with stipulated lock-no.		1	
34	N 014 139 5	oval-head screw M 6 X 12		2	
35	N 012 007 02	lock ring A 6		2	
36	477 827 583	pull rod	-83	2	
37	993 531 563 00	linkage clip		2	
38	944 512 043 00	seal for rear flap		1	

Pos	Part Number	Name	Remarks	Qty	Model
38A	944 512 463 00	additional gasket		1	
38B	999 591 342 02	u-clamp		4	
39	477 845 333	screw plug		1	
40	477 955 439	grommet		2	
41	477 845 331	washer		1	
42	N 011 118 14	hexagon nut M 8		1	
43	N 015 704 1	ball socket	84-	1	
44	944 512 092 01	pull rod	/R 84-	1	
45	944 512 091 00	pull rod	/L 84-	1	
46	944 624 024 01	electric motor see technical information GR.5,NR.1/93	84-	1	
47	944 624 824 00	lever	84-	1	
48	E 999 084 045 02	lock nut	84-	1	
49	944 512 097 02	bowden cable	84-	1	
50	944 512 095 00	lever	84-	1	
51	999 704 104 50	rubber washer	84-	1	
52	N 012 054 2	clamping washer	84-	1	
53	944 512 201 00	stud	84-	2	
54	N 011 524 7	washer B 6	84-	2	
55	900 076 010 02	hexagon nut M 6	84-	2	
		- -- E N D -- -			

Pos	Part Number	Name	Remarks	Qty	Model

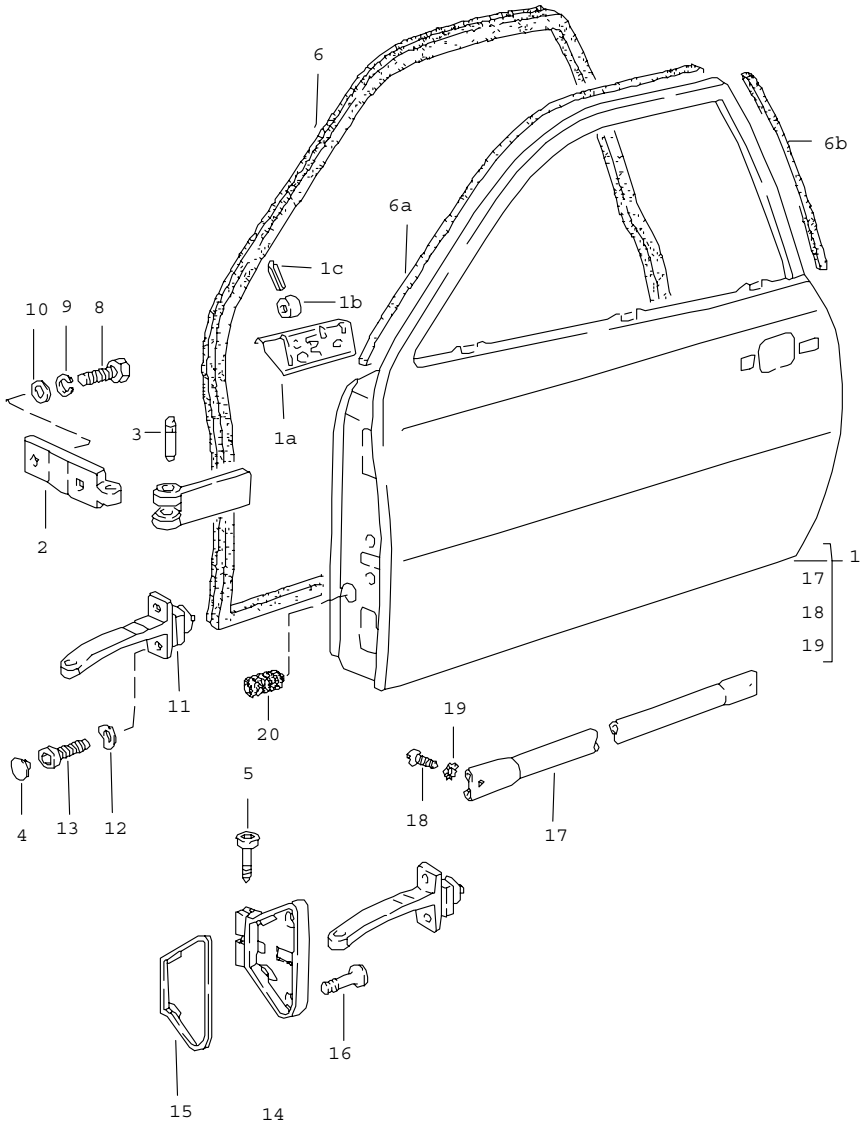

Pos	Part Number	Name	Remarks	Qty	Model
		door			
1	477 831 051 AA	door in white prepared for door mirror	/L	1	
1	478 831 051 R	door in white not prepared for door mirror	/RL/L	1	
(1)	478 831 052 R	door in white prepared for door mirror	/R	1	
(1)	477 831 052 AA	door in white not prepared for door mirror	/R	1	
1A	477 831 139 C	reinforcement door mirror	/L	1	
(1A)	477 831 140 C	reinforcement door mirror	/R	1	
1B	928 531 235 03	threaded piece		2	
1C	N 013 295 1	tensioning sleeve		2	
2	171 831 403	hinge half		4	
3	321 831 421	hinge pin		4	
5	928 537 419 03	pan-head screw		2	
6	944 537 091 00	door seal	/L	1	
(6)	944 537 092 00	door seal	/R	1	
6A	477 837 233	additional gasket F >>92CN4 01894 F >>93CN1 00246 F >>93CN1 00246		2	 924 TURBO TURBO (J)
6B	477 837 235	additional gasket F >>92CN4 01894 F >>93CN1 00246		2	 924 TURBO
8	900 119 052 02	pan-head screw M 8 X 15		8	
9	900 027 015 02	lock ring B 8		8	
10	823 711 815	washer		8	
11	944 537 609 00	door support		2	
11	944 537 609 00	door support		2	

Pos	Part Number	Name	Remarks	Qty	Model
12	N 011 524 7	washer B 6		4	
13	900 067 009 02	pan-head screw M 6 X 15		4	
14	928 537 417 02	bearing bracket	/L	1	
(14)	928 537 418 02	bearing bracket	/R	1	
15	928 537 425 02	desk pad	/L	1	
(15)	928 537 426 02	desk pad	/R	1	
16	928 537 459 02	oval-head screw M 6 X 20		4	
17	477 831 155	reinforcement		2	M 190
18	E 999 147 006 02	oval-head screw M 8 X 16		4	M 190
19	E N 012 133 1	shake-proof washer V 8,4		4	M 190
20	477 971 910	bellows		2	
		- -- E N D -- -			

Pos	Part Number	Name	Remarks	Qty	Model

Model	Year	MG	SG	Illustration	Restrictions	Update	12:45	06.04.2005	PORSCHE PET PORSCHE
924	85	8	04	804-05		187			

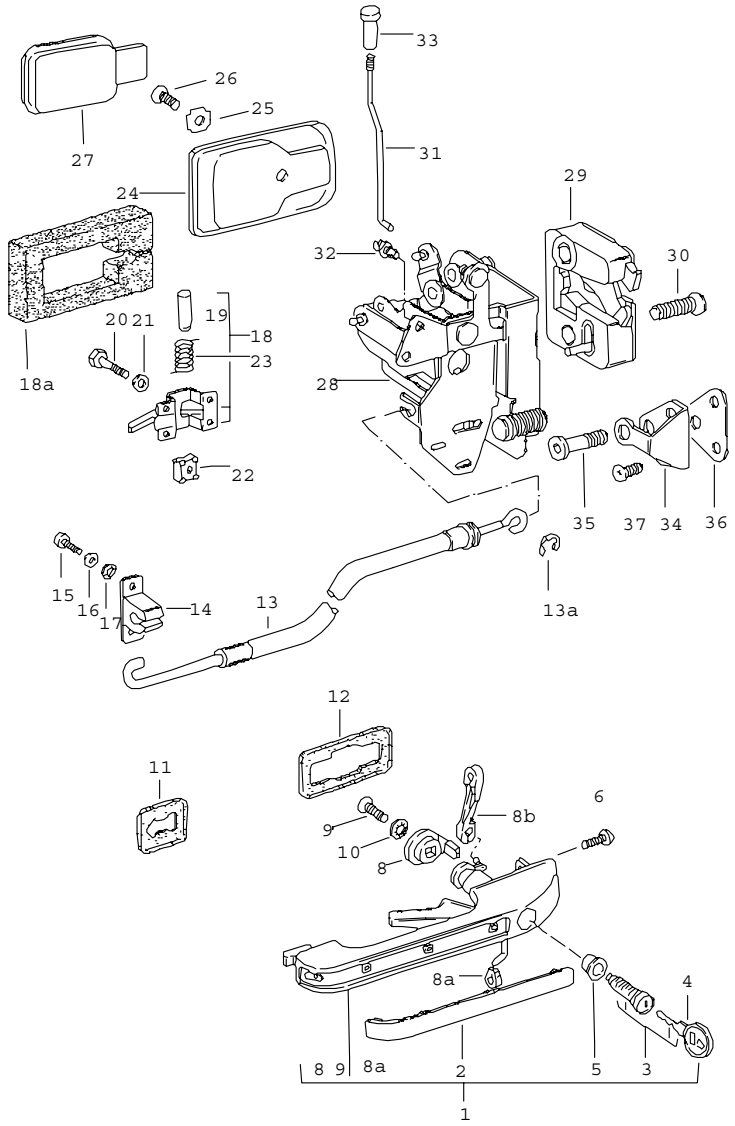

Pos	Part Number	Name	Remarks	Qty	Model
		door handle door lock			
1	477 837 037 H	outer door handle	/L	1	
(1)	477 837 038 H	outer door handle	/R	1	
2	823 837 239	cover		2	
3	944 538 903 00	lock cylinder w/o stipulated lock number		2	
(3)	944 538 903 01	lock cylinder with stipulated lock-no.		2	
-	-	grease for lock cylinder see group 0/05/00			
4	477 837 219	blank key		2	
(4)	944 538 933 00	key with stipulated lock-no.		1	
5	111 837 227 B	sealing ring		2	
6	803 837 951	self-lock. fillister screw		2	
8	477 837 497	driver		2	
8A	999 168 004 40	ball socket		2	
8BA	477 837 505 A	connecting piece	/L -82	1	
8B	477 837 505 A	connecting piece	/L	1	
(8B)	477 837 506 A	connecting piece	/R	1	
9	N 033 165 1	countersunk-head screw AM 4 X 8		2	
10	N 012 116 1	serrated lock washer V 4,3		2	
11	867 837 209	desk pad	/V	2	
12	171 837 211 A	desk pad	/H	2	
13	477 837 017 A	bowden cable		2	
13A	900 116 002 02	lock washer 3,2		2	
14	477 837 115 A	support		2	
15	N 014 139 7	oval-head screw M 6 X 12		4	

Pos	Part Number	Name	Remarks	Qty	Model
16	N 011 524 7	washer A 6,4		4	
17	N 011 524 7	washer B 6		4	
18	171 837 019	inner door release	/L	1	
(18)	171 837 020	inner door release	/R	1	
	041	black			
	90V	brown			
18A	477 831 304 A	seal		2	
19	N 013 666 1	rivet B 4 X 32		2	
20	N 010 210 13	hexagon-head bolt M 6 X 10		8	
21	111 837 941	cup spring 6,4 X 12,5		8	
22	477 837 521	captive nut M 6		8	
23	811 837 723	spring inner door release		2	
24	171 837 235	rose		2	
	01C	black			
	90V	brown			
25	111 837 291	cone washer		2	
26	N 014 216 1	countersunk-head screw AM 5 X 10		2	
27	311 837 247	cup		2	
	043	black			
	90V	brown			
28	928 537 907 03	lock inner part	/LL/L	1	
(28)	928 537 908 04	lock inner part	/LL/R	1	
(28)	927 537 907 04	lock inner part	/RL/L	1	
(28)	927 537 908 03	lock inner part	/RL/R	1	
29	928 537 153 03	door lock outer part	/L	1	
(29)	928 537 154 03	door lock outer part	/R	1	
30	928 537 721 02	oval-head screw M 8 X 35		4	
31	477 837 183 A	locking rod		2	
32	477 837 187	clip		2	
33	111 837 187 B	knob		2	
	043	black			
34	928 537 133 02	door lock striker		2	
35	928 537 131 03	lock pin		2	
36	928 537 135 04	desk pad		2	
37	900 269 027 02	countersunk-head screw M 8 X 16		4	
		- -- E N D -- -			

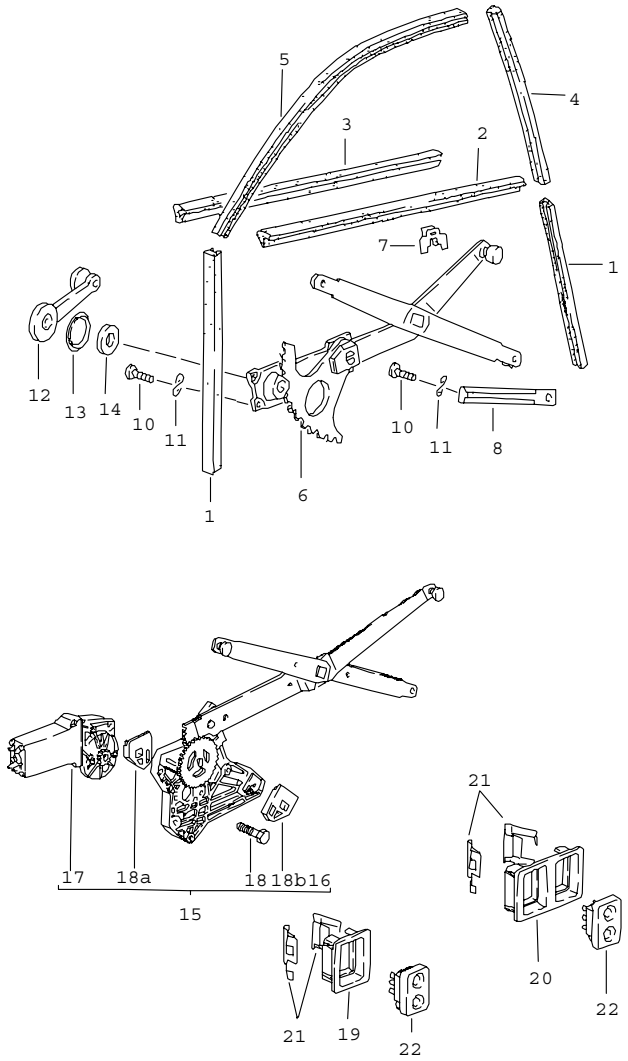

Pos	Part Number	Name	Remarks	Qty	Model
		window guide power windows			
1	477 837 385	window guide lower		4	
2	477 837 469 A	sealing outer	/L	1	
(2)	477 837 470 A	sealing outer	/R	1	
3	477 837 471 A	seal inner		2	
4	477 837 479 A	window guide		2	
5	477 837 493 A	window guide upper	/L	1	
(5)	477 837 494 A	window guide upper	/R	1	
(6)	477 837 441 A	power windows	/L	1	
(6)	477 837 442 A	power windows	/R	1	
7	171 837 485	clamp		10	
8	477 837 589	guide rail		2	
10	999 217 029 02	hexagon-head bolt M 6 X 10, SELBSTSICHERND		12	
11	N 011 652 1	washer 7 X 12		12	
12	321 837 581	window crank		2	
	01C	black			
	90V	brown			
13	111 837 595 A	desk pad		2	
	01C	black			
	90V	brown			
14	411 837 447	gasket		2	
16	477 837 391 C	cross-arm power window	/L	1	
(16)	477 837 392 C	cross-arm power window	/R	1	
17	477 959 123 A	engine and transmission	/L	1	

Pos	Part Number	Name	Remarks	Qty	Model
(17)	477 959 124 A	engine and transmission	/R	1	
18	N 014 228 4	countersunk-head screw AM 6 X 12		6	
18A	477 837 397	stop upper	/L	1	
18B	477 837 398	stop	/R	1	
18A	477 837 397	stop lower	/R	1	
18B	477 837 398	stop	/L	1	
19	477 867 185	mounting piece		1	
	01C	black			
	89S	brown			
20	477 867 187	mounting piece		1	
	01C	black			
	89S	brown			
21	477 867 189	spring clamp		4	
22	477 959 622	tip switch		3	
	01C	black			
	89S	brown			
-	477 971 160 A	harness dashboard	/LL -83	1	
-	944 612 031 00	harness dashboard	/LL 84-	1	
-	945 612 031 00	harness dashboard	/RL -83	1	
-	945 612 031 00	harness dashboard	/RL 84-	1	
-	477 971 161	harness driver's door		1	
-	477 971 162	harness passenger's door		1	
-	321 919 505	relay	-83	1	
-	944 615 112 01	relay	84-	1	

Pos	Part Number	Name	Remarks	Qty	Model
-	N 017 121 5	safety fuse 25 A		1	
		- -- E N D -- -			

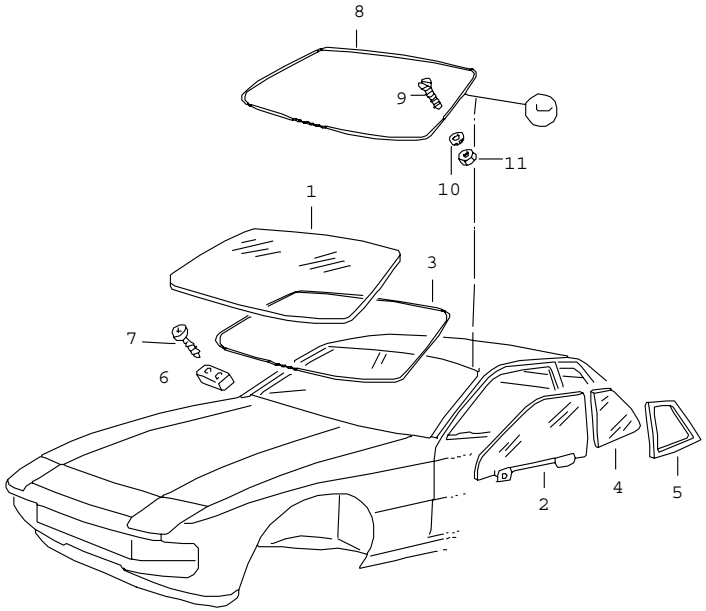

Pos	Part Number	Name	Remarks	Qty	Model
		windows			
1	477 845 011 D	windscreen clear		1	
(1)	477 845 011 E	windscreen tinted		1	
(1)	477 845 011 F	windscreen tinted upper part: dark green		1	
-	477 845 043	adhesive plate interior mirror		1	
2	A 477 845 023 B	door glass clear	/L	1	
2	E 944 542 023 00	door glass clear	/L	1	
(2)	944 542 023 01	door glass tinted	/L	1	
(2)	944 542 024 00	door glass clear	/R	1	
(2)	944 542 024 01	door glass tinted	/R	1	
3	477 898 011 A	sealing set windscreen		1	
4	477 845 311	side window clear	/L	1	
(4)	477 845 311 A	side window tinted	/L	1	
(4)	477 845 312	side window clear	/R	1	
(4)	477 845 312 A	side window tinted	/R	1	
5	944 557 321 00	rubber seal side window	/L	1	
(5)	944 557 322 00	rubber seal side window	/R	1	
6	477 845 613 A	stop		2	
7	900 143 046 07	tapping screw B 4,8 X 16		4	924,TURBO
(7)	900 143 088 07	tapping screw B 4,8 X 32		4	GT

Pos	Part Number	Name	Remarks	Qty	Model	Pos	Part Number	Name	Remarks	Qty	Model
8	E 937 559 031 01	frame 3-part		1	GT						
9	900 269 044 02	countersunk-head screw M 4 X 16		10	GT						
10	900 025 002 02	washer A 4,3		10	GT						
11	N 011 004 6	hexagon nut M 4		10	GT						
		- -- E N D -- -									

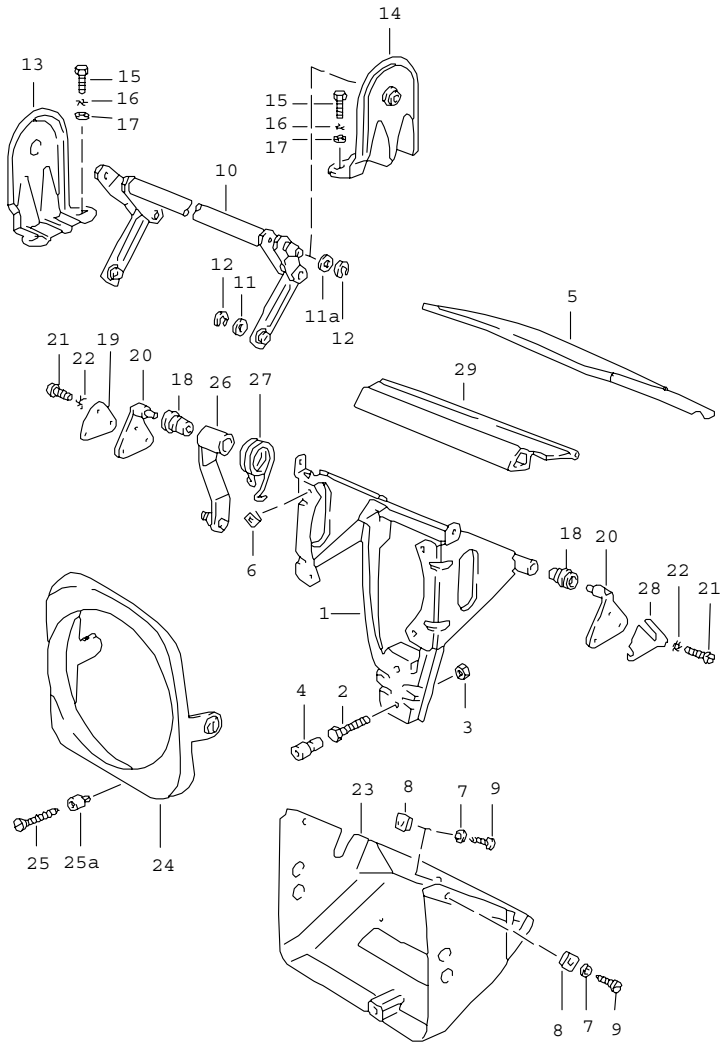

Pos	Part Number	Name	Remarks	Qty	Model
		pop-up headlight			
1	944 750 605 00	swivel frame	/L	1	
(1)	944 750 606 00	swivel frame	/R	1	
2	N 010 221 3	hexagon-head bolt M 6 X 35		2	
3	900 076 010 02	hexagon nut M 6		2	
4	914 504 319 00	grommet		2	
5	477 805 611	housing cover	/L	1	
(5)	477 805 612	housing cover	/R	1	
6	999 507 252 02	nut B 3,9 X 16,5		8	
7	900 151 028 02	washer 4,1		4	
8	N 015 438 1	speed nut B 3,5 X 16,5		10	
9	N 014 086 4	tapping screw B 3,5 X 9,13		10	
10	477 805 615	control shaft		1	924
(10)	477 805 615	control shaft		1	TURBO,GT
11	N 011 525 13	washer		2	
11A	477 805 695	washer		1	
12	N 012 436 2	lock washer 6		3	
13	477 805 617	bearing bracket		1	
14	477 805 622	bearing bracket		1	
15	N 010 215 13	hexagon-head bolt M 6 X 15		4	
16	N 012 105 3	serrated lock washer A 6,4		4	
17	N 011 524 7	washer A 6,4		4	
18	477 805 623	bush		4	
19	914 750 169 10	plate		4	

Pos	Part Number	Name	Remarks	Qty	Model	Pos	Part Number	Name	Remarks	Qty	Model
20	914 750 271 10	bearing bracket		4							
21	N 010 210 7	hexagon-head bolt M 6 X 10		12							
22	N 012 105 3	serrated lock washer A 6,4		12							
23	944 750 631 00	housing	/L	1							
(23)	944 750 632 00	housing	/R	1							
24	477 805 633	retaining ring	/L	1							
(24)	477 805 634	retaining ring	/R	1							
25	N 043 979 2	tapping screw BZ 4,2 X 45		2							
25A	477 857 173	clip		2							
26	477 805 651	lever		2							
27	477 805 661	spring	/L	1							
(27)	477 805 662	spring	/R	1							
28	477 805 663	desk pad		X							
29	477 853 363	cover strip	/L	1							
(29)	477 853 364	cover strip	/R	1							
		- -- E N D -- -									

Model	Year	MG	SG	Illustration	Restrictions	Update	12:46	06.04.2005	PORSCHE PET PORSCHE
924	85	8	07	807-00		187			

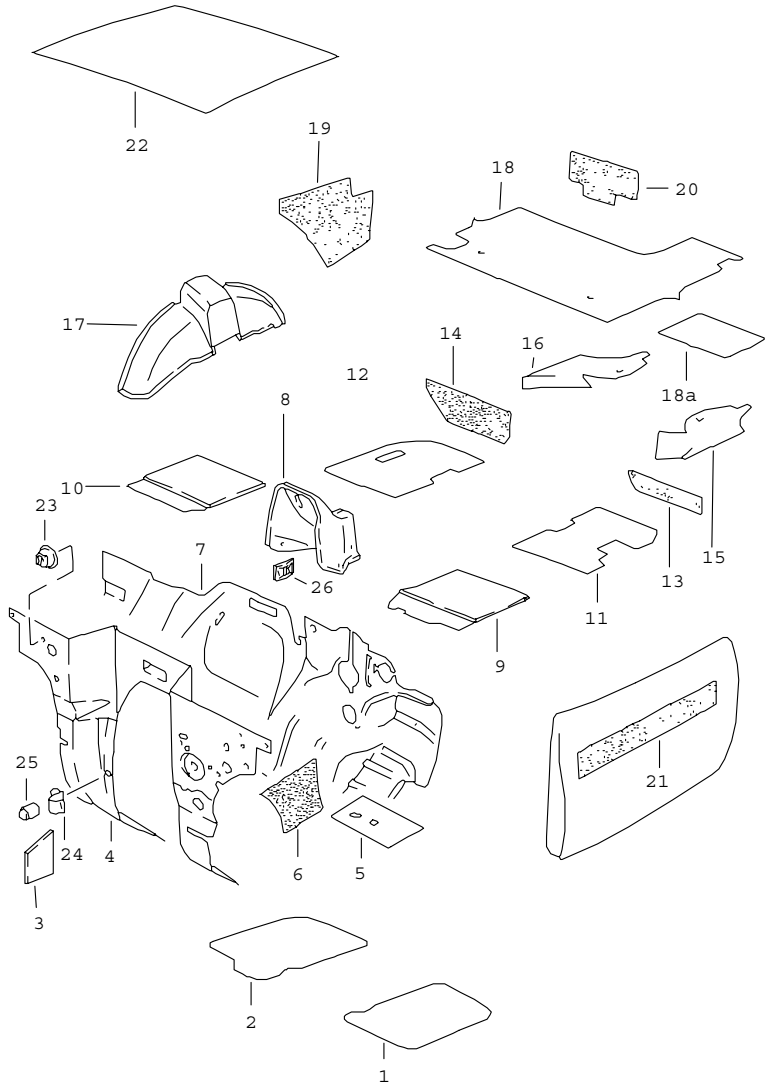

Pos	Part Number	Name	Remarks	Qty	Model
		body sound proofing 1			
1	477 863 771	sound absorber cover	/L	1	
2	477 863 772	sound absorber cover	/R	1	924
(2)	477 863 772 A	sound absorber cover	/R	1	TURBO
(2)	E 937 556 891 00	sound absorber cover	/R	1	GT
3	477 863 871	heat protection side member	/R	1	
(4)	944 556 089 00	insulation pour engine compartment	/LL	1	
(4)	478 863 831	insulation pour engine compartment F >>92CN4 02197	/RL	1	924
(4)	E 945 556 089 01	insulation pour engine compartment	/RL	1	924
(4)	478 863 831 B	insulation pour engine compartment F >>93CN1 00305 F >>93BN7 00450	/RL	1	TURBO/GT
(4)	E 945 556 089 01	insulation pour engine compartment	/RL	1	TURBO
5	477 863 849	insulation water drip pan	/L/V	1	
6	477 863 837	sound absorber side section	/L -83	1	
(6)	477 863 838	sound absorber side section	/R -83	1	
(6)	944 556 083 00	sound absorber side section	/LL/L84-	1	
(6)	E 944 556 084 00	sound absorber side section	/LL/R84-	1	
(6)	E 945 556 083 00	sound absorber side section	/RL/L84-	1	
(6)	945 556 084 00	sound absorber side section	/RL/R84-	1	

Pos	Part Number	Name	Remarks	Qty	Model
7	E 477 863 855	insulation firewall F >>92BN4 02267 F >>93BN1 00360	/LL	1	924/TURBO 924 TURBO
7	E 477 863 855 E	insulation firewall F 92BN4 02268>>92CN4 02197 F 93BN1 00361>>93CN1 00305 F 93BN7 00001>>93BN7 00450	/LL	1	 924 TURBO GT
7	E 477 863 855 E	insulation firewall F 92CN4 02198>> F 93CN1 00306>>	/LL	1	 924 TURBO
7	477 863 855 F	insulation firewall	/LL	1	M 573
8	E 477 863 667 A	sound absorber	/V	1	
9	477 863 775	sound absorber floor	/LL/L	1	
(9)	478 863 775	sound absorber floor	/RL/L	1	
10	477 863 776	sound absorber floor	/LL/R	1	
(10)	478 863 776	sound absorber floor	/RL/R	1	
11	477 863 773	sound absorber floor	/L	1	
12	477 863 774	sound absorber floor	/R	1	
13	944 556 085 00	sound absorber cross member	/L	1	
(13)	944 556 086 00	sound absorber cross member	/R	1	
14	477 863 845 A	sound absorber heel plate	/L	1	
(14)	477 863 846 A	sound absorber heel plate	/R	1	
15	944 556 777 01	sound absorber	/L	1	
16	944 556 778 01	sound absorber bracket	/R	1	
(17)	477 863 885	insulation wheel housing F >>92CN4 02197 F >>93CN1 00305 F >>93BN7 00450	/L	1	 924 TURBO GT
(17)	944 556 885 00	sound absorber wheel housing F 92CN4 02198>> F 93CN1 00306>>	/L	1	 924 TURBO
(17)	477 863 886	sound absorber wheel housing F >>92CN4 02197 F >>93CN1 00305 F >>93BN7 00450	/R	1	 924 TURBO GT
17	944 556 886 00	sound absorber wheel housing F 92CN4 02198>> F 93CN1 00306>>	/R	1	 924 TURBO
(18)	477 863 799	sound absorber boot floor plate F >>92CN4 02197 F >>93CN1 00305 F >>93BN7 00450		1	 924 TURBO GT
18	944 556 079 00	sound absorber boot floor plate F 92CN4 02198>> F 93CN1 00306>>		1	 924 TURBO
18A	477 863 893 A	sound absorber boot floor plate		1	
19	477 863 865	sound absorber side section	/L	1	924/TURBO
(19)	937 556 865 00	sound absorber side section	/L	1	GT
(19)	477 863 866	sound absorber side section	/R	1	924/TURBO
(19)	937 556 866 00	sound absorber side section	/R	1	GT
20	477 863 867	insulation spare-wheel well		1	
21	993 556 521 00	insulation door		2	
22	944 556 609 00	sound absorber roof		1	
23	999 049 002 40	push button	82-	13	

Pos	Part Number	Name	Remarks	Qty	Model	Pos	Part Number	Name	Remarks	Qty	Model
24	944 556 849 00	clip	82-	6							
25	999 049 001 40	plastic nut	82-	6							
26	N 900 661 01	clamping washer		5							
		- -- E N D -- -									

Model	Year	MG	SG	Illustration	Restrictions	Update	12:47	06.04.2005	PORSCHE	PET	PORSCHE
924	85	8	07	807-01		187					

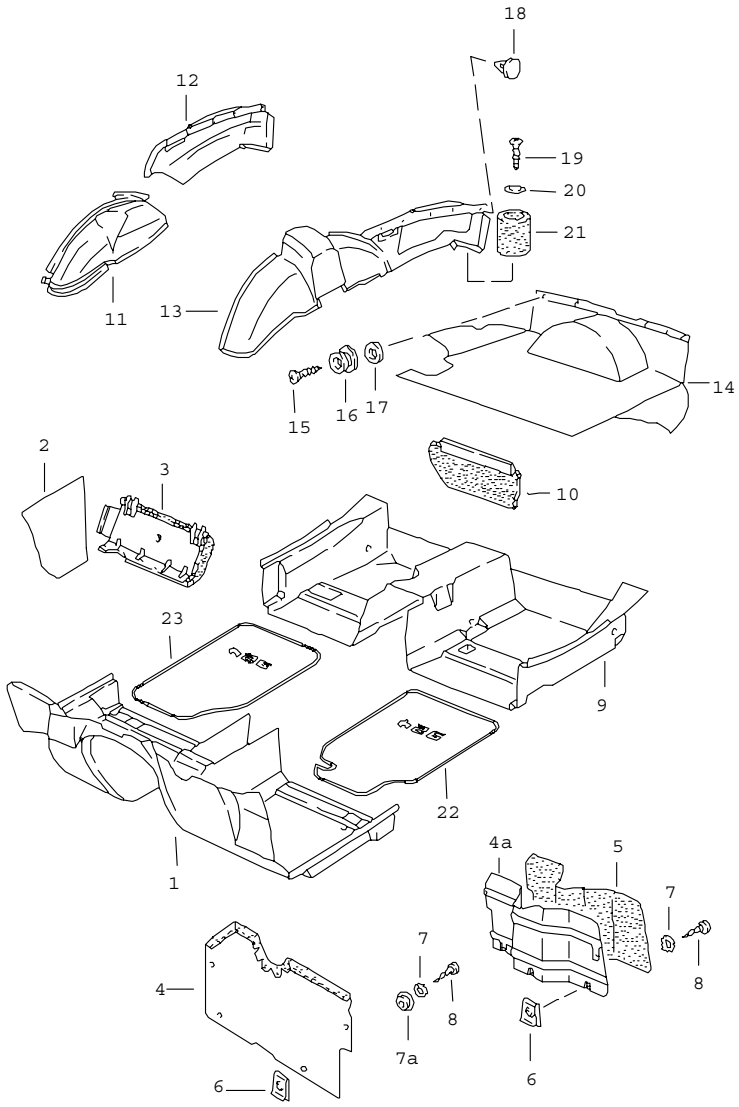

Pos	Part Number	Name	Remarks	Qty	Model
		linings			
		F >>92CN4 06384 F >>93CN1 00861			924 TURBO
1	477 863 703 E	floor mat	/LL/V-80	1	924
	43S	black			
	83S	beige			
	87S	brown			
(1)	477 863 703 G	floor mat	/LL/V-80 81-	1	TURBO 924:M 603 924
	43S	black			
	83S	beige			
	87S	brown			
(1)	477 863 703 L	floor mat	/LL/V-80	1	924:M 573
	43S	black			
	83S	beige			
	87S	brown			
(1)	477 863 703 M	floor mat	/LL/V 81-	1	TURBO:M 573 924: M 573
	43S	black			
	83S	beige			
	87S	brown			
	8BR	grey	82		
(1)	478 863 703 C	floor mat	/RL/V-80	1	924
	43S	black			
	83S	beige			
	87S	brown			
(1)	478 863 703 G	floor mat	/RL/V -80 81-	1	TURBO 924:M 603 924
	43S	black			
	83S	beige			

Pos	Part Number	Name	Remarks	Qty	Model
	87S	brown			
	8BR	grey	82		
2	477 863 581 A	lining lateral	/L	1	
	43S	black			
	83S	beige			
	87S	brown			
	8BR	grey	82		
(2)	477 863 582 A	lining lateral	/R	1	
	43S	black			
	83S	beige			
	87S	brown			
	8BR	grey	82		
(2)	477 863 582 B	lining lateral	/LL/R	1	M 573 (J)
	43S	black			
	83S	beige			
	87S	brown			
	8BR	grey	82		
-	478 863 767	carpet foot support	/RL/R	1	
	43S	black			
	83S	beige			
	87S	brown			
	8BR	grey	82		
-	478 863 767 A	carpet foot support	/RL/R	1	924 AUT.
	43S	black			
	83S	beige			
	87S	brown			
	8BR	grey	82		
3	477 820 412	knee protection trim	/LL	1	M 573
	05T	black			
	21S	brown			
4	478 863 711 A	foot support F >>92A04 11805 F >>93A01 40313	/RL/L	1	M 573
	43S	black			
	83S	beige			
	87S	brown			
4A	478 863 751	foot support F 92A04 11806>> F 93A01 40314>>	/RL/L	1	M 573
5	478 863 381	carpet foot support F 92A04 11806>> F 93A01 40314>>	/RL/L	1	M 573
	43S	black			
	83S	beige			
	87S	brown			
	8BR	grey	82		
6	N 015 458 1	speed nut	/RL	5	M 573
7	N 012 130 2	shake-proof washer A 5,3 F >>92A04 11805 F >>93A01 40313	/RL	5	M 573
(7)	900 151 027 02	washer F 92A04 11806>> F 93A01 40314>>	/RL	5	M 573
8	N 013 968 7	tapping screw 4,8 X 13	/RL	5	M 573
9	477 863 717 A	floor mat	/LL/H-80	1	924
	43S	black			
	83S	beige			
	87S	brown			
(9)	477 863 717 B	floor mat	/LL/H -80 81-	1	TURBO 924:M 603 924

Pos	Part Number	Name	Remarks	Qty	Model
	43S	black			
	83S	beige			
	87S	brown			
	8BR	grey	82		
(9)	478 863 717 A	floor mat	/RL/H-80	1	924
	43S	black			
	83S	beige			
	87S	brown			
(9)	478 863 717 B	floor mat	/RL/H -80 81-	1	TURBO 924:M 603 924
	43S	black			
	83S	beige			
	87S	brown			
	8BR	grey	82		
(10)	477 863 571 A	lining heel plate	/L	1	
	43S	black			
	83S	beige			
	87S	brown			
	8BR	grey	82		
10	477 863 572 A	tension wire heel plate	/R	1	
	43S	black			
	83S	beige			
	87S	brown			
	8BR	grey	82		
(11)	A 477 863 067 A	side trim panel wheel housing	/L	1	
	43S	black			
	83S	beige			
	87S	brown			
	8BR	grey	82		
(11)	944 555 083 02	side trim panel wheel housing	/L	1	
	43S	black			
	83S	beige			
	87S	brown			
	8BR	grey	82		
11	A 477 863 068 B	side trim panel wheel housing	/L	1	
	43S	black			
	83S	beige			
	87S	brown			
	8BR	grey	82		
11	944 555 084 01	side trim panel F >>92CN4 02197 F >>93CN1 00305 F >>93BN7 00450 wheel housing	/L	1	924 TURBO GT
	43S	black			
	83S	beige			
	87S	brown			
	8BR	grey	82		
(12)	A 477 863 083 D	side trim panel	/L	1	
	43S	black			
	83S	beige			
	87S	brown			
	8BR	grey	82		
(12)	944 555 083 02	side trim panel	/L	1	
	43S	black			
	83S	beige			
	87S	brown			
	8BR	grey	82		

Pos	Part Number	Name	Remarks	Qty	Model
12	A 477 863 084 B	side trim panel	/R	1	
	43S	black			
	83S	beige			
	87S	brown			
	8BR	grey	82		
12	944 555 084 01	side trim panel F >>92CN4 02197 F >>93CN1 00305 F >>93BN7 00450	/R	1	924 TURBO GT
	43S	black			
	83S	beige			
	87S	brown			
	8BR	grey	82		
(13)	944 555 083 01	side trim panel	/L	1	
	43S	black			
	83S	beige			
	87S	brown			
13	944 555 084 01	side trim panel F 92CN4 02198>> F 93CN1 00306>>	/R	1	924 TURBO
	43S	black			
	83S	beige			
	87S	brown			
14	477 863 463 K	lining boot floor plate		1	924
	43S	black			
	83S	beige			
	87S	brown			
(14)	944 555 063 06	lining boot floor plate		1	924
	43S	black			
	83S	beige			
	87S	brown			
(14)	477 863 463 J	lining boot floor plate with collapsible tire F >>92CN4 02197 F >>93CN1 00305 F >>93BN7 00450		1	924 TURBO GT
	43S	black			
	83S	beige			
	87S	brown			
	8BR	grey	82		
(14)	944 555 063 01	boot floor lining boot floor plate with collapsible tire F 92CN4 02198>> F 93CN1 00306>>		1	924 TURBO
	43S	black			
	83S	beige			
	87S	brown			
15	N 013 957 5	tapping screw B 3,5 X 9,5		6	
16	968 555 901 00	set of fastening parts		6	
17	900 151 027 02	washer 5,3		6	
18	477 863 747	clip		12	
	01C	black			
	90V	brown			
	83S	beige			
19	900 143 064 07	tapping screw B 3,5 X 25		2	
20	N 011 521 3	washer A 3,7 X 8		2	
21	999 703 176 40	stop		2	
22	477 863 913	floor mat with logo	/LL/L	1	
	43S	black			
	87S	brown			

Pos	Part Number	Name	Remarks	Qty	Model	Pos	Part Number	Name	Remarks	Qty	Model
23	477 863 914	floor mat with logo	/LL/R	1							
	43S	black									
	87S	brown									
		- -- E N D -- -									

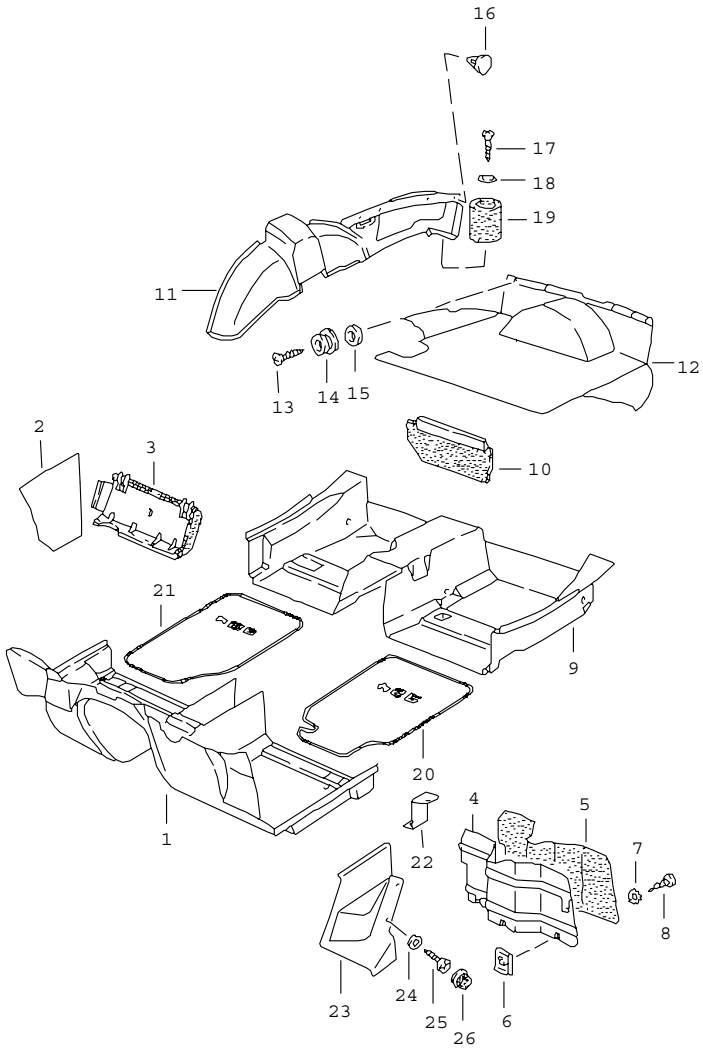

Pos	Part Number	Name	Remarks	Qty	Model
		linings			
		92 CN406385-- 93 CN100862--			924 TURBO
		92 CN407431-- 93 CN100933--			924 TURBO
		92 CN407431-- 93 CN100933--			924 TURBO
1	477 863 703 G	floor mat	/LL/V	1	
	3BF	black			
	1NF	beige	-82		
	8NF	brown			
	4BF	grey	83-		
	3FF	grey-beige	83-		
(1)	477 863 703 M	floor mat	/LL/V	1	M 573
	3BF	black			
	1NF	beige	-82		
	8NF	brown			
	4BF	grey	83-		
	3FF	grey-beige	83-		
(1)	478 863 703 G	floor mat	/RL/V	1	
	3BF	black			
	1NF	beige	-82		
	8NF	brown			
	4BF	grey	83-		
	3FF	grey-beige	83-		
(2)	477 863 581 A	lining lateral	/L -83	1	
	3BF	black			
	1NF	beige	-82		
	8NF	brown			
	4BF	grey	83-		

Pos	Part Number	Name	Remarks	Qty	Model
	3FF	grey-beige	83-		
2	477 863 582 A	lining lateral	/R	1	
	3BF	black			
	1NF	beige	-82		
	8NF	brown			
	4BF	grey	83-		
	3FF	grey-beige	83-		
(2)	477 863 582 B	lining lateral	/LL/R	1	M 573
	3BF	black			
	1NF	beige	-82		
	8NF	brown			
	4BF	grey	83-		
	3FF	grey-beige	83-		
(2)	945 555 081 00	lining	/L 84-	1	
	3BF	black			
	8NF	brown			
	4BF	grey			
	3FF	grey-beige			
-	478 863 767	carpet foot support	/RL/R	1	
	3BF	black			
	1NF	beige	-82		
	8NF	brown			
	4BF	grey	83-		
	3FF	grey-beige	83-		
-	478 863 767 A	carpet foot support	/RL/R	1	AUT.
	3BF	black			
	1NF	beige	-82		
	8NF	brown			
	4BF	grey	83-		
	3FF	grey-beige	83-		
3	477 820 412	knee protection trim	/LL	1	M 573
	05T	black	-82		
	21S	brown	-82		
	1DB	black	83-		
	4RB	brown	83-		
4	478 863 751	foot support	/RL/L	1	M 573
5	478 863 381	carpet foot support	/RL/L	1	M 573
	3BF	black			
	1NF	beige	-82		
	8NF	brown			
	4BF	grey	83-		
	3FF	grey-beige	83-		
6	N 015 458 1	speed nut	/RL	5	M 573
7	900 151 027 02	washer	/RL	5	M 573
8	N 013 968 7	tapping screw 4,8 X 13	/RL	5	M 573
9	477 863 717 B	floor mat	/LL/H	1	
	3BF	black			
	1NF	beige	-82		
	8NF	brown			
	4BF	grey	83-		
	3FF	grey-beige	83-		
(9)	478 863 717 B	floor mat	/RL/H	1	
	3BF	black			
	1NF	beige	-82		
	8NF	brown			

Pos	Part Number	Name	Remarks	Qty	Model
	4BF	grey	83-		
	3FF	grey-beige	83-		
(10)	477 863 571 A	lining heel plate	/L	1	
	3BF	black			
	1NF	beige	-82		
	8NF	brown			
	4BF	grey	83-		
	3FF	grey-beige	83-		
10	477 863 572 A	lining heel plate	/R	1	
	3BF	black			
	1NF	beige	-82		
	8NF	brown			
	4BF	grey	83-		
	3FF	grey-beige	83-		
(11)	944 555 083 01	side trim panel	/L -83	1	
	3BF	black			
	1NF	beige	-82		
	8NF	brown			
	4BF	grey	83-		
	3FF	grey-beige	83-		
11	944 555 084 01	side trim panel	/R	1	
	3BF	black			
	1NF	beige	-82		
	8NF	brown			
	4BF	grey	83-		
	3FF	grey-beige	83-		
11	944 555 083 02	side trim panel	/L 84-	1	
	3BF	black			
	4BF	grey			
	8NF	brown			
	3FF	grey-beige			
11	944 555 083 03	side trim panel	/L 84-	1	(AUS)
	3BF	black			
	4BF	grey			
	8NF	brown			
	3FF	grey-beige			
(11)	944 555 084 02	side trim panel	/R 84-	1	(AUS)
	3BF	black			
	4BF	grey			
	8NF	brown			
	3FF	grey-beige			
(12)	944 555 063 06	lining boot floor plate	-84	1	924
	3BF	black			
	4BF	grey			
	8NF	brown			
	3FF	grey-beige			
(12)	945 555 063 04	boot floor lining	85	1	
	3BF	black			
	4BF	grey			
	8NF	brown			
	3FF	grey-beige			
12	944 555 063 01	boot floor lining boot floor plate with collapsible tire	-83	1	
	3BF	black			
	1NF	beige	-82		
	8NF	brown			
	4BF	grey	83		

Pos	Part Number	Name	Remarks	Qty	Model
	3FF	grey-beige	83		
12	944 555 063 07	boot floor lining boot floor plate with collapsible tire	84	1	
	3BF	black			
	4BF	grey			
	8NF	brown			
	3FF	grey-beige			
(12)	944 555 063 03	boot floor lining with collapsible tire	85	1	
	3BF	black			
	4BF	grey			
	8NF	brown			
	3FF	grey-beige			
12	944 555 063 02	boot floor lining	83-	1	(GB)
	3BF	black			
	4BF	grey			
	8NF	brown			
	3FF	grey-beige			
13	N 013 957 5	tapping screw B 3,5 X 9,5		6	
14	968 555 901 00	set of fastening parts		6	
15	900 151 027 02	washer 5,3		6	
16	477 863 747	clip		12	
	01C	black			
	90V	brown			
	83S	beige	-82		
	4BF	grey	83-		
	3FF	grey-beige	83-		
17	900 143 064 07	tapping screw B 3,5 X 25		2	
18	N 011 521 3	washer A 3,7 X 8		2	
19	999 703 176 40	stop		2	
20	477 863 913	floor mat with logo 924	/LL/L	1	
	3BF	black			
	8NF	brown			
21	477 863 914	floor mat with logo 924	/LL/R	1	
	3BF	black			
	8NF	brown			
22	944 555 263 00	bracket	/LL	1	
(22)	945 555 263 00	bracket	/RL	1	
23	944 555 061 00	lining	/LL	1	
	01C	black			
24	900 151 028 02	washer 4,1 X 12 X 0,8		2	
25	999 450 003 02	tapping screw B 3,9 X 16		2	
26	311 867 169	cap		2	
	01C	black			
		- -- E N D -- -			

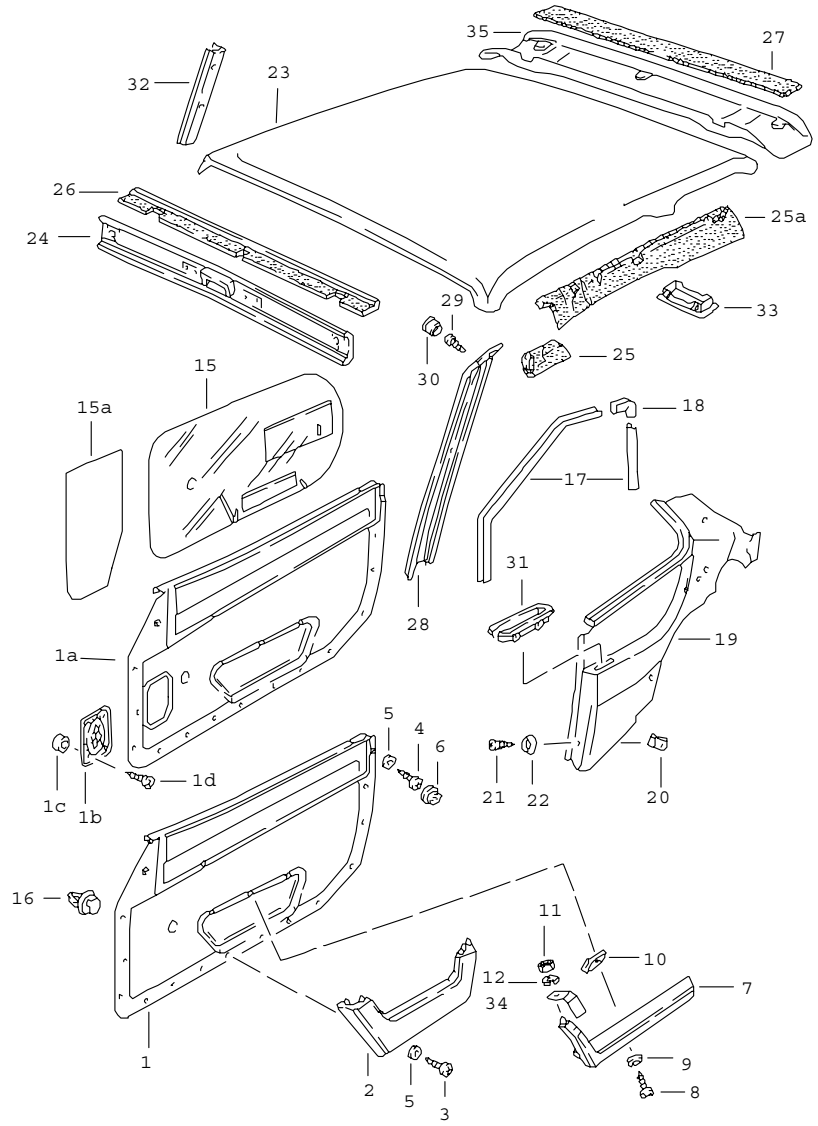

Pos	Part Number	Name	Remarks	Qty	Model
		linings			
(1)	477 867 011 D	door trim panel power windows manually adjustable leatherette	/L	1	
	DF9	black	-80		924
	DG1	brown	-80		924
	DG2	beige/brown	-80		924
1	477 867 012 D	door trim panel power windows manually adjustable leatherette	/R	1	
	DF9	black	-80		924
	DG1	brown	-80		924
	DG2	beige/brown	-80		924
(1)	477 867 011 D	door trim panel leatherette/ cloth tartan cloth	/L	1	
	EN4	black/ red-blue	81		
	EP4	black/ green-blue	81		
	EP5	brown/ brown-beige	81		
1	477 867 012 D	door trim panel leatherette/ cloth tartan cloth	/R	1	
	EN4	black/ red-blue	81		
	EP4	black/ green-blue	81		
	EP5	brown/ brown-beige	81		
(1)	477 867 011 G	door trim panel power windows manually adjustable leatherette	/L 81-82	1	
	DF9	black			

Pos	Part Number	Name	Remarks	Qty	Model
	DG1	brown			
	DG2	beige/brown			
(1)	477 867 012 G	door trim panel power windows manually adjustable leatherette	/R 81-82	1	
	DF9	black			
	DG1	brown			
	DG2	beige/brown			
(1)	477 867 011 G	door trim panel leatherette/ checker board velour	/L 81-82	1	
	FE5	black/ grey/black			
	FE6	brown/ beige/brown			
(1)	477 867 012 G	door trim panel leatherette/ checker board velour	/R 81-82	1	
	FE5	black/ grey/black			
	FE6	brown/ beige/brown			
(1)	477 867 011 G	door trim panel leatherette/ pin stripe velour	/L 81-82	1	
	GF5	black/ black-red			
	GM5	black/ black-white	81		924
(1)	477 867 012 G	door trim panel leatherette/ pin stripe velour	/R 81-82	1	
	GF5	black/ black-red			
	GM5	black/ black-white	81		924

Pos	Part Number	Name	Remarks	Qty	Model
(1A)	477 867 011 M	door trim panel power windows manually adjustable leatherette	/L 83-	1	
	DF9	black F >>92DN4 02148 F >>93DN1 00189			924 TURBO
	KZ7	black F 92DN4 02149>> F 93DN1 00190>>			924 TURBO
1A	477 867 012 M	door trim panel power windows manually adjustable leatherette	/R 83-	1	
	DF9	black F >>92DN4 02148 F >>93DN1 00189			924 TURBO
	KZ7	black F 92DN4 02149>> F 93DN1 00190>>			924 TURBO
(1A)	477 867 011 Q	door trim panel power windows manually adjustable leatherette	/L	1	
	DG1	brown F >>92DN4 02148 F >>93DN1 00189			924 TURBO
	JS3	grey-beige F >>92DN4 02148 F >>93DN1 00189			924 TURBO
	KZ8	brown F 92DN4 02149>> F 93DN1 00190>>			924 TURBO
	KZ9	grey-beige F 92DN4 02149>> F 93DN1 00190>>			924 TURBO
(1A)	477 867 012 Q	door trim panel power windows manually adjustable leatherette	/R	1	
	DG1	brown F >>92DN4 02148 F >>93DN1 00189			924 TURBO

Pos	Part Number	Name	Remarks	Qty	Model
	JS3	grey-beige F >>92DN4 02148 F >>93DN1 00189			924 TURBO
	KZ8	brown F 92DN4 02149>> F 93DN1 00190>>			924 TURBO
	KZ9	grey-beige F 92DN4 02149>> F 93DN1 00190>>			924 TURBO
(1)	477 867 011 E	door trim panel power windows electrically adjustable leatherette	/LL/L-80	1	
	DF9	black			
	DG1	brown			
	DG2	beige/brown			
(1)	477 867 012 E	door trim panel power windows electrically adjustable leatherette	/LL/R-80	1	
	DF9	black			
	DG1	brown			
	DG2	beige/brown			
(1)	478 867 011 E	door trim panel power windows electrically adjustable leatherette	/RL/L-80	1	
	DF9	black			
	DG1	brown			
	DG2	beige/brown			
(1)	478 867 012 E	door trim panel power windows electrically adjustable leatherette	/RL/R-80	1	
	DF9	black			
	DG1	brown			
	DG2	beige/brown			

Pos	Part Number	Name	Remarks	Qty	Model
(1)	477 867 011 E	door trim panel leatherette/ cloth tartan cloth	/LL/L-80	1	
	EN4	black/ red-blue			
	EP4	black/ green-blue			
	EP5	brown/ brown-beige			
(1)	477 867 012 E	door trim panel leatherette/ cloth tartan cloth	/LL/R-80	1	
	EN4	black/ red-blue			
	EP4	black/ green-blue			
	EP5	brown/ brown-beige			
(1)	478 867 011 E	door trim panel leatherette/ cloth tartan cloth	/RL/L-80	1	
	EN4	black/ red-blue			
	EP4	black/ green-blue			
	EP5	brown/ brown-beige			
(1)	478 867 012 E	door trim panel leatherette/ cloth tartan cloth	/RL/R-80	1	
	EN4	black/ red-blue			
	EP4	black/ green-blue			
	EP5	brown/ brown-beige			

Pos	Part Number	Name	Remarks	Qty	Model
(1)	477 867 011 E	door trim panel leatherette/ checker board velour	/LL/L-80	1	
	FE5	black/ grey/black			
	FE6	brown/ beige/brown			
(1)	477 867 012 E	door trim panel leatherette/ checker board velour	/LL/R-80	1	
	FE5	black/ grey/black			
	FE6	brown/ beige/brown			
(1)	478 867 011 E	door trim panel leatherette/ checker board velour	/RL/L-80	1	
	FE5	black/ grey/black			
	FE6	brown/ beige/brown			
(1)	478 867 012 E	door trim panel leatherette/ checker board velour	/RL/R-80	1	
	FE5	black/ grey/black			
	FE6	brown/ beige/brown			
(1)	477 867 011 E	door trim panel leatherette/ cloth FISCHGRAET	/LL/L-80	1	
	EH5	black/ orange			
	EH6	brown/ brown-beige			
(1)	477 867 012 E	door trim panel leatherette/ cloth FISCHGRAET	/LL/R-80	1	
	EH5	black/ orange			
	EH6	brown/ brown-beige			
(1)	478 867 011 E	door trim panel leatherette/ cloth FISCHGRAET	/RL/L-80	1	
	EH5	black/ orange			
	EH6	brown/ brown-beige			
(1)	478 867 012 E	door trim panel leatherette/ cloth FISCHGRAET	/RL/R-80	1	
	EH5	black/ orange			
	EH6	brown/ brown-beige			
(1)	477 867 011 H	door trim panel left power windows electrically adjustable leatherette	/LL81-82	1	
	DF9	black			
	DG1	brown			
	DG2	beige/brown			
(1)	477 867 012 H	door trim panel right power windows electrically adjustable leatherette	/LL81-82	1	
	DF9	black			
	DG1	brown			
	DG2	beige/brown			
(1)	478 867 011 G	door trim panel left power windows electrically adjustable leatherette	/RL81-82	1	
	DF9	black			
	DG1	brown			

Pos	Part Number	Name	Remarks	Qty	Model
	DG2	beige/brown			
(1)	478 867 012 G	door trim panel right power windows electrically adjustable leatherette	/RL81-82	1	
	DF9	black			
	DG1	brown			
	DG2	beige/brown			
(1)	477 867 011 H	door trim panel left leatherette/ checker board velour	/LL81-82	1	
	FE5	black/ grey/black			
	FE6	brown/ beige/brown			
(1)	477 867 012 H	door trim panel right leatherette/ checker board velour	/LL81-82	1	
	FE5	black/ grey/black			
	FE6	brown/ beige/brown			
(1)	478 867 011 G	door trim panel left leatherette/ checker board velour	/RL81-82	1	
	FE5	black/ grey/black			
	FE6	brown/ beige/brown			
(1)	478 867 012 G	door trim panel right leatherette/ checker board velour	/RL81-82	1	
	FE5	black/ grey/black			
	FE6	brown/ beige/brown			
(1)	477 867 011 H	door trim panel left leatherette/ pin stripe velour	/LL81-82	1	
	GF5	black/ black-red			
	GM5	black/ black-white	81		924
(1)	477 867 012 H	door trim panel right leatherette/ pin stripe velour	/LL81-82	1	
	GF5	black/ black-red			
	GM5	black/ black-white	81		924
(1)	478 867 011 G	door trim panel left leatherette/ pin stripe velour	/RL81-82	1	
	GF5	black/ black-red			
	GM5	black/ black-white	81		924
(1)	478 867 012 G	door trim panel right leatherette/ pin stripe velour	/RL81-82	1	
	GF5	black/ black-red			
	GM5	black/ black-white	81		924
(1)	477 867 011 H	door trim panel left leatherette/ stripe design	/LL81-82	1	
	HT1	black/ silver-black	82		JUBI
(1)	477 867 012 H	door trim panel right leatherette/ stripe design	/LL81-82	1	

Pos	Part Number	Name	Remarks	Qty	Model
	HT1	black/ silver-black	82		JUBI
(1)	478 867 011 G	door trim panel left leatherette/ stripe design	/RL81-82	1	
	HT1	black/ silver-black	82		JUBI
(1)	478 867 012 G	door trim panel right leatherette/ stripe design	/RL81-82	1	
	HT1	black/ silver-black	82		JUBI
(1A)	477 867 011 N	door trim panel power windows electrically adjustable leatherette	/LL/L83-	1	
	DF9	black F >>92DN4 02148 F >>93DN1 00189			924 TURBO
	KZ7	black F 92DN4 02149>> F 93DN1 00190>>			924 TURBO
1A	477 867 012 N	door trim panel power windows electrically adjustable leatherette	/LL/R83-	1	
	DF9	black F >>92DN4 02148 F >>93DN1 00189			924 TURBO
	KZ7	black F 92DN4 02149>> F 93DN1 00190>>			924 TURBO
(1A)	478 867 011 M	door trim panel power windows electrically adjustable leatherette	/RL/L83-	1	
	DF9	black F >>92DN4 02148 F >>93DN1 00189			924 TURBO
	KZ7	black F 92DN4 02149>> F 93DN1 00190>>			924 TURBO
1A	478 867 012 M	door trim panel power windows electrically adjustable leatherette	/RL/R83-	1	
	DF9	black F >>92DN4 02148 F >>93DN1 00189			924 TURBO
	KZ7	black F 92DN4 02149>> F 93DN1 00190>>			924 TURBO
(1A)	477 867 011 N	door trim panel leatherette pin stripe velour	/LL/L83-	1	
	GM5	black/			
1A	477 867 012 N	door trim panel leatherette pin stripe velour	/LL/R83-	1	
	GM5	black/			
(1A)	478 867 011 M	door trim panel leatherette pin stripe velour	/RL/L83-	1	
	GM5	black/			
1A	478 867 012 M	door trim panel leatherette pin stripe velour	/RL/R83-	1	
	GM5	black/			
(1A)	477 867 011 N	door trim panel black-white leatherette/ checker board velour	/LL/L83-	1	
	JR9	black/ light grey-black			
1A	477 867 012 N	door trim panel black-white leatherette/ checker board velour	/LL/R83-	1	
	JR9	black/ light grey-black			
(1A)	478 867 011 M	door trim panel black-white leatherette/ checker board velour	/RL/L83-	1	

Pos	Part Number	Name	Remarks	Qty	Model
	JR9	black/ light grey-black			
1A	478 867 012 M	door trim panel black-white leatherette/ checker board velour	/RL/R83-	1	
	JR9	black/ light grey-black			
(1A)	477 867 011 R	door trim panel power windows electrically adjustable leatherette	/LL/L	1	
	DG1	brown F >>92DN4 02148 F >>93DN1 00189			924 TURBO
	JS3	brown/grey-beige F >>92DN4 02148 F >>93DN1 00189			924 TURBO
	KZ8	brown F 92DN4 02149>> F 93DN1 00190>>			924 TURBO
	KZ9	brown/grey-beige F 92DN4 02149>> F 93DN1 00190>>			924 TURBO
1A	477 867 012 R	door trim panel power windows electrically adjustable leatherette	/LL/R	1	
	DG1	brown F >>92DN4 02148 F >>93DN1 00189			924 TURBO
	JS3	brown/grey-beige F >>92DN4 02148 F >>93DN1 00189			924 TURBO
	KZ8	brown F 92DN4 02149>> F 93DN1 00190>>			924 TURBO
	KZ9	brown/grey-beige F 92DN4 02149>> F 93DN1 00190>>			924 TURBO
(1A)	478 867 011 N	door trim panel power windows electrically adjustable leatherette	/RL/L	1	
	DG1	brown F >>92DN4 02148 F >>93DN1 00189			924 TURBO
	JS3	brown/grey-beige F >>92DN4 02148 F >>93DN1 00189			924 TURBO
	KZ8	brown F 92DN4 02149>> F 93DN1 00190>>			924 TURBO
	KZ9	brown/grey-beige F 92DN4 02149>> F 93DN1 00190>>			924 TURBO
1A	478 867 012 N	door trim panel power windows electrically adjustable leatherette	/RL/R	1	
	DG1	brown F >>92DN4 02148 F >>93DN1 00189			924 TURBO
	JS3	brown/grey-beige F >>92DN4 02148 F >>93DN1 00189			924 TURBO
	KZ8	brown F 92DN4 02149>> F 93DN1 00190>>			924 TURBO
	KZ9	brown/grey-beige F 92DN4 02149>> F 93DN1 00190>>			924 TURBO
(1A)	477 867 011 R	door trim panel leatherette/ checker board velour	/LL/L	1	
	JS1	brown/ brown-grey			
1A	477 867 012 R	door trim panel leatherette/ checker board velour	/LL/R	1	
	JS1	brown/ brown-grey			
(1A)	478 867 011 N	door trim panel leatherette/ checker board velour	/RL/L	1	
	JS1	brown/ brown-grey			

Pos	Part Number	Name	Remarks	Qty	Model
1A	478 867 012 N	door trim panel leatherette/ checker board velour	/RL/R	1	
	JS1	brown/ brown-grey			
(1A)	477 867 011 R	door trim panel leatherette/ pin stripe velour	/LL/L	1	
	JS2	brown/ grey-beige-white			
	JS5	brown/ brown-beige			
1A	477 867 012 R	door trim panel leatherette/ pin stripe velour	/LL/R	1	
	JS2	brown/ grey-beige-white			
	JS5	brown/ brown-beige			
(1A)	478 867 011 N	door trim panel leatherette/ pin stripe velour	/RL/L	1	
	JS2	brown/ grey-beige-white			
	JS5	brown/ brown-beige			
1A	478 867 012 N	door trim panel leatherette/ pin stripe velour	/RL/R	1	
	JS2	brown/ grey-beige-white			
	JS5	brown/ brown-beige			
1B	477 867 081	cover loudspeaker	83-	2	
	01C	black			
	89S	brown F >>92DN4 03529 F >>93DN1 00239			924 TURBO
1B	477 867 081 A	cover loudspeaker		2	

Pos	Part Number	Name	Remarks	Qty	Model
	4RB	brown F 92DN4 03530>>>>92DN4 03530>>>>92DN4 03530>>>>

Pos	Part Number	Name	Remarks	Qty	Model
	43S	black			
		F >>92CN4 06384			924
		F >>93CN1 00861			TURBO
	3BF	black			
		F 92CN4 06385>>92DN4 02148			924
		F 93CN1 00862>>93DN1 00189			TURBO
	83S	beige			
		F >>92CN4 07430			924
		F >>93CN1 00932			TURBO
	1NF	beige	-82		
		F 92CN4 07431>>			924
		F 93CN1 00932>>			TURBO
	87S	brown			
		F >>92CN4 07430			924
		F >>93CN1 00932			TURBO
	8NF	brown			
		F 92CN4 07431>>92DN4 02148			924
		F 93CN1 00932>>93DN1 00189			TURBO
	8BR	grey	82		
	3FF	grey-beige			
		F >>92DN4 02148			924
		F >>93DN1 00189			TURBO
	1DB	black			
		F 92DN4 02149>>			924
		F 93DN1 00190>>			TURBO
	4RB	brown			
		F 92DN4 02149>>			924
		F 93DN1 00190>>			TURBO
	1DX	grey-beige			
		F 92DN4 02149>>			924
		F 93DN1 00190>>			TURBO
3	N 013 962 2	tapping screw B 3,9 X 16		6	
4	311 867 167	tapping screw 4,2		4	
5	900 151 028 02	washer 4,3		10	
6	311 867 169	cap		4	
	01C	black			
	90V	brown			
(7)	477 867 171	armrest	/L	1	

Pos	Part Number	Name	Remarks	Qty	Model
	041	black			
	89S	brown			
	5FX	grey-beige	83-		
7	477 867 172	armrest	/R	1	
	041	black			
	89S	brown			
	5FX	grey-beige	83-		
8	900 143 046 02	tapping screw B 4,8 X 16		6	
9	N 012 222 4	spring washer B 5		6	
10	999 591 722 02	speed nut B 4,8 X 19,8		6	
11	900 910 010 09	lock nut M 6		2	
12	N 011 524 7	washer 6		2	
(15)	477 867 177 D	sealing film	/L	1	
15	477 867 178 D	sealing film door trim panel	/R	1	
(15A)	477 867 179	sealing film	/L 83-	1	
15A	477 867 180	sealing film loudspeaker	/R 83-	1	
16	823 867 299	clip		25	
17	477 867 367	piping door frame		4	
18	477 867 371	end piece		2	
(19)	477 867 421	side trim panel	/L	1	
	05T	black			
	21S	brown			
19	477 867 422 A	side trim panel	/R	1	
		F >>92CN4 02197			924
		F >>93CN1 00305			TURBO
	05T	black			

Pos	Part Number	Name	Remarks	Qty	Model
	21S	brown			
(19)	944 555 021 01	side trim panel	/L	1	
	05T	black	-82		
	21S	brown	-82		
	1DB	black	83-		
	4RB	brown	83-		
(19)	944 555 022 01	side trim panel F 92CN4 02198>> F 93CN1 00306>>	/R	1	924 TURBO
	05T	black	-82		
	21S	brown	-82		
	1DB	black	83-		
	4RB	brown	83-		
-	111 857 785	plug		2	
-	111 857 795	cover disc		2	
20	N 015 438 1	speed nut B 3,5 X 16,5		2	
21	N 014 087 5	rais. counters. h. tap. s. B 3,5 X 16		4	
22	N 011 578 1	cone washer 3,7		4	
23	477 867 503	rooflining		1	
	05T	black			
	21S	brown F >>92DN4 02148 F >>93DN1 00189			924 TURBO
	4RB	brown F 92DN4 02149>> F 93DN1 00190>>			924 TURBO
(23)	477 867 501 A	rooflining	-83	1	M 650
	05T	black			
	21S	brown F >>92DN4 02148 F >>93DN1 00189			924 TURBO
	4RB	brown F 92DN4 02149>> F 93DN1 00190>>			924 TURBO
(23)	A 944 555 051 01	rooflining	84-	1	M 650
	05T	black			
	4RB	brown			
(23)	944 555 519 00	rooflining	84-	1	M 650
	05T	black			
	4RB	brown			
-	477 867 543	bow		3	
24	477 867 511	lining roof frame	/V	1	
	05T	black	-82		
	21S	brown	-82		
	1DB	black	83-		
	4RB	brown	83-		
25A	E 944 555 115 00	roof frame padding	/L	1	
(25)	A 944 555 116 00	roof frame padding	/R -83	1	
(25A)	944 555 116 00	roof frame padding	/R	1	
26	477 867 531	roof frame padding	/V -83	1	M 650
(26)	944 564 531 01	roof frame padding	/V 84-	1	M 650
27	477 867 533	roof frame padding	/H -83	1	M 650
28	477 867 553 A	lining windscreen frame part	/L	1	
	05T	black	-82		
	21S	brown	-82		
	1DB	black	83-		
	4RB	brown	83-		
(28)	477 867 554 A	lining windscreen frame part	/R	1	
	05T	black	-82		
	21S	brown	-82		

Pos	Part Number	Name	Remarks	Qty	Model
	1DB	black	83-		
	4RB	brown	83-		
29	N 013 962 2	tapping screw B 3,9 X 16		6	
30	914 552 233 10	filler piece		6	
	01C	black			
	90V	brown			
31	477 867 653	rose		2	
32	477 867 655	lining centre pillar	/L	1	
	05T	black			
	21S	brown F >>92DN4 02148 F >>93DN1 00189			924 TURBO
	4RB	brown F 92DN4 02149>> F 93DN1 00190>>			924 TURBO
(32)	477 867 656	lining centre pillar	/R	1	
	05T	black			
	21S	brown F >>92DN4 02148 F >>93DN1 00189			924 TURBO
	4RB	brown F 92DN4 02149>> F 93DN1 00190>>			924 TURBO
33	477 867 923 A	cap		2	
	01C	black			
	89S	brown			
(34)	477 867 153	fastening hook	/L	1	
34	477 867 154	fastening hook armrest	/R	1	
35	944 555 941 00	lining roof frame	/H 84-	1	M 650
	05T	black			
	4RB	brown			

Pos	Part Number	Name	Remarks	Qty	Model
		- -- E N D -- -			

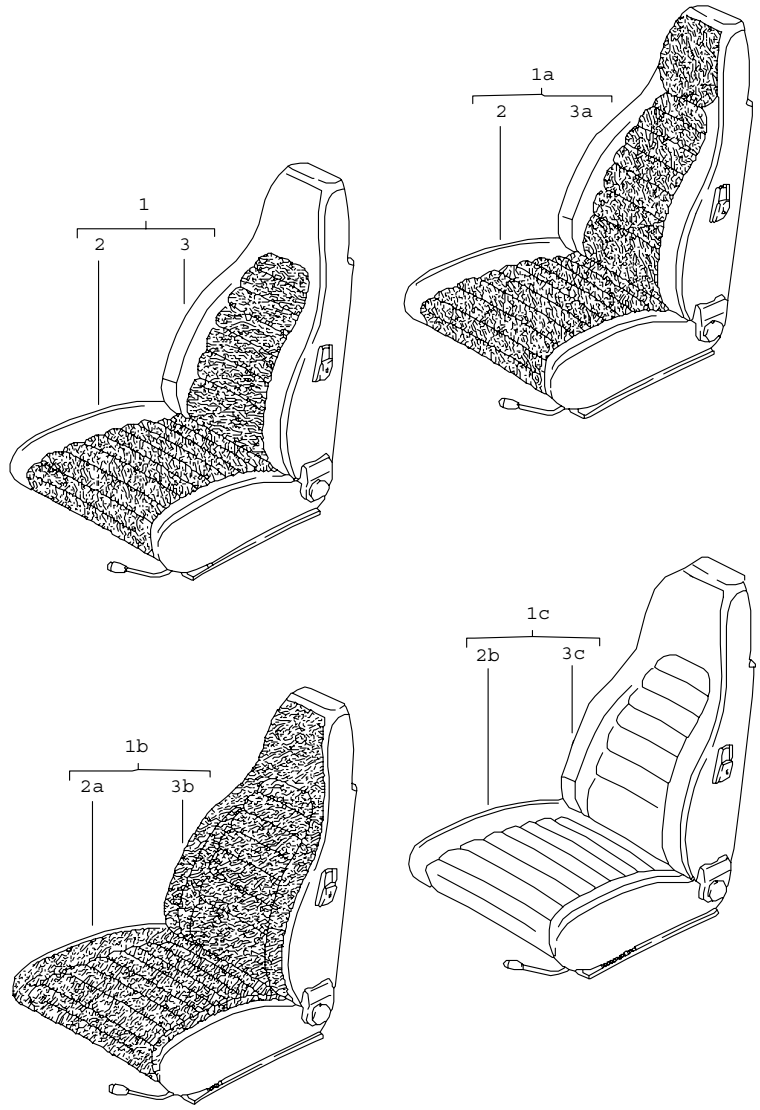

Pos	Part Number	Name	Remarks	Qty	Model
		front seat complete and cover			
1	A 477 881 021 E	front seat leatherette/ centre part in cloth FISCHGRAET	/L	1	
	DC2	beige/ brown-beige	-80		
	DC5	brown/ brown-beige	-80		
	DC8	black/ orange	-80		
(1)	A 477 881 022 E	front seat leatherette/ centre part in cloth FISCHGRAET	/R	1	
	DC2	beige/ brown-beige	-80		
	DC5	brown/ brown-beige	-80		
	DC8	black/ orange	-80		
1	A 477 881 021 E	front seat leatherette/ centre part in cloth pin stripe velour	/L	1	
	FD5	black/ black-white F >>92DN4 02148 F >>93DN1 00189			924 TURBO
	FD6	brown/ brown-beige F >>92DN4 02148 F >>93DN1 00189			924 TURBO
	FD7	beige/ brown-beige	-82		
	JR7	grey-beige/ grey-beige-white F >>92DN4 02148 F >>93DN1 00189			924 TURBO

Pos	Part Number	Name	Remarks	Qty	Model
	JN1	black/ black-white F 92DN4 02149>>>

Pos	Part Number	Name	Remarks	Qty	Model
	JR5	brown/ brown-grey F >>92DN4 02148 F >>93DN1 00189			 924 TURBO
	JR6	grey-beige/ brown-grey F >>92DN4 02148 F >>93DN1 00189			 924 TURBO
	LD5	black/ light grey-black F 92DN4 02149>> F 93DN1 00190>>			 924 TURBO
	LD6	brown/ brown-grey F 92DN4 02149>> F 93DN1 00190>>			 924 TURBO
	LD7	grey-beige/ brown-grey F 92DN4 02149>> F 93DN1 00190>>			 924 TURBO
(1A)	A 477 881 022 E	front seat leatherette/ centre part and head rest checker board velour	/R	1	
	FD8	black/ grey/black	-82		
	FD9	brown/ beige/brown	-82		
	FE1	beige/ beige/brown	-82		
	JR4	black/ light grey-black F >>92DN4 02148 F >>93DN1 00189			 924 TURBO
	JR5	brown/ brown-grey F >>92DN4 02148 F >>93DN1 00189			 924 TURBO
	JR6	grey-beige/ brown-grey F >>92DN4 02148 F >>93DN1 00189			 924 TURBO

Pos	Part Number	Name	Remarks	Qty	Model
	LD5	black/ light grey-black F 92DN4 02149>> F 93DN1 00190>>			 924 TURBO
	LD6	brown/ brown-grey F 92DN4 02149>> F 93DN1 00190>>			 924 TURBO
	LD7	grey-beige/ brown-grey F 92DN4 02149>> F 93DN1 00190>>			 924 TURBO
1A	A 477 881 021 E	front seat leatherette/ centre part and head rest pin stripe velour	/L	1	
	GM4	black/ black-white piping white special model "LE MANS"	 81		
	KU8	black/ black-red piping black special model	 82		 924 (CH)
(1A)	A 477 881 022 E	front seat leatherette/ centre part and head rest pin stripe velour	/R	1	
	GM4	black/ black-white piping white special model "LE MANS"	 81		
	KU8	black/ black-red piping black special model	 82		 924 (CH)

Pos	Part Number	Name	Remarks	Qty	Model
1A	A 477 881 021 E	front seat leatherette/ centre part and head rest porsche lettering cloth	/L	1	
	LR6	black/black	84		
	LR7	brown/brown	84		
	LR8	grey-beige/grey-beige	84		
	PX1	black/black	85		
	PX3	brown/brown	85		
	QD8	grey-beige/grey-beige	85		
(1A)	A 477 881 022 E	front seat leatherette/ centre part and head rest porsche lettering cloth	/R	1	
	LR6	black/black	84		
	LR7	brown/brown	84		
	LR8	grey-beige/grey-beige	84		
	PX1	black/black	85		
	PX3	brown/brown	85		
	QD8	grey-beige/grey-beige	85		
1B	A 477 881 021 E	front seat leatherette/ seat and backrest surface berber cloth	/L	1	
	GE9	black/ grey/black F >>92DN4 02148 F >>93DN1 00189			924 TURBO
	FE3	brown/ beige/brown F >>92DN4 02148 F >>93DN1 00189			924 TURBO
	FE4	beige/ beige/brown	-82		
	JR8	grey-beige/ grey-beige-grey F >>92DN4 02148 F >>93DN1 00189			924 TURBO
	JM3	black/ grey/black F 92DN4 02149>> F 93DN1 00190>>			924 TURBO
	JM4	brown/ beige/brown F 92DN4 02149>> F 93DN1 00190>>			924 TURBO
	JM9	grey-beige/ grey-beige-grey F 92DN4 02149>> F 93DN1 00190>>			924 TURBO
(1B)	A 477 881 022 E	front seat leatherette/ seat and backrest surface berber cloth	/R	1	
	GE9	black/ grey/black F >>92DN4 02148 F >>93DN1 00189			924 TURBO
	FE3	brown/ beige/brown F >>92DN4 02148 F >>93DN1 00189			924 TURBO
	FE4	beige/ beige/brown	-82		
	JR8	grey-beige/ grey-beige-grey F >>92DN4 02148 F >>93DN1 00189			924 TURBO
	JM3	black/ grey/black F 92DN4 02149>> F 93DN1 00190>>			924 TURBO
	JM4	brown/ beige/brown F 92DN4 02149>> F 93DN1 00190>>			924 TURBO
	JM9	grey-beige/ grey-beige-grey F 92DN4 02149>> F 93DN1 00190>>			924 TURBO

Pos	Part Number	Name	Remarks	Qty	Model
1B	A 477 881 021 L	front seat leatherette/ seat and backrest surface porsche lettering cloth	/L 84-	1	
	LR1	black/black	84		
	LR2	brown/brown	84		
	LR3	grey-beige/grey-beige	84		
	PX2	black/black	85		
	PX4	brown/brown	85		
	QD9	grey-beige/grey-beige	85		
	NC3	black/ anthracite-burgundy special model	84		TURBO (I)
(1B)	A 477 881 022 L	front seat leatherette/ seat and backrest surface porsche lettering cloth	/R 84-	1	
	LR1	black/black	84		
	LR2	brown/brown	84		
	LR3	grey-beige/grey-beige	84		
	PX2	black/black	85		
	PX4	brown/brown	85		
	QD9	grey-beige/grey-beige	85		
	NC3	black/ anthracite-burgundy special model	84		TURBO (I)
1C	A 477 881 021 F	front seat leatherette	/L	1	
	DD2	beige	-82		
	DD4	brown F >>92DN4 02148 F >>93DN1 00189			924 TURBO
	DD6	black F >>92DN4 02148 F >>93DN1 00189			924 TURBO
	4FK	grey-beige F >>92DN4 02148 F >>93DN1 00189			924 TURBO
	MC4	brown F 92DN4 02149>> F 93DN1 00190>>			924 TURBO
	MC5	grey-beige F 92DN4 02149>> F 93DN1 00190>>			924 TURBO
(1C)	A 477 881 022 F	front seat leatherette	/R	1	
	DD2	beige	-82		
	DD4	brown F >>92DN4 02148 F >>93DN1 00189			924 TURBO
	DD6	black F >>92DN4 02148 F >>93DN1 00189			924 TURBO
	4FK	grey-beige F >>92DN4 02148 F >>93DN1 00189			924 TURBO
	MC4	brown F 92DN4 02149>> F 93DN1 00190>>			924 TURBO
	MC5	grey-beige F 92DN4 02149>> F 93DN1 00190>>			924 TURBO
(1C)	A 477 881 021 H	front seat leather	/L -80	1	
	1AJ	black			
	2NF	beige			
	3NG	brown			
(1C)	A 477 881 022 H	front seat leather	/R -80	1	
	1AJ	black			
	2NF	beige			
	3NG	brown			
1C	A 477 881 021 K	front seat leatherette/ centre part leather not perforated	/L	1	

Pos	Part Number	Name	Remarks	Qty	Model
	QE1	black/black F 92DN4 02149>>92EN4 01588			
	QE2	brown/brown F 92DN4 02149>>92EN4 01588			
	QE3	grey-beige/grey-beige F 92DN4 02149>>92EN4 01588			
(1C)	A 477 881 022 K	front seat leatherette/ centre part leather not perforated	/R	1	
	QE1	black/black F 92DN4 02149>>92EN4 01588			
	QE2	brown/brown F 92DN4 02149>>92EN4 01588			
	QE3	grey-beige/grey-beige F 92DN4 02149>>92EN4 01588			
1C	A 477 881 021 K	front seat leatherette/ centre part leather perforated	/L	1	
	JN3	black/black F 92EN4 01589>>			
	JN4	brown/brown F 92EN4 01589>>			
	JN5	grey-beige/grey-beige F 92EN4 01589>>			
(1C)	A 477 881 022 K	front seat leatherette/ centre part leather perforated	/R	1	
	JN3	black/black F 92EN4 01589>>			
	JN4	brown/brown F 92EN4 01589>>			
	JN5	grey-beige/grey-beige F 92EN4 01589>>			

Pos	Part Number	Name	Remarks	Qty	Model
2	A 911 521 037 58	cover for cushion leatherette/ centre part FISCHGRAET F >>92FN4 01323	/L	1	
	DC2	beige/ brown-beige	-80		
	DC5	brown/ brown-beige	-80		
	DC8	black/ orange	-80		
(2)	A 911 521 038 58	cover for cushion leatherette/ centre part FISCHGRAET F >>92FN4 01323	/R	1	
	DC2	beige/ brown-beige	-80		
	DC5	brown/ brown-beige	-80		
	DC8	black/ orange	-80		
2	A 911 521 037 58	cover for cushion leatherette/ centre part pin stripe velour F >>92FN4 01323	/L	1	
	FD5	black/ black-white F >>92DN4 02148 F >>93DN1 00189			924 TURBO
	FD6	brown/ brown-beige F >>92DN4 02148 F >>93DN1 00189			924 TURBO
	FD7	beige/ brown-beige	-82		
	JR7	grey-beige/ grey-beige-white F >>92DN4 02148 F >>93DN1 00189			924 TURBO
	JN1	black/ black-white F 92DN4 02149>> F 93DN1 00190>>			924 TURBO

Pos	Part Number	Name	Remarks	Qty	Model
	JN2	brown/ brown-beige F 92DN4 02149>> F 93DN1 00190>>			 924 TURBO
	LD4	grey-beige/ grey-beige-white F 92DN4 02149>> F 93DN1 00190>>			 924 TURBO
	GM4	black/ black-white piping white special model "LE MANS"	 81		
	KU8	black/ black-red piping black special model	 82		 924 (CH)
(2)	A 911 521 038 58	cover for cushion leatherette/ centre part pin stripe velour F >>92FN4 01323	/R	1	
	FD5	black/ black-white F >>92DN4 02148 F >>93DN1 00189			 924 TURBO
	FD6	brown/ brown-beige F >>92DN4 02148 F >>93DN1 00189			 924 TURBO
	FD7	beige/ brown-beige	-82		
	JR7	grey-beige/ grey-beige-white F >>92DN4 02148 F >>93DN1 00189			 924 TURBO
	JN1	black/ black-white F 92DN4 02149>> F 93DN1 00190>>			 924 TURBO
	JN2	brown/ brown-beige F 92DN4 02149>> F 93DN1 00190>>			 924 TURBO

Pos	Part Number	Name	Remarks	Qty	Model
	LD4	grey-beige/ grey-beige-white F 92DN4 02149>> F 93DN1 00190>>			 924 TURBO
	GM4	black/ black-white piping white special model "LE MANS"	 81		
	KU8	black/ black-red piping black special model	 82		 924 (CH)
2	A 911 521 037 58	cover for cushion leatherette/ centre part tartan cloth F >>92FN4 01323	/L	1	
	EN3	black/ red-blue			
	EP1	black/ green-blue			
	EP2	brown/ brown-beige			
	EP3	beige/ brown-beige			
(2)	A 911 521 038 58	cover for cushion leatherette/ centre part tartan cloth F >>92FN4 01323	/R	1	
	EN3	black/ red-blue			
	EP1	black/ green-blue			
	EP2	brown/ brown-beige			
	EP3	beige/ brown-beige			

Pos	Part Number	Name	Remarks	Qty	Model
2	A 911 521 037 58	cover for cushion leatherette/ centre part checker board velour F >>92FN4 01323	/L	1	
	FD8	black/ grey/black	-82		
	FD9	brown/ beige/brown	-82		
	FE1	beige/ beige/brown	-82		
	JR4	black/ light grey-black F >>92DN4 02148 F >>93DN1 00189			924 TURBO
	JR5	brown/ brown-grey F >>92DN4 02148 F >>93DN1 00189			924 TURBO
	JR6	grey-beige/ brown-grey F >>92DN4 02148 F >>93DN1 00189			924 TURBO
	LD5	black/ light grey-black F 92DN4 02149>> F 93DN1 00190>>			924 TURBO
	LD6	brown/ brown-grey F 92DN4 02149>> F 93DN1 00190>>			924 TURBO
	LD7	grey-beige/ brown-grey F 92DN4 02149>> F 93DN1 00190>>			924 TURBO
(2)	A 911 521 038 58	cover for cushion leatherette/ centre part checker board velour F >>92FN4 01323	/R	1	
	FD8	black/ grey/black	-82		
	FD9	brown/ beige/brown	-82		
	FE1	beige/ beige/brown	-82		
	JR4	black/ light grey-black F >>92DN4 02148 F >>93DN1 00189			924 TURBO
	JR5	brown/ brown-grey F >>92DN4 02148 F >>93DN1 00189			924 TURBO
	JR6	grey-beige/ brown-grey F >>92DN4 02148 F >>93DN1 00189			924 TURBO
	LD5	black/ light grey-black F 92DN4 02149>> F 93DN1 00190>>			924 TURBO
	LD6	brown/ brown-grey F 92DN4 02149>> F 93DN1 00190>>			924 TURBO
	LD7	grey-beige/ brown-grey F 92DN4 02149>> F 93DN1 00190>>			924 TURBO
2	A 911 521 037 58	cover for cushion leatherette/ centre part in cloth stripe design F >>92FN4 01323	/L	1	
	HS9	black/ silver-black special model	82		
(2)	A 911 521 038 58	cover for cushion leatherette/ centre part in cloth stripe design F >>92FN4 01323	/R	1	
	HS9	black/ silver-black special model	82		
2	A 911 521 037 58	cover for cushion leatherette/ centre part porsche lettering cloth F >>92FN4 01323	/L	1	

Pos	Part Number	Name	Remarks	Qty	Model
	LR6	black/black	84		
	LR7	brown/brown	84		
	LR8	grey-beige/grey-beige	84		
	PX1	black/black	85		
	PX3	brown/brown	85		
	QD8	grey-beige/grey-beige	85		
(2)	A 911 521 038 58	cover for cushion leatherette/ centre part porsche lettering cloth F >>92FN4 01323	/R	1	
	LR6	black/black	84		
	LR7	brown/brown	84		
	LR8	grey-beige/grey-beige	84		
	PX1	black/black	85		
	PX3	brown/brown	85		
	QD8	grey-beige/grey-beige	85		
2	A 911 521 037 14	cover for cushion leather/ centre part in cloth stripe design	/L	1	M 402
	HU2	black/ silver-black special model	82		
(2)	A 911 521 038 14	cover for cushion leather/ centre part in cloth stripe design	/R	1	M 402
	HU2	black/ silver-black special model	82		
2A	A 911 521 037 58	cover for cushion leatherette/ seat surface berber cloth F >>92FN4 01323	/L	1	
	GE9	black/ grey/black F >>92DN4 02148 F >>93DN1 00189			924 TURBO
	FE3	brown/ beige/brown F >>92DN4 02148 F >>93DN1 00189			924 TURBO
	FE4	beige/ beige/brown	81-82		
	JR8	grey-beige/ grey-beige-grey F >>92DN4 02148 F >>93DN1 00189			924 TURBO
	JM3	black/ grey/black F 92DN4 02149>> F 93DN1 00190>>			924 TURBO
	JM4	brown/ beige/brown F 92DN4 02149>> F 93DN1 00190>>			924 TURBO
	JM9	grey-beige/ grey-beige-grey F 92DN4 02149>> F 93DN1 00190>>			924 TURBO
(2A)	A 911 521 038 58	cover for cushion leatherette/ seat surface berber cloth F >>92FN4 01323	/R	1	
	GE9	black/ grey/black F >>92DN4 02148 F >>93DN1 00189			924 TURBO
	FE3	brown/ beige/brown F >>92DN4 02148 F >>93DN1 00189			924 TURBO
	FE4	beige/ beige/brown	81-82		
	JR8	grey-beige/ grey-beige-grey F >>92DN4 02148 F >>93DN1 00189			924 TURBO
	JM3	black/ grey/black F 92DN4 02149>> F 93DN1 00190>>			924 TURBO

Pos	Part Number	Name	Remarks	Qty	Model
	JM4	brown/ beige/brown F 92DN4 02149>> F 93DN1 00190>>			 924 TURBO
	JM9	grey-beige/ grey-beige-grey F 92DN4 02149>> F 93DN1 00190>>			 924 TURBO
2A	A 911 521 037 58	cover for cushion F >>92FN4 01323	/L	1	
(2A)	A 911 521 038 58	cover for cushion F >>92FN4 01323	/R	1	
2A	A 911 521 037 17	cover for cushion leatherette/ seat surface porsche lettering cloth	/L 84-	1	
	LR1	black/black	84		
	LR2	brown/brown	84		
	LR3	grey-beige/grey-beige	84		
	PX2	black/black	85		
	PX4	brown/brown	85		
	QD9	grey-beige/grey-beige	85		
	NC3	black/ anthracite-burgundy special model	84		TURBO (I)
(2A)	A 911 521 038 17	cover for cushion leatherette/ seat surface porsche lettering cloth	/R 84-	1	
	LR1	black/black	84		
	LR2	brown/brown	84		
	LR3	grey-beige/grey-beige	84		
	PX2	black/black	85		
	PX4	brown/brown	85		
	QD9	grey-beige/grey-beige	85		
	NC3	black/ anthracite-burgundy special model	84		TURBO (I)

Pos	Part Number	Name	Remarks	Qty	Model
2B	A 911 521 037 57	cover for cushion leatherette	/L	1	
	DD2	beige	-82		
	DD4	brown F >>92DN4 02148 F >>93DN1 00189			 924 TURBO
	DD6	black F >>92DN4 02148 F >>93DN1 00189			 924 TURBO
	4FK	grey-beige F >>92DN4 02148 F >>93DN1 00189			 924 TURBO
	MC3	black F 92DN4 02149>> F 93DN1 00190>>			 924 TURBO
	MC4	brown F 92DN4 02149>> F 93DN1 00190>>			 924 TURBO
	MC5	grey-beige F 92DN4 02149>> F 93DN1 00190>>			 924 TURBO
(2B)	A 911 521 038 57	cover for cushion leatherette	/R	1	
	DD2	beige	-82		
	DD4	brown F >>92DN4 02148 F >>93DN1 00189			 924 TURBO
	DD6	black F >>92DN4 02148 F >>93DN1 00189			 924 TURBO
	4FK	grey-beige F >>92DN4 02148 F >>93DN1 00189			 924 TURBO
	MC3	black F 92DN4 02149>> F 93DN1 00190>>			 924 TURBO
	MC4	brown F 92DN4 02149>> F 93DN1 00190>>			 924 TURBO
	MC5	grey-beige F 92DN4 02149>> F 93DN1 00190>>			 924 TURBO

Pos	Part Number	Name	Remarks	Qty	Model
(2B)	A 911 521 037 60	cover for cushion leather	/L -80	1	
	1AJ	black			
	2NF	beige			
	3NG	brown			
(2B)	A 911 521 038 60	cover for cushion leather	/R -80	1	
	1AJ	black			
	2NF	beige			
	3NG	brown			
2B	A 911 521 037 75	cover for cushion leatherette/ centre part leather not perforated F >>92FN4 01323	/L	1	
	QE1	black/black F 92DN4 02149>>92EN4 01588			
	QE2	brown/brown F 92DN4 02149>>92EN4 01588			
	QE3	grey-beige/grey-beige F 92DN4 02149>>92EN4 01588			
(2B)	A 911 521 038 75	cover for cushion leatherette/ centre part leather not perforated F >>92FN4 01323	/R	1	
	QE1	black/black F 92DN4 02149>>92EN4 01588			
	QE2	brown/brown F 92DN4 02149>>92EN4 01588			
	QE3	grey-beige/grey-beige F 92DN4 02149>>92EN4 01588			
2B	A 911 521 037 75	cover for cushion leatherette/ centre part leather perforated F >>92FN4 01323	/L	1	
	JN3	black/black F 92EN4 01589>>			
	JN4	brown/brown F 92EN4 01589>>			
	JN5	grey-beige/grey-beige F 92EN4 01589>>			
(2B)	A 911 521 038 75	cover for cushion leatherette/ centre part leather perforated F >>92FN4 01323	/R	1	
	JN3	black/black F 92EN4 01589>>			
	JN4	brown/brown F 92EN4 01589>>			
	JN5	grey-beige/grey-beige F 92EN4 01589>>			
3	A 911 521 072 59	backrest cover leatherette/ centre part FISCHGRAET F >>92FN4 01323		2	
	DC2	beige/ brown-beige	-80		
	DC5	brown/ brown-beige	-80		
	DC8	black/ orange	-80		
3	A 911 521 072 59	backrest cover leatherette/ centre part in cloth pin stripe velour F >>92FN4 01323		2	
	FD5	black/ black-white F >>92DN4 02148 F >>93DN1 00189			924 TURBO
	FD6	brown/ brown-beige F >>92DN4 02148 F >>93DN1 00189			924 TURBO
	FD7	beige/ brown-beige	-82		

Pos	Part Number	Name	Remarks	Qty	Model
	JR7	grey-beige/ grey-beige-white F >>92DN4 02148 F >>93DN1 00189			 924 TURBO
	JN1	black/ black-white F 92DN4 02149>> F 93DN1 00190>>			 924 TURBO
	JN2	brown/ brown-beige F 92DN4 02149>> F 93DN1 00190>>			 924 TURBO
	LD4	grey-beige/ grey-beige-white F 92DN4 02149>> F 93DN1 00190>>			 924 TURBO
3	A 911 521 072 59	backrest cover leatherette/ centre part in cloth stripe design F >>92FN4 01323		2	
	HS9	black/ silver-black special model	82		
3	A 911 521 072 24	backrest cover leather centre part in cloth stripe design		2	
	HU2	black/ silver-black special model	82		
3A	A 911 521 072 59	backrest cover leatherette/ centre part and head rest tartan cloth F >>92FN4 01323		2	
	EN3	black/ red-blue			
	EP1	black/ green-blue			
	EP2	brown/ brown-beige			
	EP3	beige/ brown-beige			
3A	A 911 521 072 59	backrest cover leatherette/ centre part and head rest checker board velour F >>92FN4 01323		2	
	FD8	black/ grey/black	-82		
	FD9	brown/ beige/brown	-82		
	FE1	beige/ beige/brown	-82		
	JR4	black/ light grey-black F >>92DN4 02148 F >>93DN1 00189			 924 TURBO
	JR5	brown/ brown-grey F >>92DN4 02148 F >>93DN1 00189			 924 TURBO
	JR6	grey-beige/ brown-grey F >>92DN4 02148 F >>93DN1 00189			 924 TURBO
	LD5	black/ light grey-black F 92DN4 02149>> F 93DN1 00190>>			 924 TURBO
	LD6	brown/ brown-grey F 92DN4 02149>> F 93DN1 00190>>			 924 TURBO
	LD7	grey-beige/ brown-grey F 92DN4 02149>> F 93DN1 00190>>			 924 TURBO

Pos	Part Number	Name	Remarks	Qty	Model
	GM4	black/ black-white piping white special model "LE MANS"	81		
	KU8	black/ black-red piping black special model	82		924 (CH)
3A	A 911 521 072 59	backrest cover leatherette/ centre part and head rest porsche lettering cloth F >>92FN4 01323		2	
	LR6	black/black	84		
	LR7	brown/brown	84		
	LR8	grey-beige/grey-beige	84		
	PX1	black/black	85		
	PX3	brown/brown	85		
	QD8	grey-beige/grey-beige	85		
3B	A 911 521 072 59	backrest cover leatherette/ backrest surface berber cloth F >>92FN4 01323		2	
	GE9	black/ grey/black F >>92DN4 02148 F >>93DN1 00189			924 TURBO
	FE3	brown/ beige/brown F >>92DN4 02148 F >>93DN1 00189			924 TURBO
	FE4	beige/ beige/brown	81-82		
	JR8	grey-beige/ grey-beige-grey F >>92DN4 02148 F >>93DN1 00189			924 TURBO
	JM3	black/ grey/black F 92DN4 02149>> F 93DN1 00190>>			924 TURBO
	JM4	brown/ beige/brown F 92DN4 02149>> F 93DN1 00190>>			924 TURBO
	JM9	grey-beige/ grey-beige-grey F 92DN4 02149>> F 93DN1 00190>>			924 TURBO
3B	A 911 521 072 59	backrest cover F >>92FN4 01323		2	
3B	A 911 521 072 25	backrest cover leatherette/ backrest surface porsche lettering cloth	84-	2	
	LR1	black/black	84		
	LR2	brown/brown	84		
	LR3	grey-beige/grey-beige	84		
	PX2	black/black	85		
	PX4	brown/brown	85		
	QD9	grey-beige/grey-beige	85		
	NC3	black/ anthracite-burgundy special model	84		TURBO (I)
3C	A 911 521 072 57	backrest cover leatherette		2	
	DD2	beige	-82		
	DD4	brown F >>92DN4 02148 F >>93DN1 00189			924 TURBO
	DD6	black F >>92DN4 02148 F >>93DN1 00189			924 TURBO
	4FK	grey-beige F >>92DN4 02148 F >>93DN1 00189			924 TURBO

Pos	Part Number	Name	Remarks	Qty	Model
	MC3	black F 92DN4 02149>> F 93DN1 00190>>			924 TURBO
	MC4	brown F 92DN4 02149>> F 93DN1 00190>>			924 TURBO
	MC5	grey-beige F 92DN4 02149>> F 93DN1 00190>>			924 TURBO
(3C)	A 911 521 072 60	backrest cover leather	-80	2	
	1AJ	black			
	2NF	beige			
	3NG	brown			
3C	A 911 521 072 75	backrest cover leatherette/ centre part leather not perforated F >>92FN4 01323		2	
	QE1	black/black F 92DN4 02149>>92EN4 01588			
	QE2	brown/brown F 92DN4 02149>>92EN4 01588			
	QE3	grey-beige/grey-beige F 92DN4 02149>>92EN4 01588			
3C	A 911 521 072 75	backrest cover leatherette/ centre part leather perforated F >>92FN4 01323		2	
	JN3	black/black F 92EN4 01589>>			
	JN4	brown/brown F 92EN4 01589>>			
	JN5	grey-beige/grey-beige F 92EN4 01589>>			
3A	A 911 521 072 76	backrest cover leatherette/ centre part porsche lettering cloth F 92FN4 01324>>		2	
	PX1	black/black			
	PX3	brown/brown			
	NX9	light grey/light grey leatherette/ centre part in cloth pin stripe velour			
	JN1	black/ black-white			
	JN2	brown/ brown-beige			
	RC7	light grey/ light grey-white			
3A	A 911 521 072 76	backrest cover leatherette/ centre part in cloth pin stripe flannel F 92FN4 01324>>		2	
	NX4	black/anthracite			
	NX5	brown/brown			
	NX6	light grey/light grey			
2	A 911 521 037 62	cover for cushion leatherette/ centre part porsche lettering cloth F 92FN4 01324>>	/L	1	
	PX1	black/black			
	PX3	brown/brown			
	NX9	light grey/light grey			
(2)	A 911 521 038 62	cover for cushion leatherette/ centre part porsche lettering cloth F 92FN4 01324>>	/R	1	
	PX1	black/black			
	PX3	brown/brown			

Pos	Part Number	Name	Remarks	Qty	Model
	NX9	light grey/light grey			
2	A 911 521 037 62	cover for cushion leatherette/ centre part in cloth pin stripe velour F 92FN4 01324>>	/L	1	
	JN1	black/ black-white			
	JN2	brown/ brown-beige			
	RC7	light grey/ light grey-white			
(2)	A 911 521 038 62	cover for cushion leatherette/ centre part in cloth pin stripe velour F 92FN4 01324>>	/R	1	
	JN1	black/ black-white			
	JN2	brown/ brown-beige			
	RC7	light grey/ light grey-white			
2	A 911 521 037 62	cover for cushion leatherette/ centre part in cloth pin stripe flannel F 92FN4 01324>>	/L	1	
	NX4	black/anthracite			
	NX5	brown/brown			
	NX6	light grey/light grey			
(2)	A 911 521 038 62	cover for cushion leatherette/ centre part in cloth pin stripe flannel F 92FN4 01324>>	/R	1	
	NX4	black/anthracite			
	NX5	brown/brown			
	NX6	light grey/light grey			

Pos	Part Number	Name	Remarks	Qty	Model
(3C)	A 911 521 072 77	backrest cover leatherette/ centre part leather perforated F 92FN4 01324>>		2	
	JN3	black/black			
	JN4	brown/brown			
	NZ7	light grey/light grey			
2B	A 911 521 037 76	cover for cushion leatherette/ centre part leather perforated F 92FN4 01324>>	/L	1	
	JN3	black/black			
	JN4	brown/brown			
	NZ7	light grey/light grey			
(2B)	A 911 521 038 76	cover for cushion leatherette/ centre part leather perforated F 92FN4 01324>>	/R	1	
	JN3	black/black			
	JN4	brown/brown			
	NZ7	light grey/light grey			

- -- E N D -- -

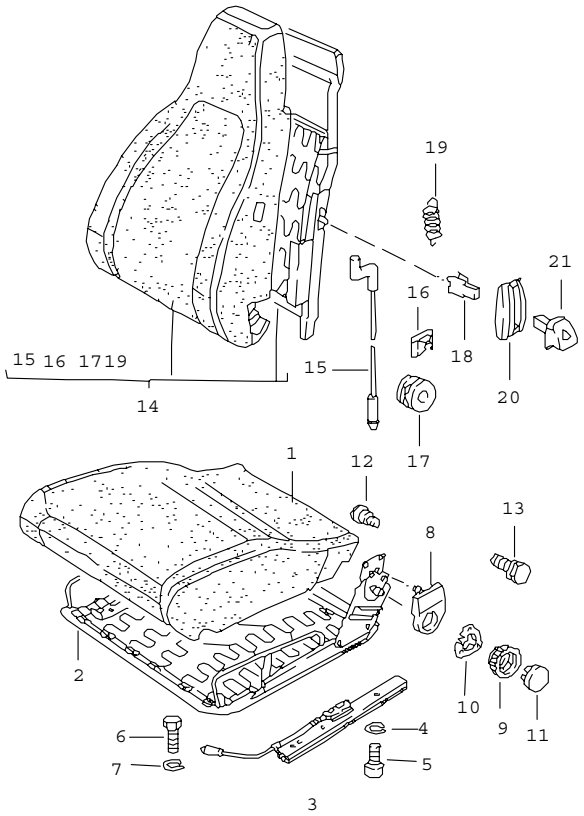

Pos	Part Number	Name	Remarks	Qty	Model
		front seat single parts			
1	911 521 385 01	foam part seat cushion	/L	1	
(1)	E 911 521 386 01	foam part seat cushion	/R	1	
2	911 521 069 56	seat frame	/L	1	
(2)	911 521 070 56	seat frame	/R	1	
3	A 928 521 489 02	seat rail left seat outer with locking device		1	
(3)	A 928 521 490 02	seat rail right seat outer with locking device		1	
(3)	944 521 491 00	seat rail inner see tpi GR.8 NR.34		2	
4	N 012 006 4	lock ring B 6		8	
5	900 067 009 02	pan-head screw M 6 X 15		8	
6	N 010 215 13	hexagon-head bolt M 6 X 15		8	
7	N 012 006 4	lock ring B 6		8	
8	911 521 359 02	cover	/L	1	
(8)	911 521 360 02	cover	/R	1	
9	E 911 521 381 00	shifting wheel for backrest adjustment		2	
10	911 521 571 00	tensioning spring		2	
11	911 521 383 00	cover		2	
12	911 521 371 00	screw		2	
13	911 521 547 00	hexagon-head bolt		4	
14	A 477 881 047	backrest without backrest cover	/L	1	

Pos	Part Number	Name	Remarks	Qty	Model
(14)	A 477 881 048	backrest without backrest cover	/R	1	
15	911 521 361 00	cable release backrest		2	
16	911 521 369 00	terminal for cable		2	
17	911 521 343 00	guide bush		2	
18	311 881 247	clamp		2	
19	311 881 287 A	spring		2	
20	311 881 607 A	rose		2	
21	113 881 633 E	knob		2	
	01C	black			
		- -- E N D -- -			

Model	Year	MG	SG	Illustration	Restrictions	Update	12:48	06.04.2005	PORSCHE PET PORSCHE
924	85	8	08	808-05		187			

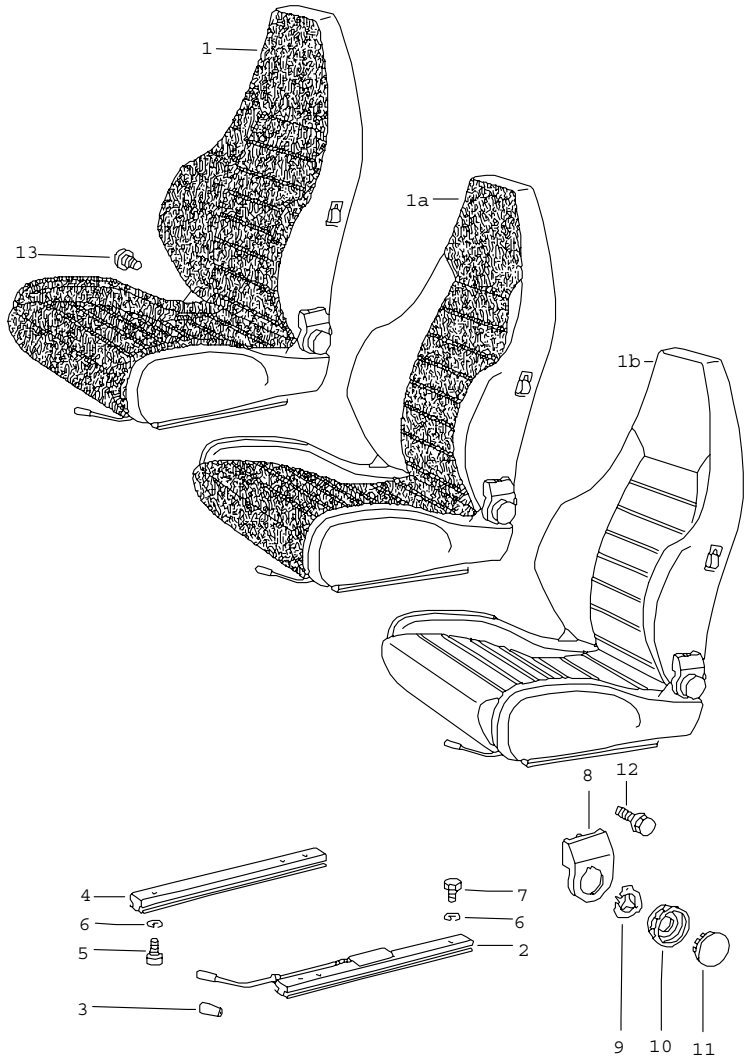

Pos	Part Number	Name	Remarks	Qty	Model
		sports seat complete			
1	A 911 521 007 07	sports seat leatherette/ seat and backrest surface berber cloth	/L	1	
	GE9	black/ grey/black F >>92DN4 02148 F >>93DN1 00189			
	FE3	brown/ beige/brown F >>92DN4 02148 F >>93DN1 00189			
	FE4	beige/ beige/brown	81-82		
	JR8	grey-beige/ grey-beige-grey F >>92DN4 02148 F >>93DN1 00189			
	JM3	black/ grey/black F 92DN4 02149>> F 93DN1 00190>>			
	JM4	brown/ beige/brown F 92DN4 02149>> F 93DN1 00190>>			
	JM9	grey-beige/ grey-beige-grey F 92DN4 02149>> F 93DN1 00190>>			
(1)	A 911 521 008 07	sports seat leatherette/ seat and backrest surface berber cloth	/R	1	
	GE9	black/ grey/black F >>92DN4 02148 F >>93DN1 00189			
	FE3	brown/ beige/brown F >>92DN4 02148 F >>93DN1 00189			
	FE4	beige/ beige/brown	81-82		

Pos	Part Number	Name	Remarks	Qty	Model
	JR8	grey-beige/ grey-beige-grey F >>92DN4 02148 F >>93DN1 00189			
	JM3	black/ grey/black F 92DN4 02149>> F 93DN1 00190>>			
	JM4	brown/ beige/brown F 92DN4 02149>> F 93DN1 00190>>			
	JM9	grey-beige/ grey-beige-grey F 92DN4 02149>> F 93DN1 00190>>			
1	A 911 521 007 07	sports seat leatherette/ seat and backrest surface porsche lettering cloth	/L	1	
	LR1	black/black	84		
	LR2	brown/brown	84		
	LR3	grey-beige/grey-beige	84		
	PX2	black/black	85		
	PX4	brown/brown	85		
	QD9	grey-beige/grey-beige	85		
(1)	A 911 521 008 07	sports seat leatherette/ seat and backrest surface porsche lettering cloth	/R	1	
	LR1	black/black	84		
	LR2	brown/brown	84		
	LR3	grey-beige/grey-beige	84		
	PX2	black/black	85		
	PX4	brown/brown	85		
	QD9	grey-beige/grey-beige	85		
1	A 911 521 007 07	sports seat leatherette/ seat and backrest surface pin stripe velour	/L	1	
	GF4	black/ black-red piping red	81		GT
(1)	A 911 521 008 07	sports seat leatherette/ seat and backrest surface pin stripe velour	/R	1	
	GF4	black/ black-red piping red	81		GT
1A	A 911 521 007 07	sports seat leatherette/ centre part and head rest porsche lettering cloth	/L	1	
	LR6	black/black	84		
	LR7	brown/brown	84		
	LR8	grey-beige/grey-beige	84		
	PX1	black/black	85		
	PX3	brown/brown	85		
	QD8	grey-beige/grey-beige	85		
(1A)	A 911 521 008 07	sports seat leatherette/ centre part and head rest porsche lettering cloth	/R	1	
	LR6	black/black	84		
	LR7	brown/brown	84		
	LR8	grey-beige/grey-beige	84		
	PX1	black/black	85		
	PX3	brown/brown	85		
	QD8	grey-beige/grey-beige	85		
1B	A 911 521 007 64	sports seat leather	/L	1	

Pos	Part Number	Name	Remarks	Qty	Model
	1AJ	black F >>92DN4 02148 F >>93DN1 00189			
	2NF	beige	-82		
	3NG	brown F >>92DN4 02148 F >>93DN1 00189			
	6FL	grey-beige F >>92DN4 02148 F >>93DN1 00189			
	KZ2	black F 92DN4 02149>> F 93DN1 00190>>			
	KZ5	brown F 92DN4 02149>> F 93DN1 00190>>			
	KZ4	grey-beige F 92DN4 02149>> F 93DN1 00190>>			
(1B)	A 911 521 008 64	sports seat leather	/R	1	
	1AJ	black F >>92DN4 02148 F >>93DN1 00189			
	2NF	beige	-82		
	3NG	brown F >>92DN4 02148 F >>93DN1 00189			
	6FL	grey-beige F >>92DN4 02148 F >>93DN1 00189			
	KZ2	black F 92DN4 02149>> F 93DN1 00190>>			
	KZ5	brown F 92DN4 02149>> F 93DN1 00190>>			
	KZ4	grey-beige F 92DN4 02149>> F 93DN1 00190>>			

Pos	Part Number	Name	Remarks	Qty	Model
2	A 928 521 489 02	seat rail left seat outer with locking device	/L	1	
(2)	A 928 521 490 02	seat rail right seat outer with locking device	/R	1	
(3)	911 521 533 01	handle f.longitudinal adjustment		2	
	01C	satin black			
4	944 521 491 00	seat rail inner without locking device see tpi GR.8 NR.34		2	
5	N 014 761 2	pan-head screw M 6 X 12		8	
6	N 012 007 2	lock ring A 6		16	
7	N 010 215 13	hexagon-head bolt M 6 X 15		8	
8	911 521 359 02	cover	/L	1	
(8)	911 521 360 02	cover	/R	1	
9	911 521 571 00	tensioning spring		2	
10	E 911 521 381 00	shifting wheel		2	
11	911 521 383 00	cover		2	
12	911 521 371 00	screw inner		2	
13	911 521 547 00	hexagon-head bolt		4	
		- -- E N D -- -			

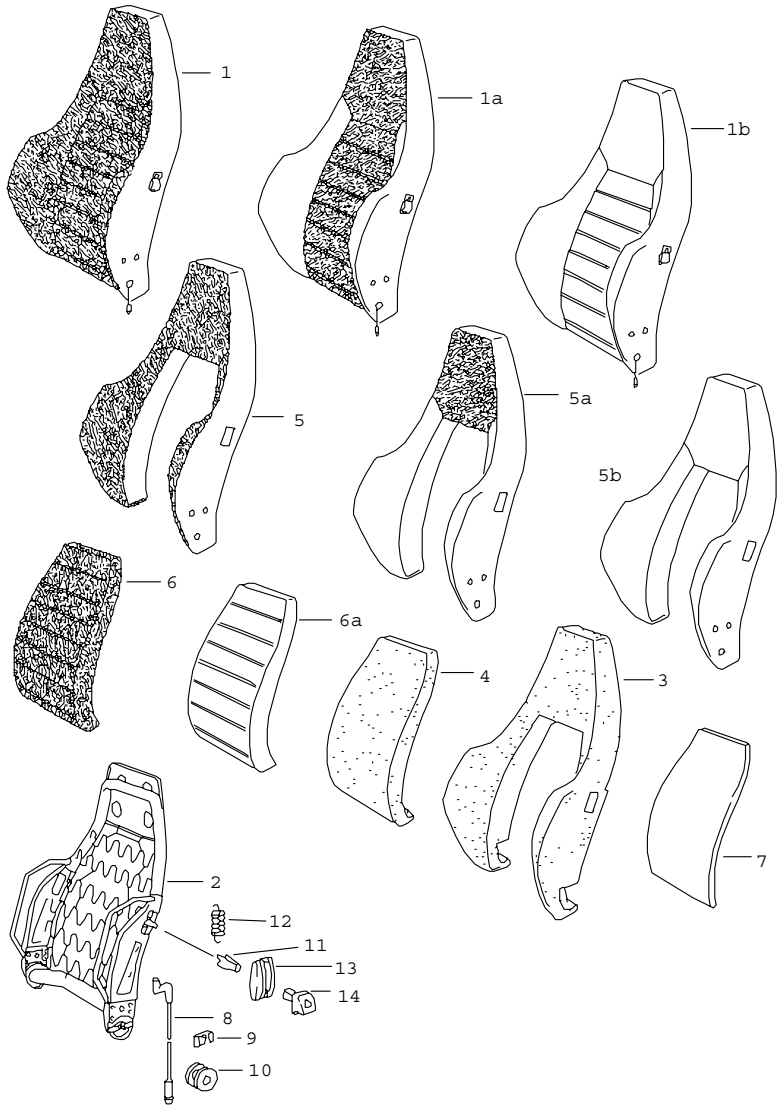

Pos	Part Number	Name	Remarks	Qty	Model
		sports seat backrest and single parts			
1	A 911 521 603 07	backrest leatherette/ backrest surface berber cloth	/L	1	
	GE9	black/ grey/black F >>92DN4 02148 F >>93DN1 00189			
	FE3	brown/ beige/brown F >>92DN4 02148 F >>93DN1 00189			
	FE4	beige/ beige/brown	81-82		
	JR8	grey-beige/ grey-beige-grey F >>92DN4 02148 F >>93DN1 00189			
	JM3	black/ grey/black F 92DN4 02149>> F 93DN1 00190>>			
	JM4	brown/ beige/brown F 92DN4 02149>> F 93DN1 00190>>			
	JM9	grey-beige/ grey-beige-grey			
(1)	A 911 521 604 07	backrest leatherette/ backrest surface berber cloth	/R	1	
	GE9	black/ grey/black F >>92DN4 02148 F >>93DN1 00189			
	FE3	brown/ beige/brown F >>92DN4 02148 F >>93DN1 00189			
	FE4	beige/ beige/brown	81-82		

Pos	Part Number	Name	Remarks	Qty	Model
	JR8	grey-beige/ grey-beige-grey F >>92DN4 02148 F >>93DN1 00189			
	JM3	black/ grey/black F 92DN4 02149>> F 93DN1 00190>>			
	JM4	brown/ beige/brown F 92DN4 02149>> F 93DN1 00190>>			
	JM9	grey-beige/ grey-beige-grey			
1	A 911 521 603 07	backrest leatherette/ backrest surface porsche lettering cloth	/L	1	
	LR1	black/black	84		
	LR2	brown/brown	84		
	LR3	grey-beige/grey-beige	84		
	PX2	black/black	85		
	PX4	brown/brown	85		
	QD9	grey-beige/grey-beige	85		
(1)	A 911 521 604 07	backrest leatherette/ backrest surface porsche lettering cloth	/R	1	
	LR1	black/black	84		
	LR2	brown/brown	84		
	LR3	grey-beige/grey-beige	84		
	PX2	black/black	85		
	PX4	brown/brown	85		
	QD9	grey-beige/grey-beige	85		
1	A 911 521 603 07	backrest leatherette/ backrest surface in cloth pin stripe velour	/L	1	
	GF4	black/ black-red piping red	81		GT
(1)	A 911 521 604 07	backrest leatherette/ backrest surface in cloth pin stripe velour	/R	1	
	GF4	black/ black-red piping red	81		GT
1A	A 911 521 603 07	backrest leatherette/ centre part and head rest porsche lettering cloth	/L	1	
	LR6	black/black	84		
	LR7	brown/brown	84		
	LR8	grey-beige/grey-beige	84		
	PX1	black/black	85		
	PX3	brown/brown	85		
	QD8	grey-beige/grey-beige	85		
(1A)	A 911 521 604 07	backrest leatherette/ centre part and head rest porsche lettering cloth	/R	1	
	LR6	black/black	84		
	LR7	brown/brown	84		
	LR8	grey-beige/grey-beige	84		
	PX1	black/black	85		
	PX3	brown/brown	85		
	QD8	grey-beige/grey-beige	85		
1B	A 911 521 603 53	backrest leather	/L	1	

Pos	Part Number	Name	Remarks	Qty	Model
	1AJ	black F >>92DN4 02148 F >>93DN1 00189			
	2NF	beige	-82		
	3NG	brown F >>92DN4 02148 F >>93DN1 00189			
	6FL	grey-beige F >>92DN4 02148 F >>93DN1 00189			
	KZ2	black F 92DN4 02149>> F 93DN1 00190>>			
	KZ5	brown F 92DN4 02149>> F 93DN1 00190>>			
	KZ4	grey-beige F 92DN4 02149>> F 93DN1 00190>>			
(1B)	A 911 521 604 53	backrest leather	/R	1	
	1AJ	black F >>92DN4 02148 F >>93DN1 00189			
	2NF	beige	-82		
	3NG	brown F >>92DN4 02148 F >>93DN1 00189			
	6FL	grey-beige F >>92DN4 02148 F >>93DN1 00189			
	KZ2	black F 92DN4 02149>> F 93DN1 00190>>			
	KZ5	brown F 92DN4 02149>> F 93DN1 00190>>			
	KZ4	grey-beige F 92DN4 02149>> F 93DN1 00190>>			
2	911 521 613 02	backrest frame	/L	1	
(2)	911 521 614 02	backrest frame	/R	1	
3	911 521 751 02	foam part backrest side part		2	
4	E 911 521 104 02	foam part backrest cushion		2	
5	A 911 521 072 06	backrest side part cover leatherette/ backrest surface berber cloth		2	
	GE9	black/ grey/black F >>92DN4 02148 F >>93DN1 00189			
	FE3	brown/ beige/brown F >>92DN4 02148 F >>93DN1 00189			
	FE4	beige/ beige/brown	81-82		
	JR8	grey-beige/ grey-beige-grey F >>92DN4 02148 F >>93DN1 00189			
	JM3	black/ grey/black F 92DN4 02149>> F 93DN1 00190>>			
	JM4	brown/ beige/brown F 92DN4 02149>> F 93DN1 00190>>			
	JM9	grey-beige/ grey-beige-grey F 92DN4 02149>> F 93DN1 00190>>			
5	A 911 521 072 06	backrest side part cover leatherette/ backrest surface porsche lettering cloth		2	
	LR1	black/black	84		
	LR2	brown/brown	84		
	LR3	grey-beige/grey-beige	84		
	PX2	black/black	85		
	PX4	brown/brown	85		

Pos	Part Number	Name	Remarks	Qty	Model
	QD9	grey-beige/grey-beige	85		
5	A 911 521 072 06	backrest side part cover leatherette/ backrest surface in cloth pin stripe velour		2	
	GF4	black/ black-red piping red	81		GT
5A	A 911 521 072 06	backrest side part cover leatherette/ head rest porsche lettering cloth		2	
	LR6	black/black	84		
	LR7	brown/brown	84		
	LR8	grey-beige/grey-beige	84		
	PX1	black/black	85		
	PX3	brown/brown	85		
	QD8	grey-beige/grey-beige	85		
5B	A 911 521 072 70	backrest side part cover leather		2	
	1AJ	black F >>92DN4 02148 F >>93DN1 00189			
	2NF	beige	-82		
	3NG	brown F >>92DN4 02148 F >>93DN1 00189			
	6FL	grey-beige F >>92DN4 02148 F >>93DN1 00189			
	KZ2	black F 92DN4 02149>> F 93DN1 00190>>			
	KZ5	brown F 92DN4 02149>> F 93DN1 00190>>			
	KZ4	grey-beige F 92DN4 02149>> F 93DN1 00190>>			

Pos	Part Number	Name	Remarks	Qty	Model
6	A 911 521 403 06	backrest cushion cover centre part berber cloth		2	
	1GB	grey/black	81-		
	8NB	beige/brown	81-		
	1FB	grey-beige-grey	83-		
6	A 911 521 403 06	backrest cushion cover centre part pin stripe velour		2	
	2LN	black-red	81		GT
6	A 911 521 403 06	backrest cushion cover centre part porsche lettering cloth		2	
	4CR	black	84		
	6TR	brown	84		
	8RR	grey-beige	84		
	2CZ	black	85		
	7NZ	brown/brown	85		
	5UY	grey-beige	85		
6A	A 911 521 403 50	backrest cushion cover centre part leather		2	
	1AJ	black F >>92DN4 02148 F >>93DN1 00189			
	2NF	beige	-82		
	3NG	brown F >>92DN4 02148 F >>93DN1 00189			
	6FL	grey-beige F >>92DN4 02148 F >>93DN1 00189			
	KZ2	black F 92DN4 02149>> F 93DN1 00190>>			
	KZ5	brown F 92DN4 02149>> F 93DN1 00190>>			

Pos	Part Number	Name	Remarks	Qty	Model
	KZ4	grey-beige F 92DN4 02149>> F 93DN1 00190>>			
7	E 911 521 575 00	cover		2	
8	911 521 361 00	cable release backrest		2	
9	911 521 369 00	terminal cable		2	
10	911 521 343 00	guide bush		2	
11	311 881 247	clamp		2	
12	311 881 287 A	spring		2	
13	911 521 815 00	rose		2	
	01C	satin black			
14	911 521 817 00	control button		2	
	01C	satin black			
		- -- E N D -- -			

Pos	Part Number	Name	Remarks	Qty	Model

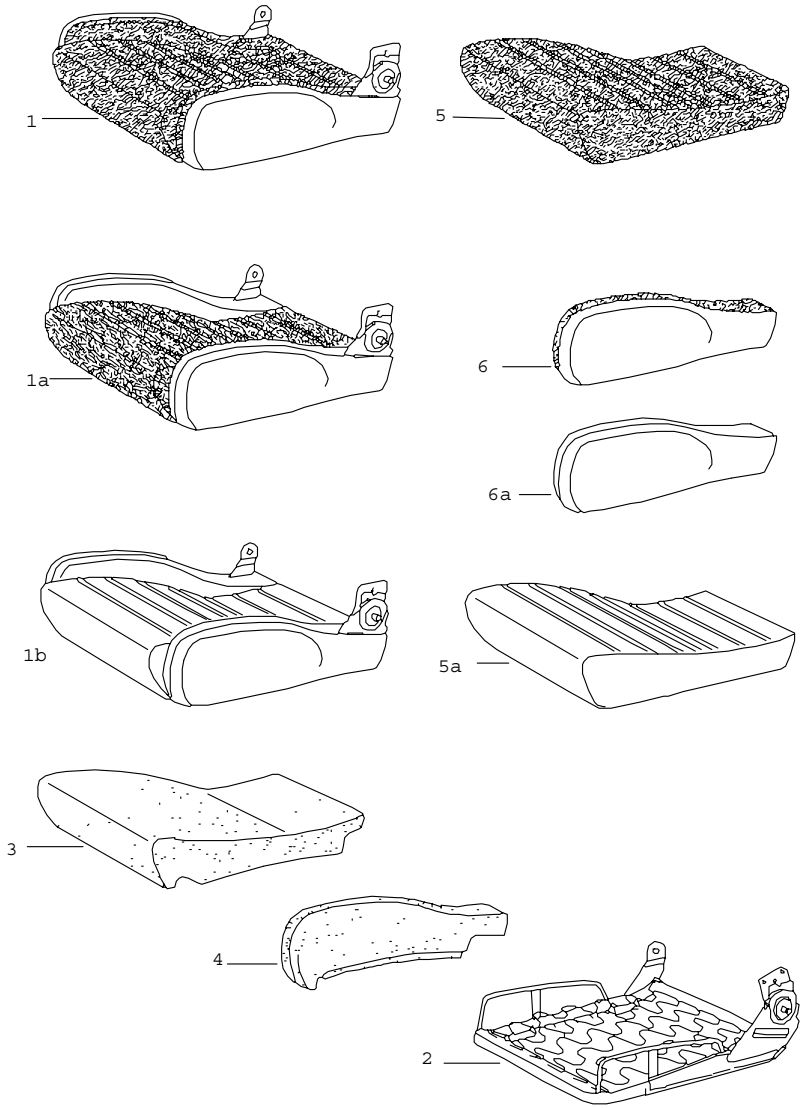

Pos	Part Number	Name	Remarks	Qty	Model
		sports seat cushion and single parts			
1	A 911 521 605 06	seat cushion complete leatherette/ seat surface berber cloth	/L	1	
	GE9	black/ grey/black F >>92DN4 02148 F >>93DN1 00189			924 TURBO
	FE3	brown/ beige/brown F >>92DN4 02148 F >>93DN1 00189			924 TURBO
	FE4	beige/ beige/brown	81-82		
	JR8	grey-beige/ grey-beige-grey F >>92DN4 02148 F >>93DN1 00189			924 TURBO
	JM3	black/ grey/black F 92DN4 02149>> F 93DN1 00190>>			924 TURBO
	JM4	brown/ beige/brown F 92DN4 02149>> F 93DN1 00190>>			924 TURBO
	JM9	grey-beige/ grey-beige-grey F 92DN4 02149>> F 93DN1 00190>>			924 TURBO
(1)	A 911 521 606 06	seat cushion complete leatherette/ seat surface berber cloth	/R	1	
	GE9	black/ grey/black F >>92DN4 02148 F >>93DN1 00189			924 TURBO

Pos	Part Number	Name	Remarks	Qty	Model
	FE3	brown/ beige/brown F >>92DN4 02148 F >>93DN1 00189			924 TURBO
	FE4	beige/ beige/brown	81-82		
	JR8	grey-beige/ grey-beige-grey F >>92DN4 02148 F >>93DN1 00189			924 TURBO
	JM3	black/ grey/black F 92DN4 02149>> F 93DN1 00190>>			924 TURBO
	JM4	brown/ beige/brown F 92DN4 02149>> F 93DN1 00190>>			924 TURBO
	JM9	grey-beige/ grey-beige-grey F 92DN4 02149>> F 93DN1 00190>>			924 TURBO
1	A 911 521 605 06	seat cushion leatherette/ seat surface pin stripe velour	/L	1	
	GF4	black/ black-red piping red	81		GT
(1)	A 911 521 606 06	seat cushion leatherette/ seat surface pin stripe velour	/R	1	
	GF4	black/ black-red piping red	81		GT
1	A 911 521 605 06	seat cushion leatherette/ seat surface porsche lettering cloth	/L	1	
	LR1	black/black	84		
	LR2	brown/brown	84		
	LR3	grey-beige/grey-beige	84		

Pos	Part Number	Name	Remarks	Qty	Model
	PX2	black/black	85		
	PX4	brown/brown	85		
	QD9	grey-beige/grey-beige	85		
(1)	A 911 521 606 06	seat cushion leatherette/ seat surface porsche lettering cloth	/R	1	
	LR1	black/black	84		
	LR2	brown/brown	84		
	LR3	grey-beige/grey-beige	84		
	PX2	black/black	85		
	PX4	brown/brown	85		
	QD9	grey-beige/grey-beige	85		
1A	A 911 521 605 06	seat cushion complete leatherette/ centre part porsche lettering cloth	/L	1	
	LR6	black/black	84		
	LR7	brown/brown	84		
	LR8	grey-beige/grey-beige	84		
	PX1	black/black	85		
	PX3	brown/brown	85		
	QD8	grey-beige/grey-beige	85		
(1A)	A 911 521 606 06	seat cushion complete leatherette/ centre part porsche lettering cloth	/R	1	
	LR6	black/black	84		
	LR7	brown/brown	84		
	LR8	grey-beige/grey-beige	84		
	PX1	black/black	85		
	PX3	brown/brown	85		
	QD8	grey-beige/grey-beige	85		

Pos	Part Number	Name	Remarks	Qty	Model
1B	A 911 521 605 50	seat cushion complete leather	/L	1	
	1AJ	black F >>92DN4 02148 F >>93DN1 00189			924 TURBO
	2NF	beige	-82		
	3NG	brown F >>92DN4 02148 F >>93DN1 00189			924 TURBO
	6FL	grey-beige F >>92DN4 02148 F >>93DN1 00189			924 TURBO
	KZ2	black F 92DN4 02149>> F 93DN1 00190>>			924 TURBO
	KZ5	brown F 92DN4 02149>> F 93DN1 00190>>			924 TURBO
	KZ4	grey-beige F 92DN4 02149>> F 93DN1 00190>>			924 TURBO
(1B)	A 911 521 606 50	seat cushion complete leather	/R	1	
	1AJ	black F >>92DN4 02148 F >>93DN1 00189			924 TURBO
	2NF	beige	-82		
	3NG	brown F >>92DN4 02148 F >>93DN1 00189			924 TURBO
	6FL	grey-beige F >>92DN4 02148 F >>93DN1 00189			924 TURBO
	KZ2	black F 92DN4 02149>> F 93DN1 00190>>			924 TURBO
	KZ5	brown F 92DN4 02149>> F 93DN1 00190>>			924 TURBO

Pos	Part Number	Name	Remarks	Qty	Model
	KZ4	grey-beige F 92DN4 02149>> F 93DN1 00190>>			924 TURBO
2	911 521 621 01	seat frame	/L	1	
(2)	E 911 521 622 01	seat frame	/R	1	
3	E 911 521 697 02	foam part seat cushion		2	
4	911 521 683 02	foam part cushion left seat	/L	1	
(4)	911 521 654 02	foam part cushion left seat	/R	1	
(4)	911 521 653 02	foam part cushion right seat	/L	1	
(4)	E 911 521 684 02	foam part cushion right seat	/R	1	
5	A 911 521 439 06	cover for cushion berber cloth		2	
	1GB	grey/black	81-		
	8NB	beige/brown	81-		
	1FB	grey-beige-grey	83-		
5	A 911 521 439 06	cover for cushion pin stripe velour		2	
	2LN	black-red	81		GT
5	A 911 521 439 06	cover for cushion porsche lettering cloth		2	
	4CR	black	84		
	6TR	brown	84		
	8RR	grey-beige	84		
	2CZ	black	85		
	7NZ	brown	85		
	5UY	grey-beige	85		
5A	A 911 521 439 50	cover for cushion leather		2	

Pos	Part Number	Name	Remarks	Qty	Model
	1AJ	black F >>92DN4 02148 F >>93DN1 00189			924 TURBO
	2NF	beige	-82		
	3NG	brown F >>92DN4 02148 F >>93DN1 00189			924 TURBO
	6FL	grey-beige F >>92DN4 02148 F >>93DN1 00189			924 TURBO
	KZ2	black F 92DN4 02149>> F 93DN1 00190>>			924 TURBO
	KZ5	brown F 92DN4 02149>> F 93DN1 00190>>			924 TURBO
	KZ4	grey-beige F 92DN4 02149>> F 93DN1 00190>>			924 TURBO
6	A 911 521 631 06	seat side part cover left seat leatherette/ seat surface berber cloth	/L	1	
	GE9	black/ grey/black F >>92DN4 02148 F >>93DN1 00189			924 TURBO
	FE3	brown/ beige/brown F >>92DN4 02148 F >>93DN1 00189			924 TURBO
	FE4	beige/ beige/brown	81-82		
	JR8	grey-beige/ grey-beige-grey F >>92DN4 02148 F >>93DN1 00189			924 TURBO
	JM3	black/ grey/black F 92DN4 02149>> F 93DN1 00190>>			924 TURBO
	JM4	brown/ beige/brown F 92DN4 02149>> F 93DN1 00190>>			924 TURBO
	JM9	grey-beige/ grey-beige-grey F 92DN4 02149>> F 93DN1 00190>>			924 TURBO
(6)	A 911 521 632 06	seat side part cover left seat leatherette/ seat surface berber cloth	/R	1	
	GE9	black/ grey/black F >>92DN4 02148 F >>93DN1 00189			924 TURBO
	FE3	brown/ beige/brown F >>92DN4 02148 F >>93DN1 00189			924 TURBO
	FE4	beige/ beige/brown	81-82		
	JR8	grey-beige/ grey-beige-grey F >>92DN4 02148 F >>93DN1 00189			924 TURBO
	JM3	black/ grey/black F 92DN4 02149>> F 93DN1 00190>>			924 TURBO
	JM4	brown/ beige/brown F 92DN4 02149>> F 93DN1 00190>>			924 TURBO
	JM9	grey-beige/ grey-beige-grey F 92DN4 02149>> F 93DN1 00190>>			924 TURBO
(6)	A 911 521 633 06	seat side part cover right seat leatherette/ seat surface berber cloth	/L	1	

Pos	Part Number	Name	Remarks	Qty	Model
	GE9	black/ grey/black F >>92DN4 02148 F >>93DN1 00189			 924 TURBO
	FE3	brown/ beige/brown F >>92DN4 02148 F >>93DN1 00189			 924 TURBO
	FE4	beige/ beige/brown	81-82		
	JR8	grey-beige/ grey-beige-grey F >>92DN4 02148 F >>93DN1 00189			 924 TURBO
	JM3	black/ grey/black F 92DN4 02149>> F 93DN1 00190>>			 924 TURBO
	JM4	brown/ beige/brown F 92DN4 02149>> F 93DN1 00190>>			 924 TURBO
	JM9	grey-beige/ grey-beige-grey F 92DN4 02149>> F 93DN1 00190>>			 924 TURBO
(6)	A 911 521 634 06	seat side part cover right seat leatherette/ seat surface berber cloth	/R	1	
	GE9	black/ grey/black F >>92DN4 02148 F >>93DN1 00189			 924 TURBO
	FE3	brown/ beige/brown F >>92DN4 02148 F >>93DN1 00189			 924 TURBO
	FE4	beige/ beige/brown	81-82		
	JR8	grey-beige/ grey-beige-grey F >>92DN4 02148 F >>93DN1 00189			 924 TURBO
	JM3	black/ grey/black F 92DN4 02149>> F 93DN1 00190>>			 924 TURBO
	JM4	brown/ beige/brown F 92DN4 02149>> F 93DN1 00190>>			 924 TURBO
	JM9	grey-beige/ grey-beige-grey F 92DN4 02149>> F 93DN1 00190>>			 924 TURBO
6	A 911 521 631 06	seat side part cover left seat leatherette/ seat surface pin stripe velour	/L	1	
	GF4	black/ black-red	81		GT
(6)	A 911 521 632 06	seat side part cover left seat leatherette/ seat surface pin stripe velour	/R	1	
	GF4	black/ black-red	81		GT
(6)	A 911 521 633 06	seat side part cover right seat leatherette/ seat surface pin stripe velour	/L	1	
	GF4	black/ black-red	81		GT
(6)	A 911 521 634 06	seat side part cover right seat leatherette/ seat surface pin stripe velour	/R	1	
	GF4	black/ black-red	81		GT
6	A 911 521 631 06	seat side part cover left seat leatherette/ seat surface porsche lettering cloth	/L	1	
	LR1	black/black	84		

Pos	Part Number	Name	Remarks	Qty	Model
	LR2	brown/brown	84		
	LR3	grey-beige/grey-beige	84		
	PX2	black/black	85		
	PX4	brown/brown	85		
	QD9	grey-beige/grey-beige	85		
(6)	A 911 521 632 06	seat side part cover left seat leatherette/ seat surface porsche lettering cloth	/R	1	
	LR1	black/black	84		
	LR2	brown/brown	84		
	LR3	grey-beige/grey-beige	84		
	PX2	black/black	85		
	PX4	brown/brown	85		
	QD9	grey-beige/grey-beige	85		
(6)	A 911 521 633 06	seat side part cover right seat leatherette/ seat surface porsche lettering cloth	/L	1	
	LR1	black/black	84		
	LR2	brown/brown	84		
	LR3	grey-beige/grey-beige	84		
	PX2	black/black	85		
	PX4	brown/brown	85		
	QD9	grey-beige/grey-beige	85		
(6)	A 911 521 634 06	seat side part cover right seat leatherette/ seat surface porsche lettering cloth	/R	1	
	LR1	black/black	84		
	LR2	brown/brown	84		
	LR3	grey-beige/grey-beige	84		
	PX2	black/black	85		
	PX4	brown/brown	85		
	QD9	grey-beige/grey-beige	85		
6A	A 911 521 631 06	seat side part cover left seat leatherette	/L	1	
	LR6	black	84		
	LR7	brown	84		
	LR8	grey-beige	84		
	PX1	black	85		
	PX3	brown	85		
	QD8	grey-beige	85		
(6A)	A 911 521 632 06	seat side part cover left seat leatherette	/R	1	
	LR6	black	84		
	LR7	brown	84		
	LR8	grey-beige	84		
	PX1	black	85		
	PX3	brown	85		
	QD8	grey-beige	85		
(6A)	A 911 521 633 06	seat side part cover right seat leatherette	/L	1	
	LR6	black	84		
	LR7	brown	84		
	LR8	grey-beige	84		
	PX1	black	85		
	PX3	brown	85		
	QD8	grey-beige	85		
(6A)	A 911 521 634 06	seat side part cover right seat leatherette	/R	1	

Pos	Part Number	Name	Remarks	Qty	Model
	LR6	black	84		
	LR7	brown	84		
	LR8	grey-beige	84		
	PX1	black	85		
	PX3	brown	85		
	QD8	grey-beige	85		
6A	A 911 521 631 50	seat side part cover left seat leather	/L	1	
	1AJ	black F >>92DN4 02148 F >>93DN1 00189			 924 TURBO
	2NF	beige	-82		
	3NG	brown F >>92DN4 02148 F >>93DN1 00189			 924 TURBO
	6FL	grey-beige F >>92DN4 02148 F >>93DN1 00189			 924 TURBO
	KZ2	black F 92DN4 02149>> F 93DN1 00190>>			 924 TURBO
	KZ5	brown F 92DN4 02149>> F 93DN1 00190>>			 924 TURBO
	KZ4	grey-beige F 92DN4 02149>> F 93DN1 00190>>			 924 TURBO
(6A)	A 911 521 632 50	seat side part cover left seat leather	/R	1	
	1AJ	black F >>92DN4 02148 F >>93DN1 00189			 924 TURBO
	2NF	beige	-82		
	3NG	brown F >>92DN4 02148 F >>93DN1 00189			 924 TURBO
	6FL	grey-beige F >>92DN4 02148 F >>93DN1 00189			 924 TURBO
	KZ2	black F 92DN4 02149>> F 93DN1 00190>>			 924 TURBO
	KZ5	brown F 92DN4 02149>> F 93DN1 00190>>			 924 TURBO
	KZ4	grey-beige F 92DN4 02149>> F 93DN1 00190>>			 924 TURBO
(6A)	A 911 521 633 50	seat side part cover right seat leather	/L	1	
	1AJ	black F >>92DN4 02148 F >>93DN1 00189			 924 TURBO
	2NF	beige	-82		
	3NG	brown F >>92DN4 02148 F >>93DN1 00189			 924 TURBO
	6FL	grey-beige F >>92DN4 02148 F >>93DN1 00189			 924 TURBO
	KZ2	black F 92DN4 02149>> F 93DN1 00190>>			 924 TURBO
	KZ5	brown F 92DN4 02149>> F 93DN1 00190>>			 924 TURBO
	KZ4	grey-beige F 92DN4 02149>> F 93DN1 00190>>			 924 TURBO
(6A)	A 911 521 634 50	seat side part cover right seat leather	/R	1	
	1AJ	black F >>92DN4 02148 F >>93DN1 00189			 924 TURBO
	2NF	beige	-82		

Pos	Part Number	Name	Remarks	Qty	Model
	3NG	brown			
		F >>92DN4 02148			924
		F >>93DN1 00189			TURBO
	6FL	grey-beige			
		F >>92DN4 02148			924
		F >>93DN1 00189			TURBO
	KZ2	black			
		F 92DN4 02149>>			924
		F 93DN1 00190>>			TURBO
	KZ5	brown			
		F 92DN4 02149>>			924
		F 93DN1 00190>>			TURBO
	KZ4	grey-beige			
		F 92DN4 02149>>			924
		F 93DN1 00190>>			TURBO
		- -- E N D -- -			

Pos	Part Number	Name	Remarks	Qty	Model

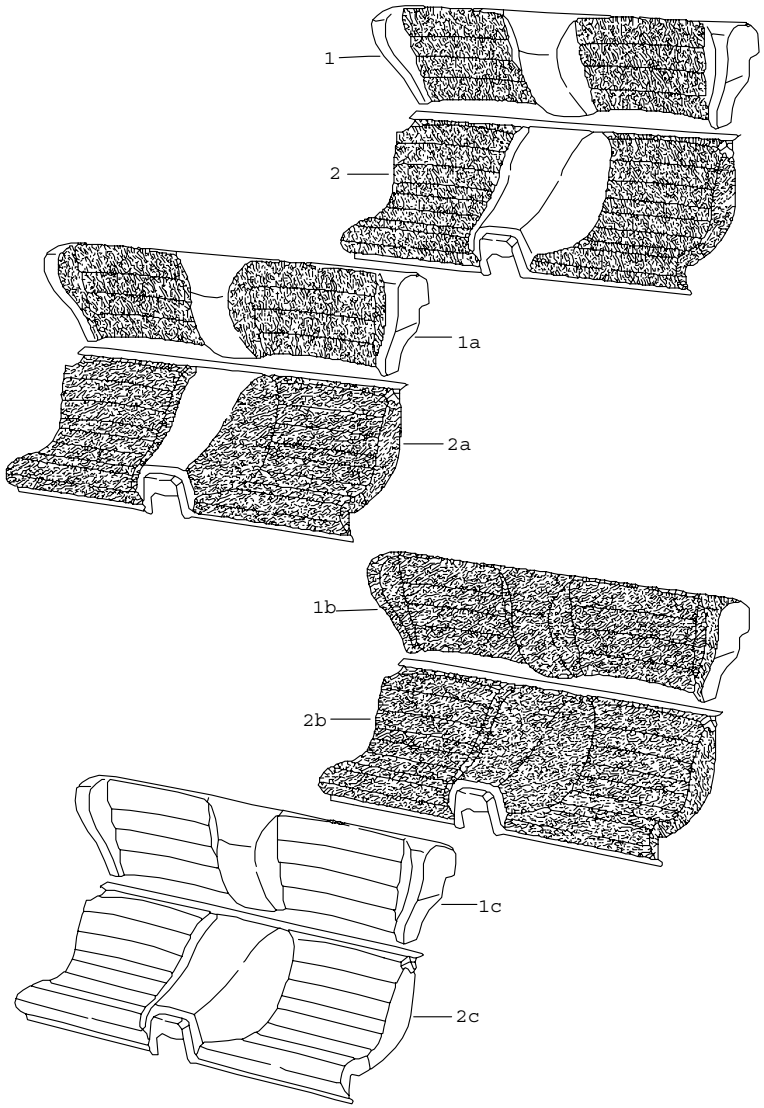

Pos	Part Number	Name	Remarks	Qty	Model
		back seat			
1	A 477 885 037 D	backrest leatherette/ centre part in cloth FISCHGRAET carpet		1	
	DC3	beige/ brown-beige beige	-80		
	DC6	brown/ brown-beige brown	-80		
	DC8	black/ orange black	-80		
1	A 477 885 037 D	backrest leatherette/ centre part in cloth pin stripe velour carpet		1	
	FD5	black/ black-white black F >>92CN4 06384 F >>93CN1 00861			924 TURBO
	FD6	brown/ brown-beige brown F >>92CN4 06384 F >>93CN1 00861			924 TURBO
	FD7	beige/ brown-beige beige F >>92CN4 06384 F >>93CN1 00861			924 TURBO
	GM4	black/ black-white black piping white special model "LE MANS"	81		
1	A 477 885 037 D	backrest leatherette/ centre part in cloth tartan cloth carpet		1	

Pos	Part Number	Name	Remarks	Qty	Model
	EN3	black/ red-blue black			
	EP1	black/ green-blue black			
	EP2	brown/ brown-beige brown			
	EP3	beige/ brown-beige beige			
1	A 477 885 037 D	backrest leatherette/ centre part in cloth checker board velour carpet		1	
	FD8	black/ grey/black black F >>92CN4 06384 F >>93CN1 00861			 924 TURBO
	FD9	brown/ beige/brown brown F >>92CN4 07430 F >>93CN1 00932			 924 TURBO
	FE1	beige/ beige/brown beige F >>92CN4 07430 F >>93CN1 00932			 924 TURBO
1	A 477 885 037 D	backrest leatherette/ centre part in cloth stripe design carpet		1	 M 402
	HS9	black/ silver-black light grey			
1A	A 477 885 037 D	backrest leatherette/ centre part and backrest side part pin stripe velour carpet		1	
	GF4	black/ black-red black piping red	81		GT
1B	A 477 885 037 D	backrest leatherette/ backrest surface berber cloth carpet		1	
	GE9	black/ grey/black black F >>92CN4 06384 F >>93CN1 00861	81-		 924 TURBO
	FE3	brown/ beige/brown brown F >>92CN4 07430 F >>93CN1 00932	81-		 924 TURBO
	FE4	beige/ beige/brown beige F >>92CN4 07430 F >>93CN1 00932	81-		 924 TURBO
1B	A 477 885 037 D	backrest		1	
1C	A 477 885 037 D	backrest leatherette/ carpet		1	
	DD2	beige/ beige F >>92CN4 07430 F >>93CN1 00932			 924 TURBO
	DD4	brown/ brown F >>92CN4 07430 F >>93CN1 00932			 924 TURBO
	DD6	black/ black F >>92CN4 06384 F >>93CN1 00861			 924 TURBO
(1)	A 477 885 037 E	backrest leatherette/ centre part in cloth FISCHGRAET carpet		1	(AUS)

Pos	Part Number	Name	Remarks	Qty	Model
	DC3	beige/ brown-beige beige	-80		
	DC6	brown/ brown-beige brown	-80		
	DC8	black/ orange black	-80		
(1)	A 477 885 037 E	backrest leatherette/ centre part in cloth pin stripe velour carpet		1	(AUS)
	FD5	black/ black-white black F >>92CN4 06384 F >>93CN1 00861			 924 TURBO
	FD6	brown/ brown-beige brown F >>92CN4 07430 F >>93CN1 00932			 924 TURBO
	FD7	beige/ brown-beige beige F >>92CN4 07430 F >>93CN1 00932			 924 TURBO
	GM4	black/ black-white black piping white special model "LE MANS"	 81		
(1)	A 477 885 037 E	backrest leatherette/ centre part in cloth tartan cloth carpet		1	(AUS)
	EN3	black/ red-blue black	-80		
	EP1	black/ green-blue black	-80		
	EP2	brown/ brown-beige brown	-80		
	EP3	beige/ brown-beige beige	-80		
(1)	A 477 885 037 E	backrest leatherette/ centre part in cloth checker board velour carpet		1	(AUS)
	FD8	black/ grey/black black F >>92CN4 06384 F >>93CN1 00861			 924 TURBO
	FD9	brown/ beige/brown brown F >>92CN4 07430 F >>93CN1 00932			 924 TURBO
	FE1	beige/ beige/brown beige F >>92CN4 07430 F >>93CN1 00932			 924 TURBO
(1B)	A 477 885 037 E	backrest leatherette/ backrest surface berber cloth carpet		1	(AUS)
	GE9	black/ grey/black black F >>92CN4 06384 F >>93CN1 00861	81-		 924 TURBO
	FE3	brown/ beige/brown brown F >>92CN4 07430 F >>93CN1 00932	81-		 924 TURBO
	FE4	beige/ beige/brown beige F >>92CN4 07430 F >>93CN1 00932	81-		 924 TURBO

Pos	Part Number	Name	Remarks	Qty	Model
(1C)	A 477 885 037 E	backrest leatherette/ carpet		1	(AUS)
	DD2	beige/ beige F >>92CN4 07430 F >>93CN1 00932			 924 TURBO
	DD4	brown/ brown F >>92CN4 07430 F >>93CN1 00932			 924 TURBO
	DD6	black/ black F >>92CN4 06384 F >>93CN1 00861			 924 TURBO
1	477 885 045 C	backrest leatherette/ centre part in cloth pin stripe velour		1	
	KU8	black/ black-red piping black special model	 82		 924 (CH)
	FD5	black/ black-white F 92CN4 06385>>92DN4 02148 F 93CN1 00862>>93DN1 00189			 924 TURBO
	FD6	brown/ brown-beige F 92CN4 07431>>92DN4 02148 F 93CN1 00933>>93DN1 00189			 924 TURBO
	FD7	beige/ brown-beige F 92CN4 07431>>92CN4 9999 F 93CN1 00933>>93CN1 9999			 924 TURBO
	JR7	grey-beige/ grey-beige-white F >>92DN4 02148 F >>93DN1 00189			
	JN1	black/ black-white F 92DN4 02149>> F 93DN1 00190>>			 924 TURBO
	JN2	brown/ brown-beige F 92DN4 02149>> F 93DN1 00190>>			 924 TURBO
	LD4	grey-beige/ grey-beige-white F 92DN4 02149>> F 93DN1 00190>>			 924 TURBO
1	477 885 045 C	backrest leatherette/ centre part in cloth checker board velour		1	
	FD8	black/ grey/black	-82		
	FD9	brown/ beige/brown F 92CN4 07431>>92CN4 9999 F 93CN1 00933>>93CN1 9999			 924 TURBO
	FE1	beige/ beige/brown F 92CN4 07431>>92CN4 9999 F 93CN1 00933>>93CN1 9999			 924 TURBO
	JR4	black/ light grey-black F >>92DN4 02148 F >>93DN1 00189			
	JR5	brown/ brown-grey F >>92DN4 02148 F >>93DN1 00189			
	JR6	grey-beige/ brown-grey F >>92DN4 02148 F >>93DN1 00189			
	LD5	black/ light grey-black F 92DN4 02149>> F 93DN1 00190>>			 924 TURBO
	LD6	brown/ brown-grey F 92DN4 02149>> F 93DN1 00190>>			 924 TURBO
	LD7	grey-beige/ brown-grey F 92DN4 02149>> F 93DN1 00190>>			 924 TURBO

Pos	Part Number	Name	Remarks	Qty	Model
1B	477 885 045 C	backrest leatherette/ backrest surface berber cloth		1	
	GE9	black/ grey/black F >>92CN4 06384 F >>93CN1 00861			924 TURBO
	FE3	brown/ beige/brown F >>92CN4 06384 F >>93CN1 00861			924 TURBO
	FE4	beige/ beige/brown F 92CN4 07431>>92CN4 9999 F 93CN1 00933>>93CN1 9999			924 TURBO
	JR8	grey-beige/ grey-beige-grey	83-		
1C	477 885 045 C	backrest leatherette		1	
	DD6	black F 92CN4 06385>>92DN4 02148 F 93CN1 00862>>93DN1 00189			924 TURBO
	DD4	brown F 92CN4 07431>>92DN4 02148 F 93CN1 00933>>93DN1 00189			924 TURBO
	DD2	beige F 92CN4 07431>>92CN4 9999 F 93CN1 00933>>93CN1 9999			924 TURBO
	4FK	grey-beige F >>92DN4 02148 F >>93DN1 00189			
	JN3	black F 92DN4 02149>> F 93DN1 00190>>			924 TURBO
	JN4	brown F 92DN4 02149>> F 93DN1 00190>>			924 TURBO
	JN5	grey-beige F 92DN4 02149>> F 93DN1 00190>>			924 TURBO
1	944 522 045 00	backrest leatherette/ centre part in cloth pin stripe velour	84-	1	
	JN1	black/ black-white			
	JN2	brown/ brown-beige			
	LD4	grey-beige/ grey-beige-white			
		centre part in cloth checker board velour			
1	944 522 045 00	backrest leatherette/	84-	1	
	LD5	black/ light grey-black			
	LD6	brown/ brown-grey			
	LD7	grey-beige/ brown-grey			
1	944 522 045 00	backrest leatherette/ centre part porsche lettering cloth	84-	1	
	LR6	black/black	84		
	LR7	brown/brown	84		
	LR8	grey-beige/grey-beige	84		
	NC3	black/ anthracite-burgundy special model	84		TURBO (I)
	PX1	black/black	85		
	PX3	brown/brown	85		
	QD8	grey-beige/grey-beige	85		
1B	944 522 045 00	backrest leatherette/ backrest surface porsche lettering cloth	84-	1	
	LR1	black/black	84		
	LR2	brown/brown	84		
	LR3	grey-beige/grey-beige	84		
	PX2	black/black	85		

Pos	Part Number	Name	Remarks	Qty	Model
	PX4	brown/brown	85		
	QD9	grey-beige/grey-beige	85		
1C	944 522 045 00	backrest leatherette	84-	1	
	JN3	black			
	JN4	brown			
	JN5	grey-beige			
2	477 885 871 B	seat cushion leatherette/ centre part in cloth FISCHGRAET		1	
	DC2	beige/ brown-beige	-80		
	DC5	brown/ brown-beige	-80		
	DC8	black/ orange	-80		
2	477 885 871 B	seat cushion leatherette/ centre part in cloth pin stripe velour		1	
	FD5	black/ black-white F >>92DN4 02148 F >>93DN1 00189			
	FD6	brown/ brown-beige F >>92DN4 02148 F >>93DN1 00189			
	FD7	beige/ brown-beige	-82		
	GM4	black/ black-white piping white special model "LE MANS"	81		
	KU8	black/ black-red piping black special model	82		924 (CH)
	JR7	grey-beige/ grey-beige-white F >>92DN4 02148 F >>93DN1 00189			
	JN1	black/ black-white F 92DN4 02149>> F 93DN1 00190>>			924 TURBO
	JN2	brown/ brown-beige F 92DN4 02149>> F 93DN1 00190>>			924 TURBO
	LD4	grey-beige/ grey-beige-white F 92DN4 02149>> F 93DN1 00190>>			924 TURBO
2	477 885 871 B	seat cushion leatherette/ centre part in cloth tartan cloth		1	
	EN3	black/ red-blue			
	EP1	black/ green-blue			
	EP2	brown/ brown-beige			
	EP3	beige/ brown-beige			
2	477 885 871 B	seat cushion leatherette/ centre part in cloth checker board velour		1	
	FD8	black/ grey/black			
	FD9	brown/ beige/brown			
	FE1	beige/ beige/brown	-82		
	JR4	black/ light grey-black F >>92DN4 02148 F >>93DN1 00189			

Pos	Part Number	Name	Remarks	Qty	Model
	JR5	brown/ brown-grey F >>92DN4 02148 F >>93DN1 00189			
	JR6	grey-beige/ brown-grey F >>92DN4 02148 F >>93DN1 00189			
	LD5	black/ light grey-black F 92DN4 02149>> F 93DN1 00190>>			924 TURBO
	LD6	brown/ brown-grey F 92DN4 02149>> F 93DN1 00190>>			924 TURBO
	LD7	grey-beige/ brown-grey F 92DN4 02149>> F 93DN1 00190>>			924 TURBO
2	477 885 871 B	seat cushion leatherette/ centre part in cloth stripe design		1	
	HS9	black/ silver-black special model	82		
2	477 885 871 B	seat cushion leatherette/ centre part porsche lettering cloth		1	
	LR6	black/black	84		
	LR7	brown/brown	84		
	LR8	grey-beige/grey-beige	84		
	NC3	black/ anthracite-burgundy special model	84		TURBO (I)
	PX1	black/black	85		
	PX3	brown/brown	85		
	QD8	grey-beige/grey-beige	85		
2A	477 885 871 B	seat cushion leatherette/ centre part and cushion pin stripe velour		1	
	GF4	black/ black-red	81		GT
2B	477 885 871 B	seat cushion leatherette/ seat surface berber cloth		1	
	GE9	black/ grey/black			
	FE3	brown/ beige/brown			
	FE4	beige/ beige/brown	-82		
	JR8	grey-beige/ grey-beige-grey			
2B	477 885 871 B	seat cushion leatherette/ seat surface porsche lettering cloth		1	
	LR1	black/black	84		
	LR2	brown/brown	84		
	LR3	grey-beige/grey-beige	84		
	PX2	black/black	85		
	PX4	brown/brown	85		
	QD9	grey-beige/grey-beige	85		
2B	477 885 871 B	seat cushion		1	
2C	477 885 871 B	seat cushion leatherette		1	
	DD2	beige	-82		
	DD4	brown F >>92DN4 02148 F >>93DN1 00189			
	DD6	black F >>92DN4 02148 F >>93DN1 00189			

Pos	Part Number	Name	Remarks	Qty	Model	Pos	Part Number	Name	Remarks	Qty	Model
	4FK	grey-beige									
		F >>92DN4 02148									
		F >>93DN1 00189									
	JN3	black									
		F 92DN4 02149>>			924						
		F 93DN1 00190>>			TURBO						
	JN4	brown									
		F 92DN4 02149>>			924						
		F 93DN1 00190>>			TURBO						
	JN5	grey-beige									
		F 92DN4 02149>>			924						
		F 93DN1 00190>>			TURBO						
		- -- E N D -- -									

Model	Year	MG	SG	Illustration	Restrictions	Update	12:51	06.04.2005	PORSCHE PET PORSCHE
924	85	8	08	808-25		187			

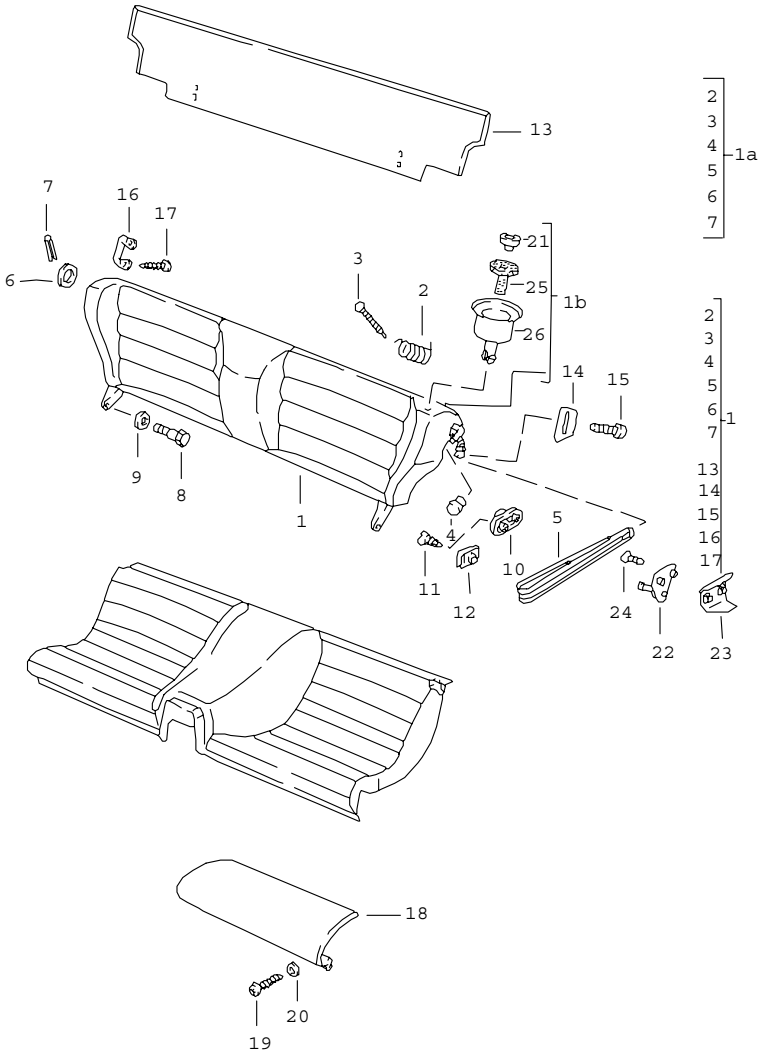

Pos	Part Number	Name	Remarks	Qty	Model
		back seat single parts			
1-1B	-	see group 8/08/20		1	
2	111 885 657	spring for locking hook	-83	1	
3	113 881 899	special tack	-83	1	
4	477 885 699 B	plug for locking hook	/L -83	1	
(4)	477 885 699 C	plug for locking hook	/R -83	1	
5	477 885 667	loop	/L -83	1	
	05T	black			
	21S	brown F >>92DN4 02148 F >>93DN1 00189			924 TURBO
	4FK	grey-beige	83-		
	4RB	brown F 92DN4 02149>> F 93DN1 00190>>			924 TURBO
6	E 477 885 555	cover	-83	1	
7	900 197 010 00	roll pin 3 X 22	-83	1	
8	477 885 767	hexagon-head bolt		2	
9	900 025 007 02	washer A 8,4		2	
10	111 867 329 A	locking lug	/L -83	1	
(10)	E 111 867 330 A	locking lug	/R -83	1	
11	E N 014 002 1	counters. head tapp. screw B 6,3 X 22	-83	4	
12	999 591 327 02	speed nut B 6,3		4	
13	477 885 831 A	cover carpet	-83	1	

Pos	Part Number	Name	Remarks	Qty	Model
	43S	black F >>92CN4 06384 F >>93CN1 00861 F >>93BN7 00450			924 TURBO GT
	3BF	black F 92CN4 06385>> F 93CN1 00862>>			924 TURBO
	83S	beige F >>92CN4 07430 F >>93CN1 00932			924 TURBO
	1NF	beige F 92CN4 07431>> F 93CN1 00933>>	-82		924 TURBO
	87S	brown F >>92CN4 07430 F >>93CN1 00932			924 TURBO
	8NF	brown F 92CN4 07431>> F 93CN1 00933>>			924 TURBO
	8BR	grey	82		
	4BF	grey	83-		
	3FF	grey-beige	83-		
13	944 522 831 00	carpet for back seat backrest	84-	1	
	3BF	black			
	4BF	grey			
	8NF	brown			
	3FF	grey-beige			
14	477 885 865	stop	/L -83	1	
(14)	477 885 866	stop	/R -83	1	
15	N 014 155 1	oval-head screw AM 5 X 22	-83	4	
16	477 885 761	holder		2	
17	N 014 096 3	tapping screw B 4,2 X 22		4	
18	477 885 041 B	back seat extension leatherette	/L	1	(J)
	43S	black			
	83S	beige			
	87S	brown			
(18)	477 885 042 B	back seat extension leatherette	/R	1	(J)
	43S	black			
	83S	beige			
	87S	brown			
19	N 043 940 3	tapping screw 4,2 X 25		6	(J)
20	900 151 028 02	washer 4,3		6	(J)
21	944 522 317 00	push button	84-	2	
	01C	satin black			
22	944 522 029 00	locking lug	/L 84-	1	
(22)	944 522 030 00	locking lug	/R 84-	1	
23	944 522 031 00	support for locking lug	84-	2	
24	999 219 012 07	countersunk-head screw M 6 X 22 self-locking	84-	4	
25	944 522 319 00	guide piece		2	
26	944 522 315 00	rose		2	
	01C	satin black			
		- -- E N D -- -			

Model	Year	MG	SG	Illustration	Restrictions	Update	12:51	06.04.2005	PORSCHE PET PORSCHE
924	85	8	09	809-00		187			

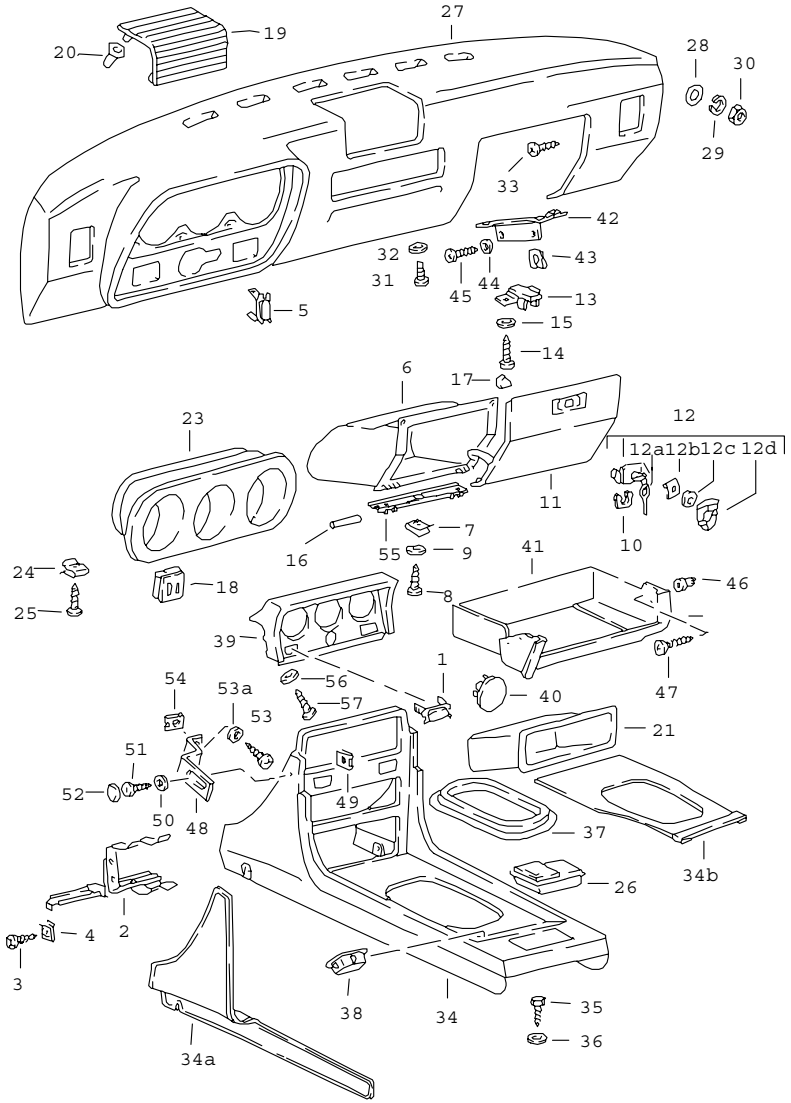

Pos	Part Number	Name	Remarks	Qty	Model
		dashboard centre console			
1	133 957 087	cover		1	
2	477 857 067 A	support centre console		1	
3	N 013 957 5	tapping screw BZ 3,5 X 9,5		2	
4	N 015 422 2	speed nut B 4,2 X 17		2	
5	133 957 087	cover		1	(I)
6	477 857 095 B	glove compartment F >>92DN4 05030 F >>93DN1 00304		1	 924 TURBO
(6)	477 857 095 C	glove compartment F 92DN4 05031>> F 93DN1 00305>>		1	 924 TURBO
7	N 015 422 2	speed nut B 4,2 X 17		2	
8	N 013 964 4	tapping screw B 4,2 X 16		5	
9	N 011 692 3	washer		5	
10	133 857 119	clamp		1	
	01C	black			
11	477 857 123	glove box cover	/LL	1	
	05T	black	-82		
	21S	brown			
	1DB	black	83-		
(11)	478 857 123	glove box cover	/RL	1	
	05T	black	-82		
	21S	brown			
	1DB	black	83-		
11	477 857 123 A	glove box cover	/LL	1	
	4RB	brown	83-		
(11)	478 857 123 A	glove box cover	/RL	1	

Pos	Part Number	Name	Remarks	Qty	Model
	4RB	brown	83-		
12	477 857 133 C	lock with keys		1	
	01C	black			
	90V	brown			
12A	477 857 135 A	blank key		2	
12AA	477 857 136 A	key with stipulated lock-no. state lock number F >>92BN4 03619 F >>93BN1 00653 F >>93BN7 00380		1	
12A	477 857 136 A	key with stipulated lock-no. state lock number		1	
12B	N 012 852 1	clamping washer	82-	1	
12C	N 011 536 1	washer A 2,2	82-	1	
12D	944 559 097 00	emblem	82-	1	
13	477 857 143	lock piece		1	
	01C	black			
14	E 900 143 070 02	oval-head sheetmetal screw B 4,2 X 13		2	
15	900 025 002 02	washer A 4,3		2	
16	N 013 209 2	straight pin 4 H 8 X 36		2	
17	N 020 022 3	plug A 8 X 1		1	
18	477 857 137	cover light switch	/L -82	1	
	01C	black	-82		
	89S	cadbury brown	-82		
18	477 857 137 A	cover light switch	/L	1	
	1DB	black			
	4RB	brown	83-		
(18)	477 857 138	cover switch rear window heating	/R	1	
	01C	black	-82		
	89S	cadbury brown	-82		
(18)	477 857 138 A	cover switch rear window heating	/R	1	
	1DB	black			
	4RB	brown	83-		
19	477 857 183	loudspeaker grille		1	
	8RK	brown			
19	477 857 187	loudspeaker grille		1	
	01C	black			
	1DB	black			
	89S	brown			
20	477 857 821	grommet loudspeaker grille		4	
21	481 857 233 A	package box		1	
23	477 857 283 A	covering for instruments		1	
	01C	black			
	89S	cadbury brown F >>92CN4 02197 F >>93CN1 00305 F >>93BN7 00450	82-		924 TURBO GT
	FP7	black			
	FP8	brown F 92CN4 02198>> F 93CN1 00306>>			924 TURBO
24	999 591 722 02	speed nut B 4,8 X 19,8		2	
25	900 143 046 02	tapping screw B 4,8 X 16		2	
26	944 552 305 00	ashtray		1	
	1DB	black			

Pos	Part Number	Name	Remarks	Qty	Model
	4RB	brown			
27	477 857 881 A	dashboard	/LL	1	
	05T	black	-82		
	21S	brown			
	1DB	black	83-		
(27)	478 857 881 A	dashboard	/RL	1	
	05T	black	-82		
	21S	brown	-82		
	1DB	black	83-		
27	477 857 881 C	dashboard	/LL	1	
	4RB	brown	83-		
(27)	478 857 881 C	dashboard	/RL	1	
	4RB	brown	83-		
28	N 011 612 3	washer R 7		2	
29	N 012 036 1	lock ring 6		2	
30	900 076 010 02	hexagon nut M 6		2	
31	N 014 140 5	oval-head screw AM 6 X 15		1	
32	N 011 524 7	washer A 6,4		1	
33	900 143 007 02	tapping screw B 4,2 X 19		4	
(34)	477 857 909	centre console F >>92CN4 02197 F >>93CN1 00305		1	 924 TURBO
	01C	black			
	89S	cadbury brown			
34	477 857 931	centre console F 92CN4 02198>> F 93CN1 00306>>		1	 924 TURBO
	01C	black			
	89S	cadbury brown			
34	477 857 931 A	centre console	83-	1	
	1DB	black			
	4RB	brown			
34A	477 863 741	lining	/L	1	
	43S	black F >>92CN4 06384 F >>93CN1 00861 F >>93BN7 00450			 924 TURBO GT
	3BF	black F 92CN4 06385>> F 93CN1 00862>>			 924 TURBO
	87S	cadbury brown F >>92CN4 07430 F >>93CN1 00932			 924 TURBO
	8NF	brown F 92CN4 07431>> F 93CN1 00933>>			 924 TURBO
	83S	beige F >>92CN4 07430 F >>93CN1 00932			 924 TURBO
	1NF	beige F 92CN4 07431>> F 93CN1 00933>>	-82		 924 TURBO
	4BF	grey			
	3FF	grey-beige	83-		
	8BR	grey	82		924
(34A)	477 863 742	lining	/R	1	
	43S	black F >>92CN4 06384 F >>93CN1 00861 F >>93BN7 00450			 924 TURBO GT
	3BF	black F 92CN4 06385>> F 93CN1 00862>>			 924 TURBO
	87S	cadbury brown F >>92CN4 07430 F >>93CN1 00932			 924 TURBO

Pos	Part Number	Name	Remarks	Qty	Model
	8NF	brown F 92CN4 07431>> F 93CN1 00933>>			924 TURBO
	83S	beige F >>92CN4 07430 F >>93CN1 00932			924 TURBO
	1NF	beige F 92CN4 07431>> F 93CN1 00933>>	-82		924 TURBO
	4BF	grey			
	3FF	grey-beige	83-		
	8BR	grey	82		924
34B	477 863 749	carpet		1	
	43S	black F >>92CN4 06384 F >>93CN1 00861 F >>93BN7 00450			924 TURBO GT
	3BF	black			
	1DR	black F 92CN4 06385>> F 93CN1 00862>>			924 TURBO
	87S	cadbury brown F >>92CN4 07430 F >>93CN1 00932			924 TURBO
	8NF	brown F 92CN4 07431>> F 93CN1 00933>>			924 TURBO
	83S	beige F >>92CN4 07430 F >>93CN1 00932			924 TURBO
	1NF	beige F 92CN4 07431>> F 93CN1 00933>>	-82		924 TURBO
	4BF	grey			
	3FF	grey-beige	83-		
	8BR	grey	82		
35	N 013 891 1	tapping screw M 8 X 15		2	
36	N 011 533 2	washer B 8,4		2	
37	477 857 975	support frame gearshift lever		1	
	01C	black			
	89S	cadbury brown			
38	911 552 469 00	cover		X	
39	477 857 977	instrument insert		1	
	01C	black			
	89S	cadbury brown F >>92CN4 02197 F >>93CN1 00305			924 TURBO
39	477 857 977 B	instrument insert		1	
	01C	black	-82		
	89S	cadbury brown F 92CN4 02198>> F 93CN1 00306>>	-82		924 TURBO
	1DB	black	83-		
	4RB	brown	83-		
40	841 863 267	cover		X	
	041	black			
41	477 857 836	shelf	/LL	1	
	01C	black			
	89S	brown			
42	477 857 195 A	support	/LL	1	
43	N 015 422 2	speed nut B 4,2 X 17	/LL	2	
44	900 025 002 02	washer A 4,3	/LL	2	
45	N 013 964 4	tapping screw B 4,2 X 16	/LL	2	
46	477 857 173	clip	/LL	1	
47	N 013 971 3	tapping screw B 4,8 X 22	/LL	1	
		POS. 48 - 54 F 92CN4 02198>> F 93CN1 00306>>			924 TURBO

Pos	Part Number	Name	Remarks	Qty	Model
48	477 857 941	bracket		2	
49	N 015 422 2	speed nut		2	
50	900 151 028 02	washer B 4,3		2	
51	311 867 167	tapping screw		2	
52	311 867 169	cap		2	
	01C	black			
	90V	brown			
53	900 143 007 02	tapping screw B 4,2 X 13		2	
53A	E 900 904 013 02	washer A 4,55		2	
54	999 591 850 02	speed nut		2	
55	944 552 195 00	hinge F 92DN4 05031>> F 93DN1 00305>>		1	 924 TURBO
-	E N 013 981 3	tapping screw B 3,9 X 13 F 92DN4 05031>> F 93DN1 00305>>		1	 924 TURBO
56	N 011 535 5	washer A 3,2		2	
57	N 013 953 9	tapping screw B 2,9 X 9,5		2	
		- -- E N D -- -			

Model	Year	MG	SG	Illustration	Restrictions	Update	12:52	06.04.2005	PORSCHE PET PORSCHE
924	85	8	09	809-01		187			

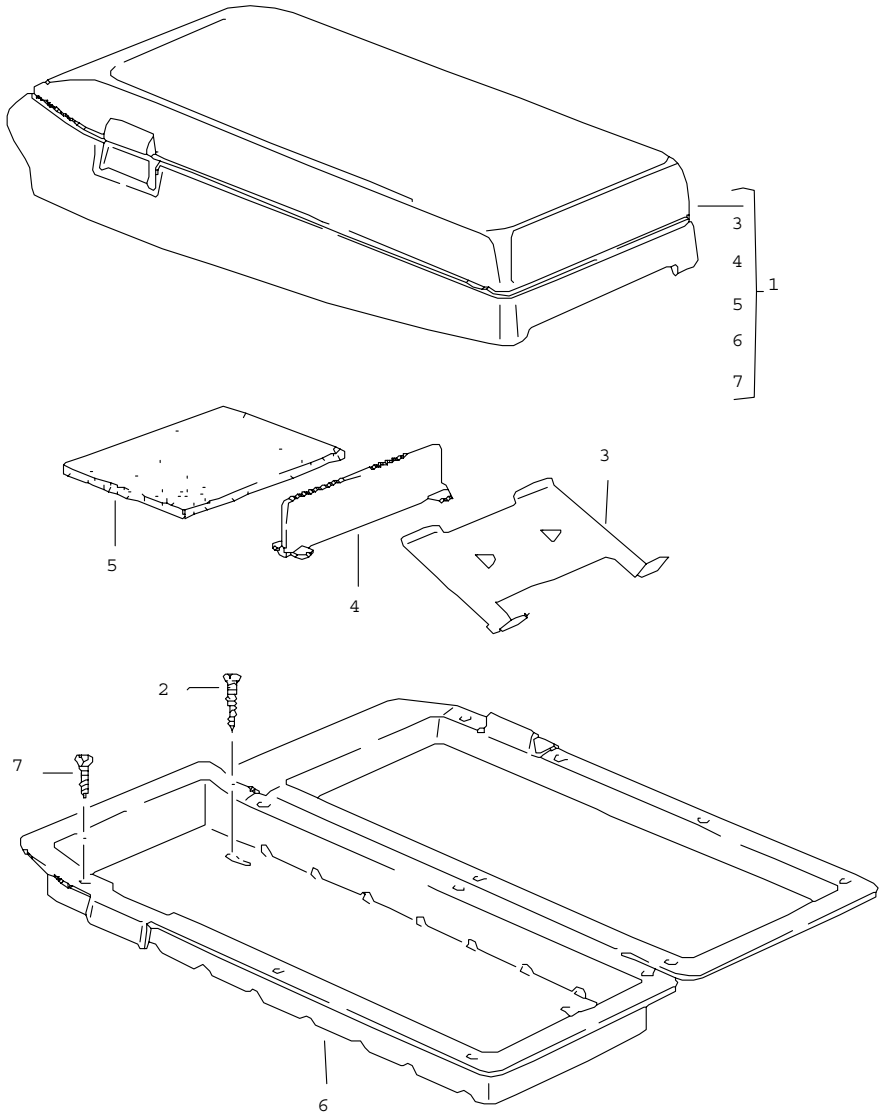

Pos	Part Number	Name	Remarks	Qty	Model
		cassette box			
1	477 857 059	cassette box	/LL	1	
	05T	black			
	4RB	brown			
(1)	478 857 059	cassette box	/RL	1	
	05T	black			
	4RB	brown			
2	999 450 001 07	round head screw B4,2 X 25		4	
3	928 555 731 02	cassette support		6	
	01C	satin black			
4	928 555 741 02	partition panel		1	
5	928 555 735 03	cover		1	
6	928 555 729 03	insert	/LL	1	
	01C	satin black			
(6)	927 555 729 03	insert	/RL	1	
	01C	satin black			
7	900 143 065 07	tapping screw B2,9 X 9,5		14	
		- -- E N D -- -			

Model	Year	MG	SG	Illustration	Restrictions	Update	12:52	06.04.2005	PORSCHE	PET	PORSCHE
924	85	8	09	809-05		187					

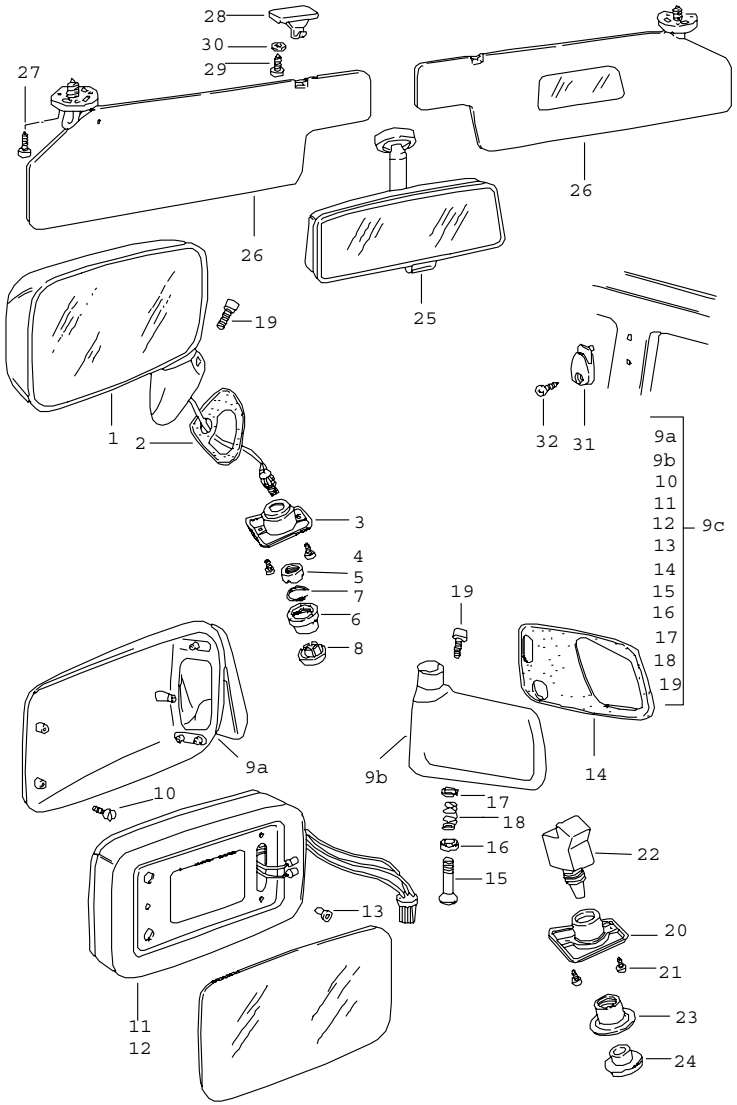

Pos	Part Number	Name	Remarks	Qty	Model
		door mirror interior mirror sun visor			
1	477 857 521 E	door mirror plan	/LL/L	1	
(1)	478 857 522 F	door mirror plan	/RL/R	1	
(1)	477 857 522 B	door mirror convex	/LL/R	1	
(1)	477 857 522 C	door mirror plan	/LL/R	1	
-	477 857 611 B	mirror glass plan		1	
-	477 857 611 C	mirror glass convex		1	(S)
2	477 857 579	desk pad	/L	1	
(2)	478 857 579	desk pad	/R	1	
3	477 867 523	mounting piece		1	
	01C	black			
4	N 014 090 5	tapping screw 3,9 X 13		2	
5	477 857 615	threaded bush		1	
	01C	black			
6	477 857 619	bellows		1	
7	477 857 641	retainer		1	
8	477 857 617	knob		1	
	01C	black			
		door mirror electrically adjustable and heated			
9A	911 731 043 03	mirror housing	/L	1	
(9A)	911 731 044 03	mirror housing	/R	1	
9B	928 731 141 06	mirror base	/LL/L	1	
(9B)	928 731 143 08	mirror base	/LL/R	1	

Pos	Part Number	Name	Remarks	Qty	Model
(9B)	927 731 141 06	mirror base	/RL/R	1	
(9B)	927 731 143 08	mirror base	/RL/L	1	
9C	477 898 027	door mirror plan	/LL/L	1	
(9C)	477 898 028	door mirror plan	/LL/R	1	
(9C)	477 898 029	door mirror convex	/LL/L	1	
(9C)	477 898 030	door mirror convex	/LL/R	1	(S),(N)
(9C)	478 898 027	door mirror plan	/RL/L	1	
(9C)	478 898 028	door mirror plan	/RL/R	1	
(9C)	478 898 029	door mirror convex	/RL/L	1	
10	999 143 003 02	hexagon-head bolt M 5 X 10		3	
11	911 731 027 06	frame	/L -84	1	
(11)	911 731 028 06	frame	/R -84	1	
11	944 731 027 01	frame	85-	2	
12	911 731 035 08	mirror glass plan		1	
(12)	A 911 731 035 09	mirror glass convex	-84	1	
12	911 731 035 09	mirror glass convex		1	
13	999 703 128 40	grommet mirror glass		3	
14	944 731 505 00	desk pad	/LL/L	1	
(14)	944 731 508 00	desk pad	/LL/R	1	
(14)	945 731 506 00	desk pad	/RL/R	1	
(14)	945 731 507 00	desk pad	/RL/L	1	
15	911 731 257 02	guide tube		1	
16	911 731 345 02	adjusting washer lower		1	
17	911 731 347 00	adjusting washer upper		1	
18	911 731 029 01	compression spring		1	
19	999 067 026 07	pan-head screw M 5 X 40 X 25		1	
20	E 477 867 181	mounting piece		1	
21	N 014 090 5	tapping screw 3,9 X 13		2	
22	911 613 115 00	switch		1	
23	928 555 463 02	threaded bush		1	
24	928 613 462 00	knob		1	
		electric equipment for door mirror		1	
-	477 971 111	harness door mirror driver's door		1	
-	477 971 115 A	harness door mirror dashboard	/LL	1	
-	E 478 971 115 A	harness door mirror	/RL	1	
-	477 971 910	bellows see group 8/04/00		1	
		electric equipment for door mirror		2	
-	477 971 115	harness door mirror dashboard	/LL	1	
-	478 971 115	harness door mirror dashboard	/RL	1	
-	477 971 113	harness door mirror passenger's door		1	
-	477 955 703	rocker switch passenger's side	/LL	1	

Pos	Part Number	Name	Remarks	Qty	Model
-	478 955 703	mirror changeover switch passenger's side	/RL	1	
-	803 971 979	plug socket 7-pole		X	
-	477 971 910	bellows see group 8/04/00		2	
-	* 477 898 025	installation set electric adjustable and heatable plan	/LL/L	1	
-	477 898 026	installation set electric adjustable and heatable plan	/LL/R	1	
25	477 857 511	interior mirror		1	
26	477 857 551	sun visor without mirror	/L -84	1	
	05T	black			
	21S	brown F >>92DN4 02148 F >>93DN1 00189			924 TURBO
	4RB	brown F 92DN4 02149>> F 93DN1 00190>>			924 TURBO
(26)	478 857 551 A	sun visor with mirror	/L -84	1	
	05T	black			
	21S	brown F >>92DN4 02148 F >>93DN1 00189			924 TURBO
	4RB	brown F 92DN4 02149>> F 93DN1 00190>>			924 TURBO
(26)	477 857 551 D	sun visor with mirror	/L -84	1	(AUS)
	05T	black			
	21S	brown F >>92DN4 02148 F >>93DN1 00189			924 TURBO
	4RB	brown F 92DN4 02149>> F 93DN1 00190>>			924 TURBO
(26)	477 857 552 C	sun visor with mirror	/R -84	1	
	05T	black			
	21S	brown F >>92DN4 02148 F >>93DN1 00189			924 TURBO
	4RB	brown F 92DN4 02149>> F 93DN1 00190>>			924 TURBO
(26)	477 857 552 A	sun visor without mirror	/R -84	1	
	05T	black			
	21S	brown F >>92DN4 02148 F >>93DN1 00189			924 TURBO
	4RB	brown F 92DN4 02149>> F 93DN1 00190>>			924 TURBO
(26)	477 857 552 B	sun visor without mirror	/R -84	1	(AUS)
	05T	black			
	21S	brown F >>92DN4 02148 F >>93DN1 00189			924 TURBO
	4RB	brown F 92DN4 02149>> F 93DN1 00190>>			924 TURBO
(26)	944 731 031 01	sun visor	/L 85-	1	
	05T	black			
	4RB	brown			
(26)	944 731 032 01	sun visor	/R 85-	1	
	05T	black			
	4RB	brown			
27	N 014 096 3	tapping screw B 4,2 X 22		6	

Pos	Part Number	Name	Remarks	Qty	Model
28	803 857 561 A	support sun visor	-84	2	
(28)	944 731 439 00	support sun visor	85-	2	
29	900 143 047 07	tapping screw B 4,2 X 19		4	
30	900 151 028 02	washer B 4,3		4	
31	171 857 635	coat hook		2	
	01C	black			
32	171 857 650	screw 4,8 X 16		2	
		- -- E N D -- -			

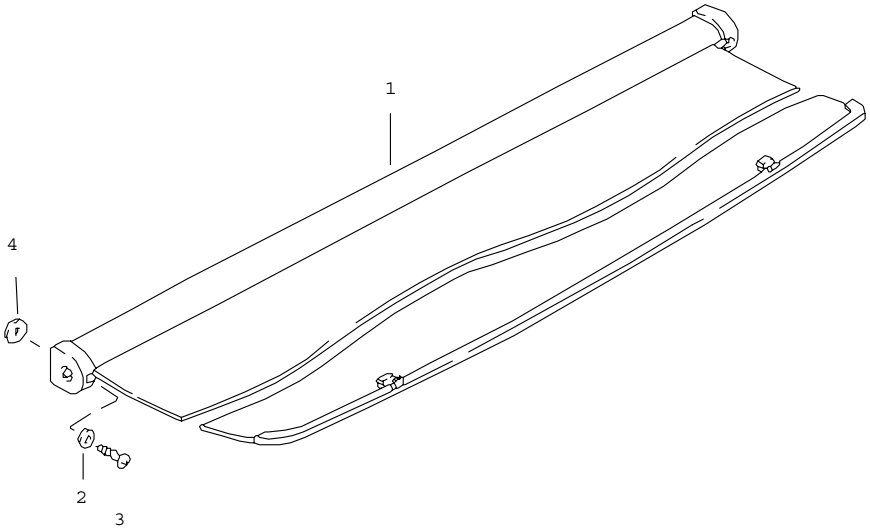

Pos	Part Number	Name	Remarks	Qty	Model
		luggage boot cover			
1	477 863 511 A	luggage boot cover		1	
	05T	black			
	89S	brown			
-	477 863 517 A	housing cover luggage boot cover 17,5 MM breadth of rim	/L	1	
	05T	black			
	89S	brown			
-	477 863 518 A	housing cover luggage boot cover 17,5 MM breadth of rim	/R	1	
	05T	black			
	89S	brown			
-	477 863 517 B	housing cover luggage boot cover 16 MM breadth of rim	/L	1	
	05T	black			
-	477 863 518 B	housing cover luggage boot cover 16 MM breadth of rim	/R	1	
	05T	black			
2	900 025 003 02	washer A 5,3		2	
3	N 013 971 3	tapping screw 4,8 X 22		2	
-	477 863 539	luggage net		1	
4	999 704 139 40	spacer	84-	2	
		- -- E N D -- -			

Model	Year	MG	SG	Illustration	Restrictions	Update	12:52	06.04.2005	PORSCHE PET PORSCHE
924	85	8	10	810-00		187			

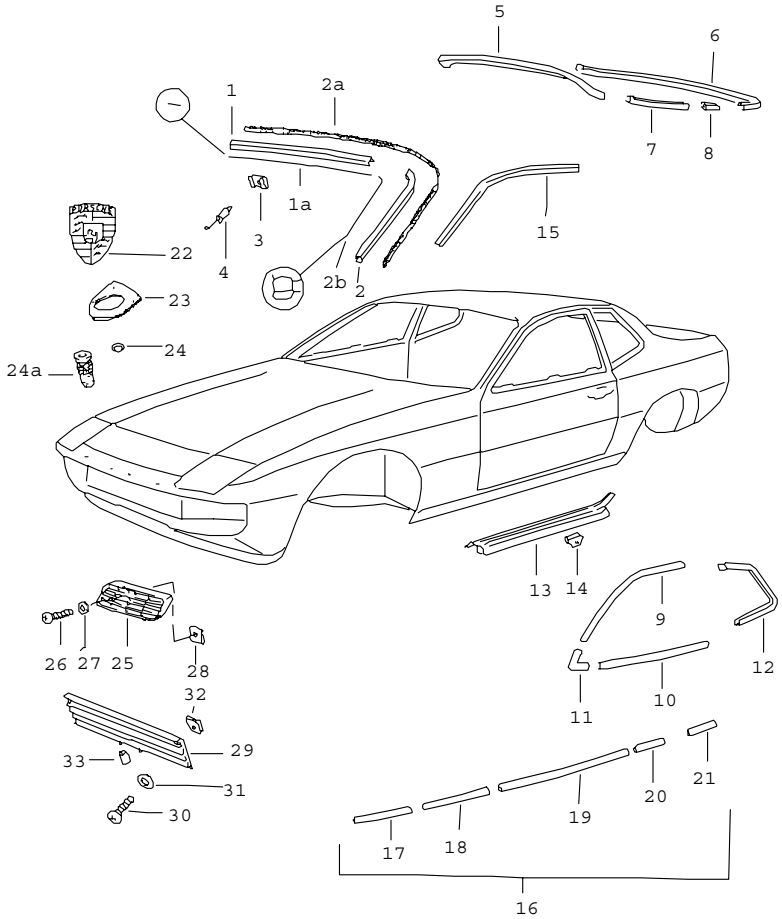

Pos	Part Number	Name	Remarks	Qty	Model
		decorative fittings			
1	477 853 343 A	moulding upper F >>92CN4 02197 F >>93CN1 00305		1	924/TURBO 924 TURBO
1	944 559 043 00	moulding upper		1	
1	937 559 135 00	moulding upper	81	1	GT
1A	944 559 043 00	moulding F 92CN4 02198>> F 93CN1 00306>>	-82	1	924 TURBO
2	477 853 019	moulding	/L	1	
(2)	477 853 020	moulding F >>92CN4 02197 F >>93CN1 00305	/R	1	924 TURBO
2	944 559 045 00	moulding	/L	1	
(2)	944 559 046 00	moulding F 92CN4 02198>> F 93CN1 00306>>	/R	1	924 TURBO
2B	944 559 027 00	gasket	/L	1	
(2B)	944 559 028 00	gasket F 92EN4 00295>>	/R	1	
3	477 853 659 B	clamp		16	
4	431 805 121 A	bolt		16	
5	477 853 313	trim frame upper	/H	1	924
(5)	477 853 313 A	trim frame upper	/H	1	TURBO
(5)	477 853 313 A	trim frame upper	/H	1	924:M 471
6	477 853 311	trim frame lower	/H	1	924
7	477 853 315	trim frame	/L	1	924
(7)	477 853 316	trim frame rear window	/R	1	924
8	477 853 367	sleeve trim frame		4	924

Pos	Part Number	Name	Remarks	Qty	Model
9	477 853 373 B	moulding	/L	1	
(9)	477 853 374 B	moulding door	/R	1	
10	477 853 371 B	moulding	/L	1	
(10)	477 853 372 B	moulding door	/R	1	
11	477 853 375 A	moulding		2	
12	477 853 365 A	trim frame	/L	1	
(12)	477 853 366 A	trim frame	/R	1	
13	477 853 657 A	scuff plate	/L	1	
(13)	477 853 658 A	scuff plate	/R	1	
14	477 853 655	clamp		10	
15	477 853 705	roof moulding	/L	1	
(15)	477 853 706	roof moulding	/R	1	
-	944 559 159 02	plastic foam strip roof moulding		2	
16	* 477 853 995	set of moldings moulding with adhesive tape		1	
17	* 477 853 981	moulding 285 MM	/V/L	1	
(17)	* 477 853 982	moulding 285 MM	/V/R	1	
18	* 477 853 983	moulding 395 MM	/V/L	1	
(18)	* 477 853 984	moulding 395 MM	/V/R	1	
19	* 477 853 985	moulding 1123 MM	/L	1	
(19)	* 477 853 986	moulding 1123 MM	/R	1	
20	* 477 853 987	moulding 285 MM	/H/L	1	
(20)	* 477 853 988	moulding 285 MM	/H/R	1	
21	* 477 853 989	moulding 440 MM	/H/L	1	
(21)	* 477 853 990	moulding 440 MM	/H/R	1	
22	A 901 559 210 20	lid emblem		1	
22	993 559 211 00	lid emblem		1	
23	901 559 215 20	desk pad		1	
24	999 591 423 03	tapping nut F >>92CN4 06040 F >>93CN1 00841		2	 924 TURBO
24A	A 999 702 175 50	grommet		2	
24A	999 702 175 50	grommet F 92CN4 06041>> F 93CN1 00842>>		2	 924 TURBO
25	E 477 853 381	ventilation grille		4	TURBO
26	N 013 953 9	tapping screw		4	TURBO
27	900 025 001 02	washer		4	TURBO
28	N 015 428 1	speed nut		4	TURBO
(29)	944 559 135 00	radiator grille		1	
30	900 143 064 07	tapping screw B 3,5 X 25		2	
31	900 151 028 02	washer 4,3		2	
32	N 015 438 1	speed nut B 3,5 X 16,5		2	
33	477 853 661	grommet		2	
		- -- E N D -- -			

Model	Year	MG	SG	Illustration	Restrictions	Update	12:53	06.04.2005	PORSCHE PET PORSCHE
924	85	8	10	810-05		187			

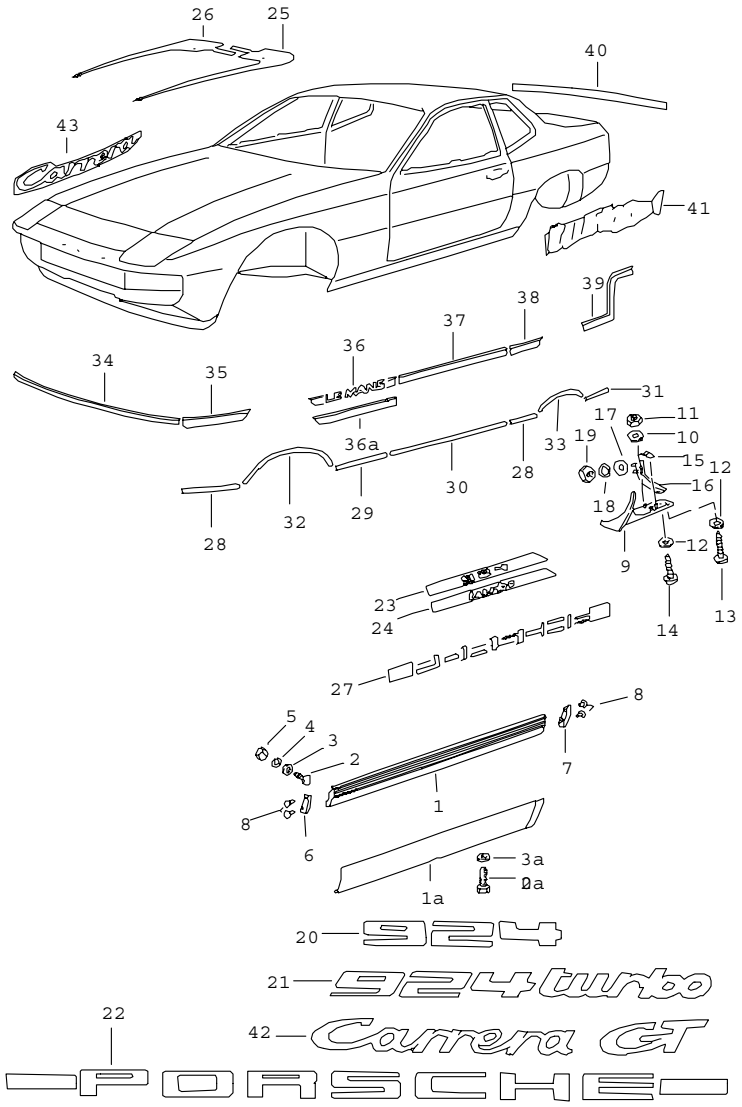

Pos	Part Number	Name	Remarks	Qty	Model
		sill cover insignias wheel opening			
1	477 853 727 A	sill cover	/L	1	924/TURBO
(1)	477 853 728 A	sill cover	/R	1	924/TURBO
1A	937 559 727 00	sill cover	/L	1	GT
(1A)	937 559 728 00	sill cover	/R	1	GT
2	477 809 683	screw		2	924/TURBO
2A E	999 217 018 07	hexagon-head bolt M 5 X 12		6	GT
3	N 011 525 13	washer A 8,4		2	924/TURBO
3A	937 559 127 00	washer		6	GT
4	N 012 038 1	lock ring 8		2	924/TURBO
5	900 076 025 02	hexagon nut M 8		2	924/TURBO
(6)	477 853 735 A	cap	/V/L /H/R	2	924/TURBO
(7) E	477 853 736 A	cap	/V/R /H/L	2	924/TURBO
8	N 900 921 01	blind rivet 5 X 8		8	924/TURBO
9	477 853 383	wheel cover	/L	1	
(9)	477 853 384	wheel cover	/R	1	
10	N 011 692 3	washer 5,1		8	
(10)	211 853 611	sealing washer		6	
11	N 021 196 1	lock nut M 5		8	
12	900 025 002 02	washer		4	
13	N 013 964 4	tapping screw B 4,2 X 16		2	
14	900 143 031 02	oval-head sheetmetal screw B 4,2 X 9,5		2	
15	N 012 068 1	clamping washer		2	

Pos	Part Number	Name	Remarks	Qty	Model
16	477 853 405	support		2	
17	900 025 003 02	washer A 5,3		4	
18	N 012 005 3	lock ring B 5		4	
19	N 011 005 14	hexagon nut M 5		4	
20	E 477 853 625 B	logo adhesive film black	/H	1	924
(20)	E 477 853 625 C	logo adhesive film silver	/H	1	924
21	E 477 853 627 B	logo adhesive film black	/H	1	TURBO
(21)	E 477 853 627 C	logo adhesive film silver	/H	1	TURBO
22	477 853 635 B	logo adhesive film black	/H	1	
22	477 853 635 C	logo adhesive film silver	/H	1	
23	E 477 853 721 B	logo adhesive film door sill	/L	1	924
(23)	477 853 722 B	logo adhesive film door sill	/R	1	924
24	E 477 853 721	logo adhesive film door sill	/L	1	TURBO
(24)	E 477 853 722	logo adhesive film door sill	/R	1	TURBO
25	E 477 853 665	logo -S- adhesive film light cover	/L /V	1	924:M 471
(25)	E 477 853 665 A	logo -S- adhesive film dark cover	/L /V	1	924:M 471
26	477 853 666	logo -S- adhesive film light cover	/R /V	1	924:M 471
(26)	477 853 666 A	logo -S- adhesive film dark cover	/R /V	1	924:M 471
27	E 911 559 319 06	logo porsche adhesive film black hatched		2	
(27)	911 559 319 07	logo porsche adhesive film white hatched		2	
		stripe upper moulding black			
-	477 853 641	lateral straight		*	
28	-	300 MM		4	
29	-	420 MM		2	
30	-	1150 MM		2	
31	-	500 MM		2	
32	477 853 637	wheel opening	/L	1	
(32)	E 477 853 638	wheel opening	/R	1	
33	477 853 639	wheel opening	/L	1	
(33)	477 853 640	wheel opening	/R	1	
		stripe upper moulding beige	-80		

Pos	Part Number	Name	Remarks	Qty	Model
-	477 853 641 AA	lateral straight		*	
28	-	300 MM		4	
29	-	420 MM		2	
30	-	1150 MM		2	
31	-	500 MM		2	
32	E 477 853 637 AA	wheel opening	/L	1	
(32)	E 477 853 638 AA	wheel opening	/R	1	
33	E 477 853 639 AA	wheel opening	/L	1	
(33)	E 477 853 640 AA	wheel opening	/R	1	
		stripe upper moulding red	-80		
-	477 853 641 BA	lateral straight		*	
28	-	300 MM		4	
29	-	420 MM		2	
30	-	1150 MM		2	
31	-	500 MM		2	
32	477 853 637 BA	wheel opening	/L	1	
(32)	E 477 853 638 BA	wheel opening	/R	1	
33	477 853 639 BA	wheel opening	/L	1	
(33)	477 853 640 BA	wheel opening	/R	1	
		stripe upper moulding brown	81-		
-	E 477 853 641 CA	lateral straight		*	
28	-	300 MM		4	
29	-	420 MM		2	
30	-	1150 MM		2	
31	-	500 MM		2	
32	E 477 853 637 CA	wheel opening	/L	1	
(32)	E 477 853 638 CA	wheel opening	/R	1	
33	E 477 853 639 CA	wheel opening	/L	1	
(33)	477 853 640 CA	wheel opening	/R	1	
		stripe upper moulding grey	81-		
-	477 853 641 DA	lateral straight		*	
28	-	300 MM		4	
29	-	420 MM		2	
30	-	1150 MM		2	
31	-	500 MM		2	
32	E 477 853 637 DA	wheel opening	/L	1	
(32)	477 853 638 DA	wheel opening	/R	1	
33	477 853 639 DA	wheel opening	/L	1	
(33)	477 853 640 DA	wheel opening	/R	1	
		stripe upper moulding green	81-		
-	477 853 641 EA	lateral straight		*	
28	-	300 MM		4	
29	-	420 MM		2	
30	-	1150 MM		2	
31	-	500 MM		2	
32	477 853 637 EA	wheel opening	/L	1	
(32)	E 477 853 638 EA	wheel opening	/R	1	
33	E 477 853 639 EA	wheel opening	/L	1	
(33)	477 853 640 EA	wheel opening	/R	1	
		stripe upper moulding GABUNGRAU	82-		
-	E 477 853 641 FA	lateral straight		*	

Pos	Part Number	Name	Remarks	Qty	Model
28	-	300 MM		4	
29	-	420 MM		2	
30	-	1150 MM		2	
31	-	500 MM		2	
32	E 477 853 637 FA	wheel opening	/L	1	
(32)	E 477 853 638 FA	wheel opening	/R	1	
33	E 477 853 639 FA	wheel opening	/L	1	
(33)	477 853 640 FA	wheel opening	/R	1	
		stripe yellow-black-red	81 82		LE MANS (CH)
34	E 477 853 643	decorative film	/V	1	
35	477 853 643 A	decorative film	/L	1	
(35)	477 853 643 B	decorative film	/R	1	
36	477 853 643 C	decorative film	/L	1	LE MANS
36A	E 477 853 643 M	decorative film	/L	1	(CH)
(36)	477 853 643 D	decorative film	/R	1	LE MANS
(36A)	477 853 643 N	stripe	/R	1	(CH)
37	E 477 853 643 E	decorative film	/L	1	
(37)	477 853 643 F	decorative film	/R	1	
38	477 853 643 G	decorative film	/L	1	
(38)	477 853 643 H	decorative film	/R	1	
39	477 853 643 J	decorative film	/L	1	
(39)	477 853 643 K	decorative film	/R	1	
40	477 853 643 L	decorative film		1	
41	477 853 633	logo adhesive film dolomite grey side section	/L /H	1	TURBO
(41)	E 477 853 634	logo adhesive film dolomite grey side section	/R /H	1	TURBO
42	E 937 559 217 00	logo adhesive film black	/H	1	GT
42	E 937 559 217 01	logo adhesive film red	/H	1	GT
43	E 937 559 212 00	logo adhesive film black wing	/R /V	1	GT
43	937 559 212 01	logo adhesive film red wing	/R /V	1	GT

- -- E N D -- -

Model	Year	MG	SG	Illustration	Restrictions	Update	12:53	06.04.2005	PORSCHE PET PORSCHE
924	85	8	11	811-00		187			

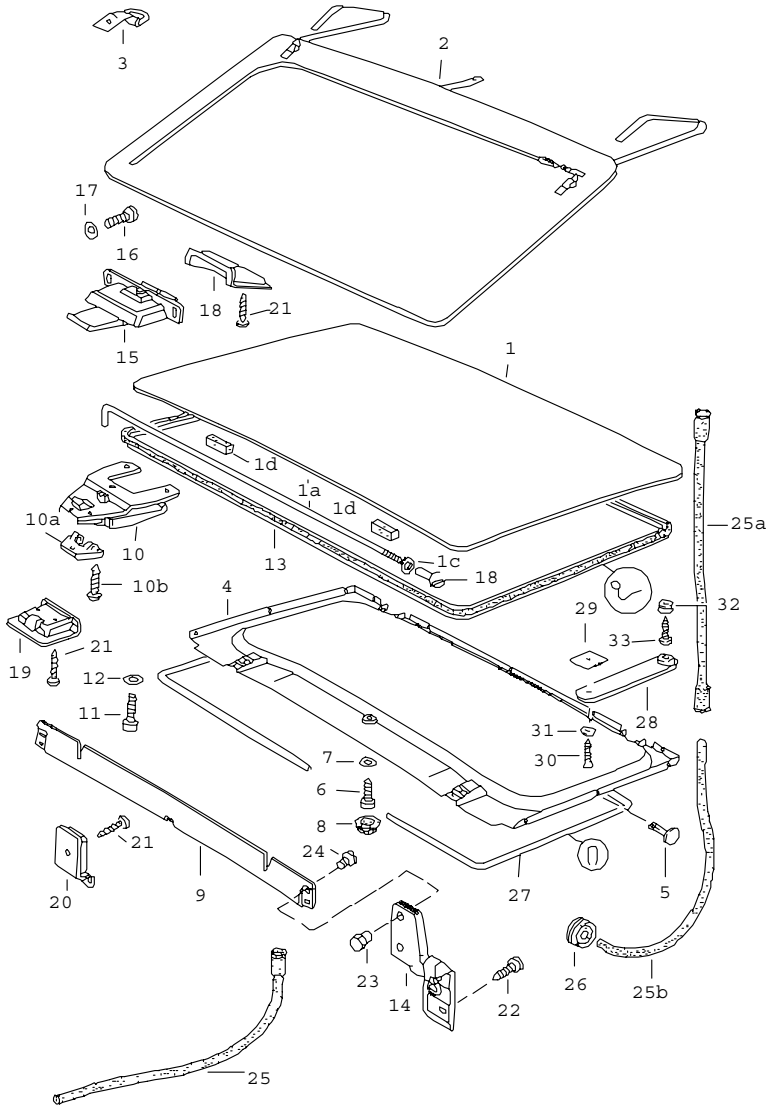

Pos	Part Number	Name	Remarks	Qty	Model
		roof	-83		+M 650
1	477 871 021	roof		1	
1A	477 871 761	tensioning device		1	
1B	477 871 763 A	threaded sleeve		1	
1C	N 011 524 7	washer B 6		1	
1D	477 871 789	sealing strip		2	
2	477 871 027	pocket		1	
	05T	black			
	21S	brown F >>92DN4 02148 F >>93DN1 00189			924 TURBO
2	477 871 027	pocket		1	
	4RB	brown F 92DN4 02149>> F 93DN1 00190>>			924 TURBO
3	477 871 029	support pocket		1	
	041	black			
	90V	dark brown			
4	477 871 047 B	lining		1	
	05T	black			
	21S	brown	-82		
	4RB	brown	83-		
	1DB	black			
5	477 871 053	clip		11	
6	311 867 167	tapping screw 4,2		1	
7	900 151 028 02	washer 4,3		1	
8	311 867 169	cap		1	
	01C	black			
	90V	brown			

Pos	Part Number	Name	Remarks	Qty	Model
9	944 564 993 00	air deflector		1	
10	477 871 217	roof catch	/V	2	
10A	477 871 219	bearing bracket		2	
	01C	black			
10B	N 033 174 1	countersunk-head screw 3 X 6		6	
11	N 033 018 1	lens-head screw M 5 X 12		2	
12	999 704 605 07	cone washer		2	
(13)	944 564 114 01	gasket		1	
14	477 871 635 A	hinge	/L	1	
(14)	477 871 636 A	hinge	/R	1	
15	477 871 649	roof catch	/H	2	
16	900 146 003 02	oval-head screw AM 5 X 11		8	
17	N 012 222 4	spring washer B 5		8	
18	477 871 651 A	locking bracket		2	
19	477 871 665 A	centring wedge	/V	2	
20	477 871 683 A	bearing		1	
21	N 013 964 4	tapping screw B 4,2 X 16		9	
22	900 143 031 02	oval-head sheetmetal screw B 4,2 X 9,5		4	
23	477 871 701 A	cap nut		4	
24	477 837 959	self-lock. fillister screw		4	
25	321 877 233 C	water drain hose	/V	2	
25A	944 564 235 00	water drain hose	/L/H	1	
25B	944 564 237 00	water drain tube	/L/H	1	
(25A)	944 564 064 00	water drain hose	/R/H	1	
(25B)	944 564 238 00	water drain tube	/R/H	1	
26	021 119 569	rubber sleeve		X	
27	944 564 621 00	protective edging		1	
28	477 871 501	securing strap		1	
	43S	black			
	87S	brown F >>92DN4 02148 F >>93DN1 00189			924 TURBO
	4RB	brown F 92DN4 02149>> F 93DN1 00190>>			924 TURBO
29	477 871 505	reinforcement plate		1	
30	N 014 091 4	tapping screw B 3,9 X 16		1	
31	N 011 590 1	cone washer		1	
32	477 871 509	ball knob		1	
33	900 143 003 00	tapping screw B 3,5 X 16		1	
34	E 477 871 159	lever		2	
35	E N 013 327 1	roll pin 3 X 18		2	

- -- E N D -- -

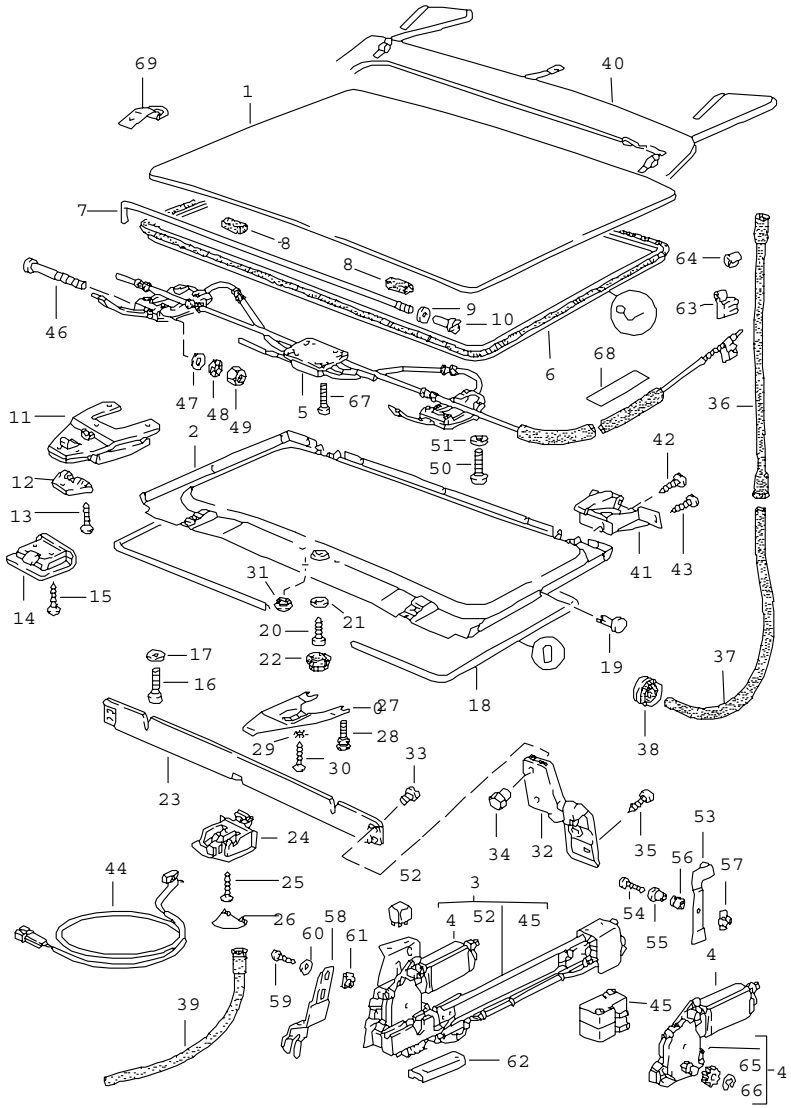

Pos	Part Number	Name	Remarks	Qty	Model
		lifting roof	84-		+M 650
1	944 564 021 01	roof		1	
2	944 564 047 00	lining		1	
	05T	black			
	4RB	brown			
3	944 624 055 00	electric drive		1	
4	944 624 011 00	electric motor		1	
5	944 564 941 00	assembly kit see tpi group 8 NR. 43		1	
6	944 564 114 01	gasket		1	
7	477 871 761	tensioning device		2	
8	477 871 789	sealing strip		2	
9	N 012 226 5	spring washer B 6		2	
10	477 871 763 A	threaded sleeve		2	
11	477 871 217	roof catch	/V	2	
12	477 871 219	bearing bracket		2	
	01C	black			
13	N 033 174 1	countersunk-head screw M 3 X 6		6	
14	477 871 665 A	centring wedge	/V	2	
15	N 013 964 4	tapping screw B 4,2 X 16		4	
16	N 033 018 1	lens-head screw M 5 X 12		2	
17	999 704 605 07	cone washer		2	
18	944 564 621 00	protective edging		1	
19	477 871 053	clip		11	
20	311 867 167	tapping screw		1	
21	900 151 028 02	washer		1	

Pos	Part Number	Name	Remarks	Qty	Model
22	311 867 169	cap		1	
	01C	black			
	90V	brown			
23	944 564 093 00	air deflector		1	
24	944 564 683 00	bearing centre		1	
25	N 013 964 4	tapping screw 4,2 X 16		1	
26	944 564 685 00	flap		1	
27	944 564 223 00	fastening part centre		1	
28	944 564 224 00	adjusting screw		2	
29	N 012 222 4	spring washer A 5		1	
30	N 014 133 8	oval-head screw M 5 X 12		1	
31	944 564 233 00	cap		3	
	01C	black			
	90V	brown			
32	477 871 635 A	hinge	/L	1	
(32)	477 871 636 A	hinge	/R	1	
33	477 837 959	self-lock. fillister screw		4	
34	477 871 701 A	cap nut		4	
35	900 143 031 02	oval-head sheetmetal screw B 4,2 X 9,5		4	
36	944 564 235 00	water drain hose	/L/H	1	
(36)	944 564 064 00	water drain hose	/R/H	1	
37	944 564 237 00	water drain tube	/L/H	1	
(37)	944 564 238 00	water drain tube	/R/H	1	
38	021 119 569	rubber sleeve		X	
39	321 877 233 C	water drain hose	/V	2	
40	477 871 027	pocket		1	
	05T	black			
	4RB	brown			
41	944 564 161 00	guide	/L/H	1	
(41)	944 564 162 00	guide	/R/H	1	
42	N 014 133 8	oval-head screw M 5 X 12		2	
43	N 014 264 4	oval-head screw AM 5 X 10		4	
44	944 613 033 00	microswitch centre	/V	1	
45	944 613 127 00	microswitch		2	
46	N 100 718 01	pan-head screw M 5 X 70		2	
47	900 025 003 02	washer A 5,3		2	
48	N 012 104 2	serrated lock washer 5,3		2	
49	N 011 005 14	hexagon nut M 5		2	
50	999 218 005 02	pan-head screw M 6		4	
51	N 011 524 7	washer A 6,4		4	
52	431 951 253 D	relay electric drive		2	
53	944 564 521 00	support		1	
54	E N 013 967 5	tapping screw BZ 4,2 X 19		1	
55	944 624 415 00	spacer sleeve		1	
56	944 624 417 00	rubber sleeve		1	
57	N 902 577 01	speed nut B 4,2		1	
58	944 564 433 00	support		1	
59	N 013 884 4	tapping screw BZ 4,8 X 13		2	

Pos	Part Number	Name	Remarks	Qty	Model	Pos	Part Number	Name	Remarks	Qty	Model
60	E N 012 201 2	washer 5,5		2							
61	999 591 722 02	speed nut B 4,8 X 19		2							
62	944 564 517 00	cover		1							
63	944 564 425 01	driver		1							
64	E 944 564 427 00	clamping sleeve		1							
64	E 944 564 427 00	clamping sleeve		1							
65	944 564 437 00	pinion		1							
66	900 116 003 02	circlip		1							
67	N 014 745 2	pan-head screw M 6 X 14, MICROVERKAPSELT		4							
68	944 556 441 00	felt strip		2							
		- -- E N D -- -									

Model	Year	MG	SG	Illustration	Restrictions	Update	12:53	06.04.2005	PORSCHE PET PORSCHE
924	85	8	12	812-00		187			

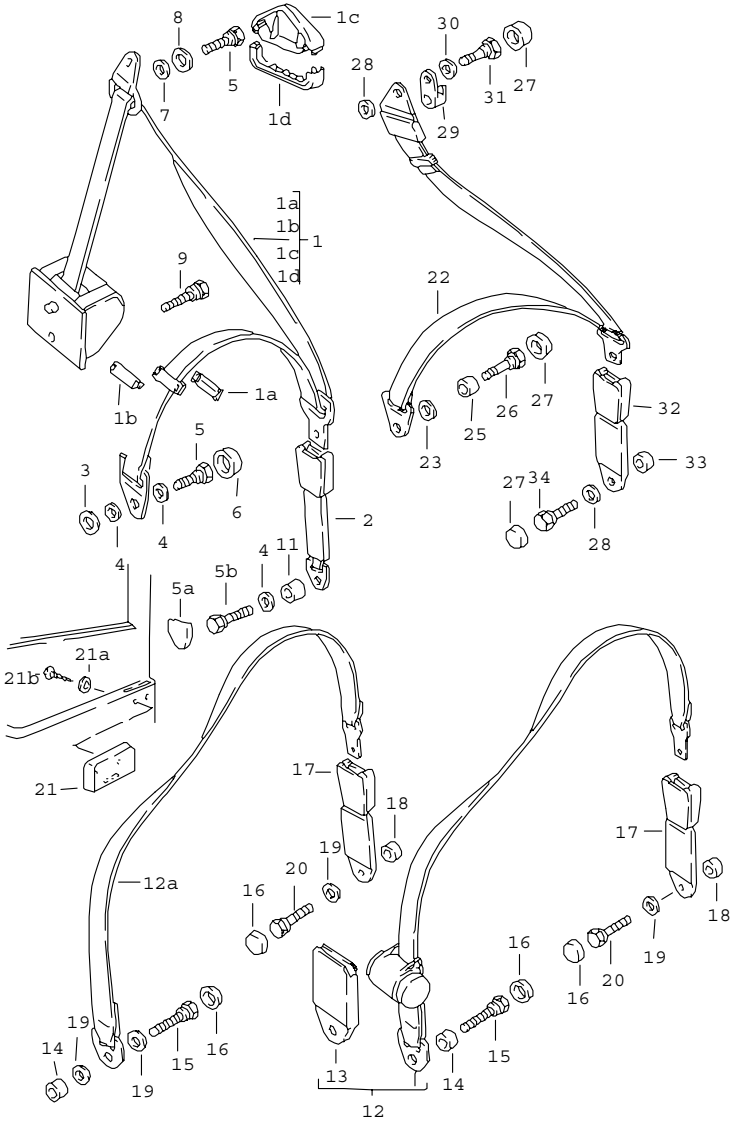

Pos	Part Number	Name	Remarks	Qty	Model
		seat belt			
1	477 857 705 E	seat belt	/L -84	1	
(1)	477 857 705 G	seat belt	/L -84	1	(AUS)
1	944 803 125 00	seat belt	/L 85-	1	
(1)	477 857 706 E	seat belt	/R -84	1	
(1)	477 857 706 G	seat belt	/R -84	1	(AUS)
1	944 803 126 00	seat belt	/R 85-	1	
1A	928 803 151 02	clip upper part		2	
1B	928 803 153 02	clip lower part		2	
1C	928 803 141 00	cover		2	
1D	928 803 143 00	cover		2	
(1C)	944 803 141 00	cover	86	1	
	70B	black			
2	928 803 183 05	seat-belt buckle	-84	2	
(2)	928 803 183 11	seat-belt buckle	85-	2	
3	111 857 707 A	spacer		2	
4	911 803 533 00	cup spring		2	
5	111 857 793 E	fastening screw		4	
5A	477 857 889	cap		2	
5B	111 857 793 E	fastening screw		2	
6	811 857 845	cap 11,5		2	
7	928 803 212 02	spacer		2	
8	W 928 803 157 02	washer		2	
9	111 857 799 A	fastening screw		2	
11	928 803 259 02	spacer sleeve		2	
		lap belt automatic	-81		
12	E 477 857 787 B	belt		2	

Pos	Part Number	Name	Remarks	Qty	Model
13	477 857 750 B	cap		2	
14	901 803 116 40	spacer sleeve 4 MM	-80	2	924
(14)	928 803 259 02	spacer sleeve 12 MM	-80 81-	2	TURBO 924 M 603 924
15	111 857 793 E	fastening screw 30 MM	-80	2	924
(15)	803 019 811 B	screw 36,5 MM	-80 81-	2	TURBO 924 M 603 924
16	811 857 845	cap		4	
17	477 857 739 A	seat-belt buckle		2	
18	477 857 643	spacer sleeve		2	
19	211 857 771	washer		2	
20	477 857 853	screw		2	
		lap belt manual	82-		
12A	477 857 795	lap belt		2	
14	928 803 259 02	spacer sleeve		2	
15	111 857 793 E	fastening screw		4	
16	811 857 845	cap		4	
17	477 857 739 A	seat-belt buckle		2	
18	477 857 643	spacer sleeve		2	
19	211 857 771	washer		6	
20	477 857 853	screw		2	
21	477 857 375 A	support for seatbelt		2	
	01C	black			
	89S	brown			
21A	900 151 027 02	washer B 5,3 X 15		4	
21B	900 146 003 02	oval-head screw M 5 X 11		4	

Pos	Part Number	Name	Remarks	Qty	Model
		three-point seat belt rear			
22	E 478 857 811 A	seat belt manual		2	(AUS)
(1)	945 803 021 00	seat belt	/L	1	(AUS) (N)
1	945 803 021 01	seat belt automatic	/L	1	(AUS)(N) (SF)
(1)	945 803 022 01	seat belt automatic	/R	1	(AUS)(N) (SF)
23	477 857 823	reducing ring		2	
25	901 803 114 40	spacer tube 8 MM		2	
26	111 857 799 A	fastening screw 20 MM	-80	2	
(26)	111 857 799	screw 30 MM	-80 81-	2	TURBO 924 M 603 924
27	811 857 845	cap		6	
28	211 857 771	washer		4	
8	928 803 157 02	washer	1.84-	2	
7	945 803 311 00	spacer ring		2	
31	111 857 793 E	fastening screw		2	
32	477 857 739 A	seat-belt buckle		2	
33	477 857 643	spacer sleeve		2	
34	477 857 853	screw		2	
(9)	911 803 150 00	screw	/H 1.84-	2	
		- -- E N D -- -			

Model	Year	MG	SG	Illustration	Restrictions	Update	12:54	06.04.2005	PORSCHE PET PORSCHE
924	85	8	13	813-00		187			

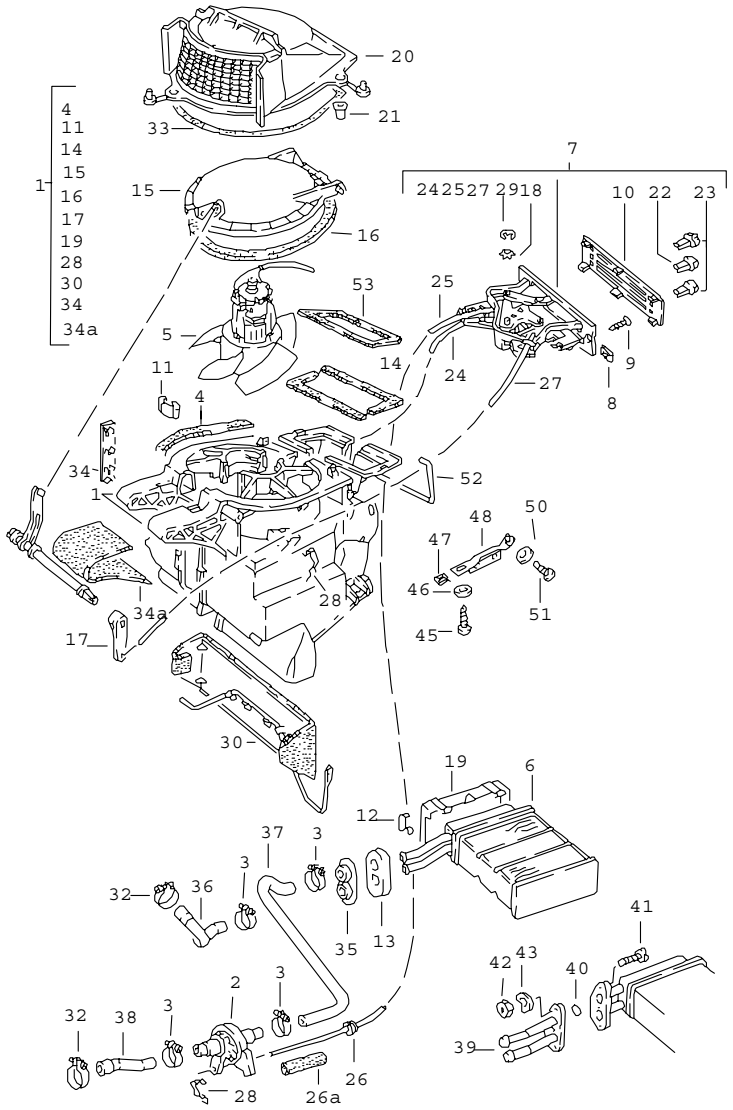

Pos	Part Number	Name	Remarks	Qty	Model
		heater heat exchanger			
		F >>92CN4 02197 F >>93CN1 00305 F >>93BN7 00450			924 TURBO GT
1	E 477 819 014	flap control box		1	
2	477 819 017	heater valve		1	
3	999 512 346 00	hose clamp LC 16-25		5	
4	321 819 019	gasket		2	
5	321 819 021	blower motor		1	
6	477 819 030	heat exchanger		1	
7	477 819 021	control switch		1	
-	999 920 006 07	clamp		2	
-	477 819 057	support		1	
8	477 819 789	speed nut 16 X 12,2		4	
9	E N 014 100 1	tapping screw B 4,8 X 25		4	
10	477 819 043 B	cover		1	
11	321 819 053	clamp		2	
12	321 819 059	clamp		7	
13	477 819 065	damping piece		1	
14	321 819 089	gasket air duct		2	
15	321 819 107	flap		1	
16	321 819 109	gasket flap		1	
17	321 819 123	lever flap		1	
-	321 819 117	lever		1	
	01C	black flap upper			
18	477 819 139	cup spring		2	

Pos	Part Number	Name	Remarks	Qty	Model
19	477 819 347	cover heat exchanger		1	
20	477 819 245	cover flap		1	
21	477 819 253	grommet		3	
22	477 819 319	knob centre		1	
23	477 819 319 A	knob		2	
24	477 819 279	traction F >>92BN4 02099 F >>93BN1 00344 F >>93BN7 00106		1	
24	477 819 279 A	traction F 92BN4 02100>> F 93BN1 00345>> F 93BN7 00107>>		1	
25	477 819 341	traction		1	
26	477 819 849	grommet		1	
26A	477 819 340	hose		1	
27	477 819 325	traction for flap		1	
28	477 819 343	spring clamp		1	
29	900 116 003 02	circlip 4		2	
30	E 321 819 361	flap		1	
32	999 512 272 02	hose clamp LA 25 X 40		1	
-	E AMV 152 109 03	sealing cord 9 MM $ roller 4,5 METER 740 MM		X 1	
34	321 819 645	clip		1	
34A	477 819 345	sealing strip		1	
35	823 819 699 A	drain bush		1	
36	477 819 723	hose		1	
37	477 819 725	hose		1	

Pos	Part Number	Name	Remarks	Qty	Model
-	N 020 269 1	hose		*	924
38	-	85 MM		1	
(38)	931 106 271 01	water hose		1	TURBO
39	477 819 869	connecting flange for heat exchanger		1	
40	021 101 173	sealing ring heat exchanger		2	
41	N 010 296 2	hexagon-head bolt M 5 X 18		3	
42	N 011 005 14	hexagon nut M 5		3	
43	N 012 222 4	spring washer A 5		3	
45	N 013 968 7	tapping screw B 4,8 X 16		1	
46	N 012 104 2	serrated lock washer A 5,3		1	
47	999 591 722 02	speed nut B 4,8 X 19		1	
48	477 857 195	bracket		1	
(48)	477 857 197	bracket		1	
50	N 011 524 7	washer A 6,4		1	
51	N 014 140 5	oval-head screw AM 6 X 15		1	
52	477 857 809	clamp	-81	1	
(52)	477 857 809	clamp	82-	1	
53	477 857 887 A	gasket		1	
54	478 959 519	switch	/RL	1	M 573
55	477 959 517	rose	/RL	1	M 573
56	477 959 513	knob	/RL	1	M 573
		- -- E N D -- -			

Model	Year	MG	SG	Illustration	Restrictions	Update	12:54	06.04.2005	PORSCHE	PET	PORSCHE
924	85	8	13	813-05		187					

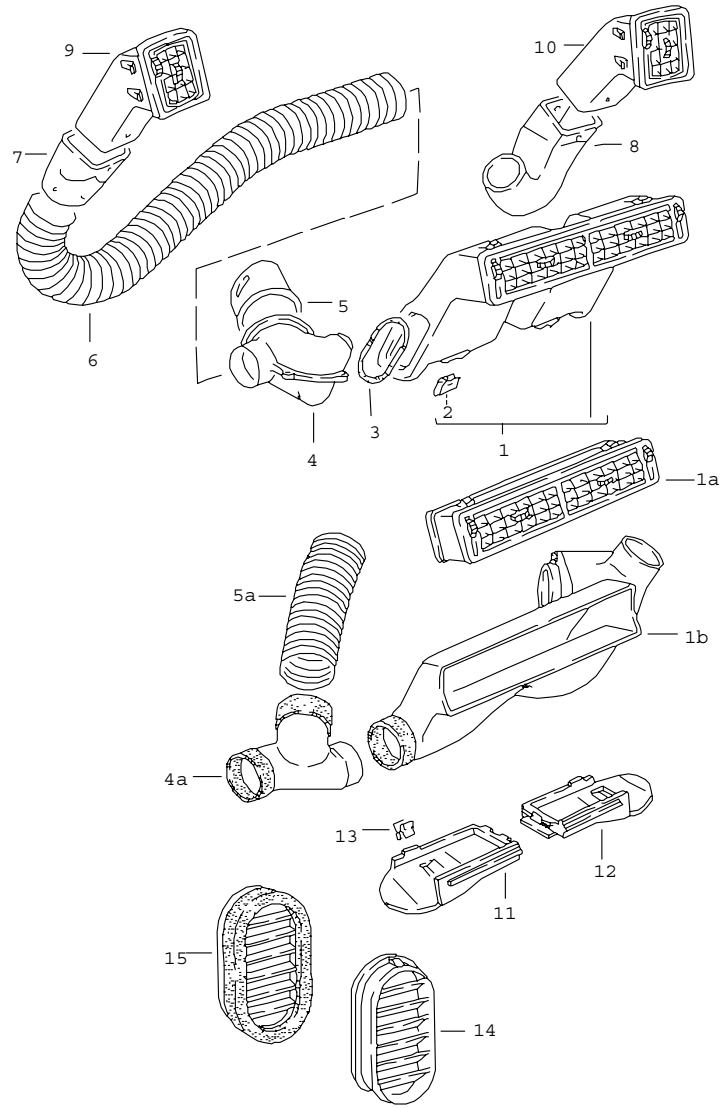

Pos	Part Number	Name	Remarks	Qty	Model
		air vent air hose			
		F >>92CN4 02197 F >>93CN1 00305 F >>93BN7 00450			924 TURBO GT
1	477 819 151	centre nozzle F >>92BN4 09218 F >>93BN1 01667		1	
	01C	black			
	89S	cadbury brown			
1A	477 819 173 A	centre nozzle F 92BN4 09219>> F 93BN1 01668>>		1	
	01C	black			
	89S	brown			
1B	477 820 361	mixing chamber F 92BN4 09219>> F 93BN1 01668>>	/LL	1	
(1B)	478 820 361	mixing chamber F 92BN4 09219>> F 93BN1 01668>>	/RL	1	
2	E 477 819 263	clamp F >>92BN4 09218 F >>93BN1 01667		2	
3	477 819 229 A	gasket F >>92BN4 09218 F >>93BN1 01667		2	
4	477 819 219 A	air distributor F >>92BN4 09218 F >>93BN1 01667		2	
4A	477 820 539	intermediate piece F 92BN4 09219>> F 93BN1 01668>>		1	
5	477 819 223	connecting piece F >>92BN4 09218 F >>93BN1 01667	/L	1	
5A	478 820 235	air hose F 92BN4 09219>> F 93BN1 01668>>		1	
(5)	477 819 224	connecting piece F >>92BN4 09218 F >>93BN1 01667	/R	1	

Pos	Part Number	Name	Remarks	Qty	Model
6	477 819 395	hose 800 MM		2	
7	477 819 717	connecting piece	/L	1	
8	477 820 409	connecting piece	/R	1	
9	477 819 291	side vent	/L	1	
	01C	black			
	89S	brown			
10	477 819 292	side vent	/R	1	
	01C	black			
	89S	brown			
11	477 819 705	air duct	/L	1	
12	E 477 819 706	air duct	/R	1	
13	477 819 212	clip		2	
14	477 819 175	cover bleeding		2	
15	477 819 179	cover bleeding	/L	1	
(15)	477 819 180	cover bleeding	/R	1	
		- -- E N D -- -			

Pos	Part Number	Name	Remarks	Qty	Model

Model	Year	MG	SG	Illustration	Restrictions	Update	12:54	06.04.2005	PORSCHE PET PORSCHE
924	85	8	13	813-10		187			

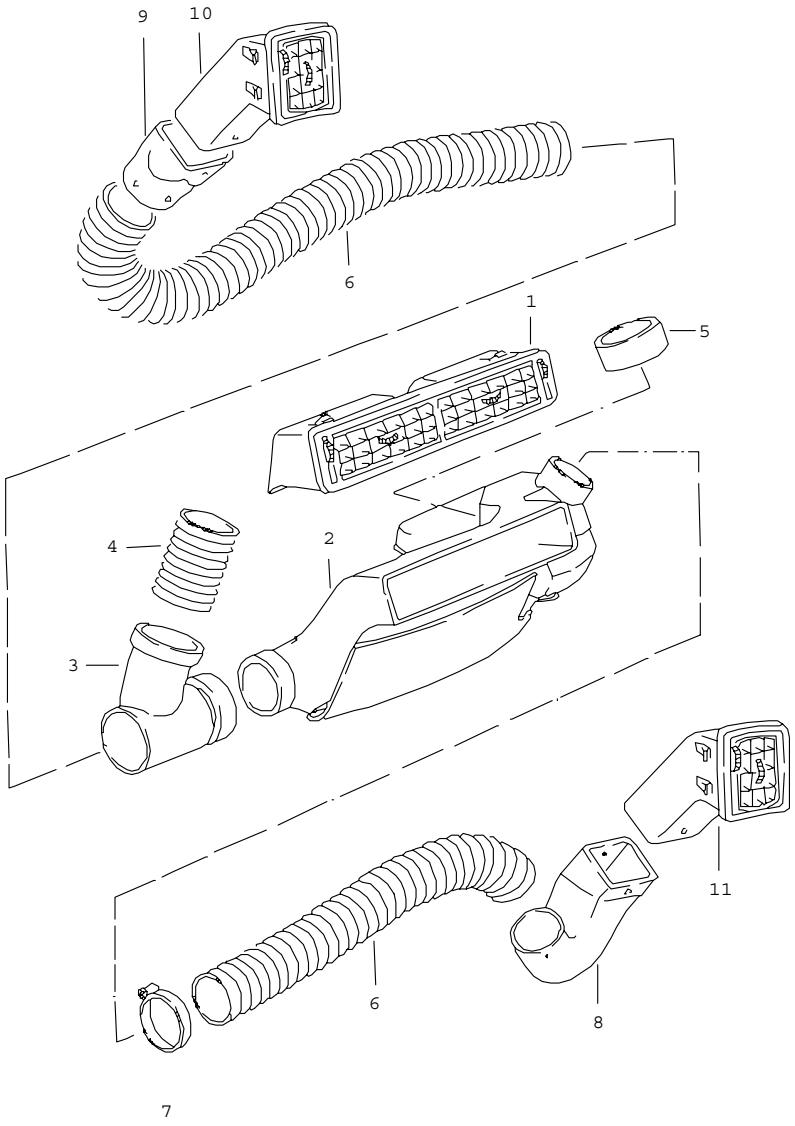

Pos	Part Number	Name	Remarks	Qty	Model
		air vent air hose left-hand drive			+M573
		F >>92CN4 02197 F >>93CN1 00305 F >>93BN7 00450			924 TURBO GT
1	477 819 173	centre nozzle		1	
	01C	black			
	89S	cadbury brown F >>92A04 14338 F >>93A01 40995			924 TURBO
(1)	477 819 151 A	centre nozzle		1	
	01C	black			
	89S	cadbury brown F 92A04 14339>>92BN4 09218 F 93A01 40996>>93BN1 01667			924 TURBO
(1)	477 819 173 A	centre nozzle		1	
	01C	black			
	89S	brown F 92BN4 09219>> F 93BN1 01668>>			924 TURBO
2	477 820 413	mixing chamber		1	
3	477 820 539	intermediate piece		1	
4	477 820 221	air hose 65 $		1	
5	477 820 427	air duct		1	
6	477 819 395	hose 50 $		2	
7	999 512 348 02	hose clamp		1	
-	999 513 003 40	tie-wrap		1	
8	477 820 409	connecting piece	/R	1	
9	477 819 717	connecting piece	/L	1	
10	477 819 291	side vent	/L	1	
	01C	black			
	89S	brown			

Model	Year	MG	SG	Illustration	Restrictions	Update			
924	85	8	13	813-10		187	12:54	06.04.2005	PORSCHE PET PORSCHE

Pos	Part Number	Name	Remarks	Qty	Model	Pos	Part Number	Name	Remarks	Qty	Model
11	477 819 292	side vent	/R	1							
	01C	black									
	89S	brown									
		- -- E N D -- -									

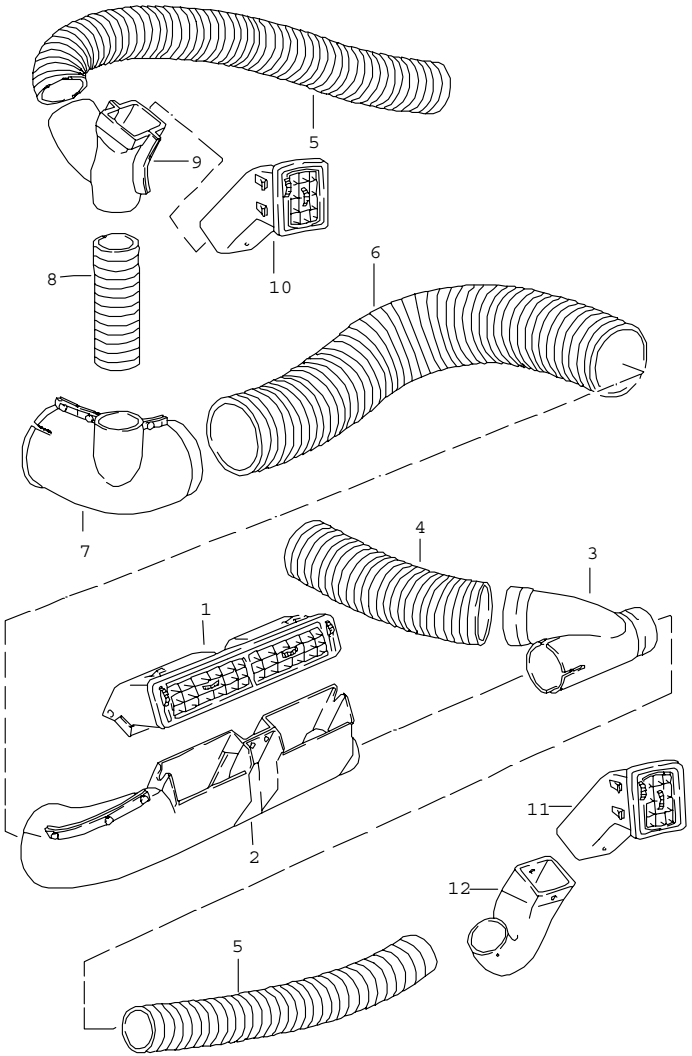

Pos	Part Number	Name	Remarks	Qty	Model
		air vent air hose right-hand drive			+M573
		F >>92CN4 02197 F >>93CN1 00305 F >>93BN7 00450			924 TURBO
1	478 820 219	centre nozzle F >>92BN4 09218 F >>93BN1 01667		1	924 TURBO
	01C	black			
	89S	brown			
(1)	477 819 173 A	centre nozzle F 92BN4 09219>> F 92BN1 01668>>		1	924 TURBO
	01C	black			
	89S	brown			
2	E 478 820 217	air duct		1	
(2)	478 820 217 A	air duct		1	
3	478 820 215	connecting piece		1	
4	478 820 235	air hose 65 $		1	
5	477 819 395	hose 50 $		2	
6	478 820 231	hose 80 $		1	
7	478 820 211	branch piece		1	
8	478 820 233	air hose 45 $		1	
9	478 820 213	connecting piece		1	
10	477 819 291	side vent	/L	1	
	01C	black			
	89S	brown			
11	477 819 292	side vent	/R	1	
	01C	black			
	89S	brown			

Pos	Part Number	Name	Remarks	Qty	Model	Pos	Part Number	Name	Remarks	Qty	Model
12	477 820 409	connecting piece	/R	1							
		- -- E N D -- -									

Model	Year	MG	SG	Illustration	Restrictions	Update	12:55	06.04.2005	PORSCHE	PET	PORSCHE
924	85	8	13	813-20		187					

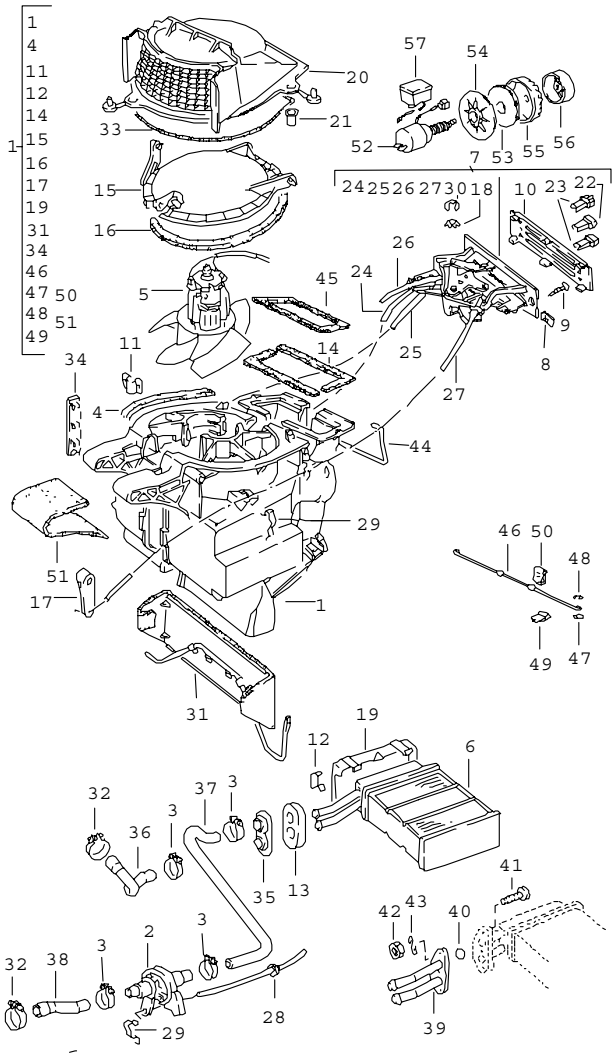

Pos	Part Number	Name	Remarks	Qty	Model
		heating left-hand drive			+M 573
		F >>92CN4 02197 F >>93CN1 00305 F >>93BN7 00450			924 TURBO GT
1	477 820 014	flap control box		1	
2	477 819 017	heater valve		1	
3	999 512 346 00	hose clamp LC 16-25		4	
4	321 819 019	gasket		2	
5	321 819 021	blower motor		1	
6	477 819 030	heat exchanger		1	
7	477 819 021 A	control switch		1	
8	477 819 789	speed nut 16 X 12,2		2	
9	E N 014 100 1	tapping screw B 4,8 X 25		2	
10	E 477 819 043 C	cover		1	
11	321 819 053	clamp		2	
12	321 819 059	clamp		7	
13	477 819 065	damping piece		1	
14	321 819 089	gasket air duct		2	
15	321 819 107	flap		1	
16	321 819 109	gasket flap		1	
17	321 819 123	lever flap		1	
18	477 819 139	cup spring		2	
19	477 819 347	cover heat exchanger		1	
20	477 819 245	cover flap		1	
21	477 819 253	grommet		3	

Pos	Part Number	Name	Remarks	Qty	Model
22	477 819 319	knob centre		1	
23	477 819 319 A	knob		2	
24	477 819 279	traction F >>92BN4 02099 F >>93BN1 00344 F >>93BN7 00106		1	
24	477 819 279 A	traction F 92BN4 02100>> F 93BN1 00345>> F 93BN7 00107>>		1	
25	477 820 275	traction flap		1	
26	477 819 341	traction valve		1	
27	477 819 325	traction flap F >>92BN4 02574 F >>93BN1 00399 F >>93BN7 00138		1	
27	477 819 325	traction flap F 92BN4 02575>> F 93BN1 00400>> F 93BN7 00139>>		1	
28	477 819 849	grommet		1	
28A	477 819 340	hose		1	
29	477 819 343	spring clamp		1	
30	900 116 003 02	circlip 4		2	
31	E 321 819 361	flap		1	
32	999 512 272 02	hose clamp LA 25 X 40		2	
-	E AMV 152 109 03	sealing cord 9 MM $ roller 4,5 METER 740 MM		X 1	
34	321 819 645	clip		1	
35	823 819 699 A	drain bush		1	
36	477 819 723	hose		1	
37	477 819 725	hose		1	
-	N 020 269 1	hose		*	924
38	-	85 MM		1	924
(38)	931 106 271 01	water hose		1	TURBO
39	477 819 869	connecting flange for heat exchanger		1	
40	021 101 173	sealing ring heat exchanger		2	
41	N 010 296 2	hexagon-head bolt M 5 X 18		3	
42	N 011 005 14	hexagon nut M 5		3	
43	N 012 222 4	spring washer A 5		3	
44	477 857 809	clamp	-81	1	
(44)	477 857 809	clamp	82-	1	
45	477 857 887 A	gasket		1	
46	477 819 281	connecting rod		1	
47	N 012 222 4	spring washer		2	
48	900 116 003 02	circlip		2	
49	477 819 343	spring clamp		1	
50	477 819 285	clip		1	
51	477 819 345	sealing strip		1	
52	477 959 530	air-conditioning switch		1	
53	477 959 526	spacer		1	
54	477 959 527	fastening washer		1	
55	477 959 528	adjusting wheel		1	
56	477 959 529	knob		1	
57	477 959 531	booster		1	
-	477 820 523	water drain hose		1	
		- -- E N D -- -			

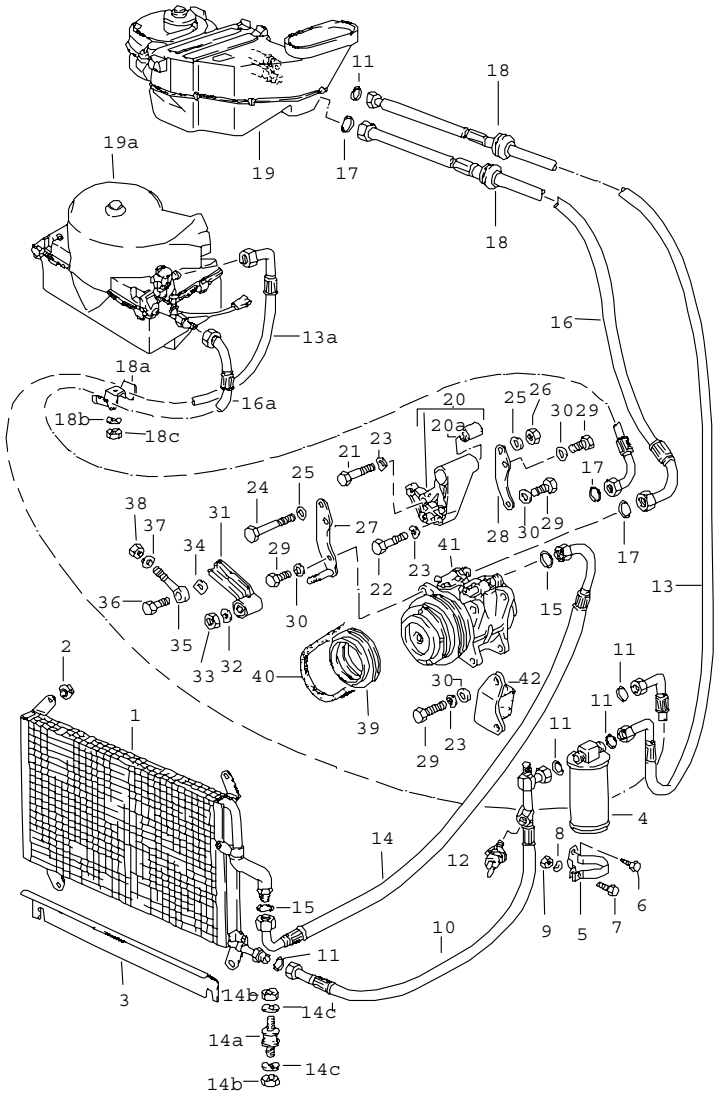

Pos	Part Number	Name	Remarks	Qty	Model
		air conditioner			+M 573
1	477 820 751 B	condenser		1	
2	477 820 773	grommet		4	
3	477 853 717 A	cooling air duct		1	
(4)	944 573 943 00	desiccator		1	
5	477 820 195	support fluid tank F >>92CN4 00802 F >>93CN1 00087 F >>93BN7 00450		1	 924 TURBO GT
(5)	944 573 081 00	support fluid tank F 92CN4 00803>> F 93CN1 00088>>		1	 924 TURBO
6	N 013 884 5	tapping screw B 4,8 X 13		2	
7	N 010 264 4	hexagon-head bolt M 5 X 20		1	
8	N 012 005 3	lock ring 5		1	
9	N 011 005 14	hexagon nut M 5 F >>92CN4 00802 F >>93CN1 00087 F >>93BN7 00450		1	 924 TURBO GT
10	477 820 423	refrigerant line		1	924
10	477 820 423	refrigerant line	/RL	1	TURBO
(10)	477 820 423 A	refrigerant line	/LL	1	TURBO
11	477 820 489	o-ring		4	
12	959 613 137 00	low pressure switch		1	
13	477 820 424	refrigerant line evaporator	/LL	1	
13A	478 820 735	refrigerant line	/RL	1	
-	999 513 003 40	tie-wrap		1	
14	477 820 422 B	refrigerant line		1	
14A	810 906 219 A	bonded rubber mounting		1	

Pos	Part Number	Name	Remarks	Qty	Model
14B	900 076 010 02	hexagon nut M 6		2	
14C	N 012 007 2	lock ring A 6		2	
15	999 707 250 40	o-ring		2	
16	477 820 425	refrigerant line	/LL	1	924
(16)	477 820 425 A	refrigerant line	/LL	1	TURBO
16A	478 820 723 A	refrigerant line	/RL	1	
17	478 820 731	o-ring		2	
18	901 573 143 00	rubber sleeve		2	
18A	477 820 757	clip	/RL	2	
18B	N 012 006 4	lock ring B 6	/RL	2	
18C	900 076 010 02	hexagon nut M 6	/RL	2	
19	E 477 820 002	air conditioner F >>92CN4 02197 F >>93CN1 00305 F >>93BN7 00450	/LL	1	924 TURBO GT
19	477 820 002 A	air conditioner F 92CN4 02198>> F 93CN1 00306>> see group 8/13/30	/LL	1	924 TURBO
19A	E 478 820 017 A	evaporator see group 8/13/35	/RL	1	
20	047 260 877 E	bracket		1	924
(20)	931 101 014 00	bracket		1	TURBO
20A	047 260 905 C	rubber mounting		2	
21	E 900 074 065 02	hexagon-head bolt M 10 X 70		1	
22	900 074 063 02	hexagon-head bolt M 10 X 55		2	
23	N 012 230 6	spring washer B 10		5	
24	N 010 494 4	hexagon-head bolt M 10 X 125		1	
25	900 025 008 09	washer A 10,5		2	
26	N 011 010 6	hexagon nut M 10		1	
27	047 260 883 B	support compressor	/V	1	
28	047 260 859 C	support	/H	1	
29	N 040 125 1	hexagon-head bolt M 10 X 30		6	
30	900 025 008 09	washer A 10,5		6	
31	047 260 903 B	clamp		1	
32	N 012 230 6	spring washer B 10		1	
33	N 011 010 6	hexagon nut M 10		1	
34	047 260 947 A	washer		1	
35	E N 900 798 01	eye screw		1	
36	900 075 043 02	hexagon-head bolt M 10 X 30		1	
37	N 011 525 13	washer		1	
38	311 101 463	hexagon nut M 8		1	
39	046 105 255 F	v-belt pulley		1	924
(39)	477 105 255	v-belt pulley		1	TURBO
40	047 260 849 A	v-belt		1	
41	047 260 803	compressor see group 8/13/40		1	
42	047 260 823 B	vibration damper		1	

- -- E N D -- -

Model	Year	MG	SG	Illustration	Restrictions	Update	12:55	06.04.2005	PORSCHE	PET	PORSCHE
924	85	8	13	813-30		187					

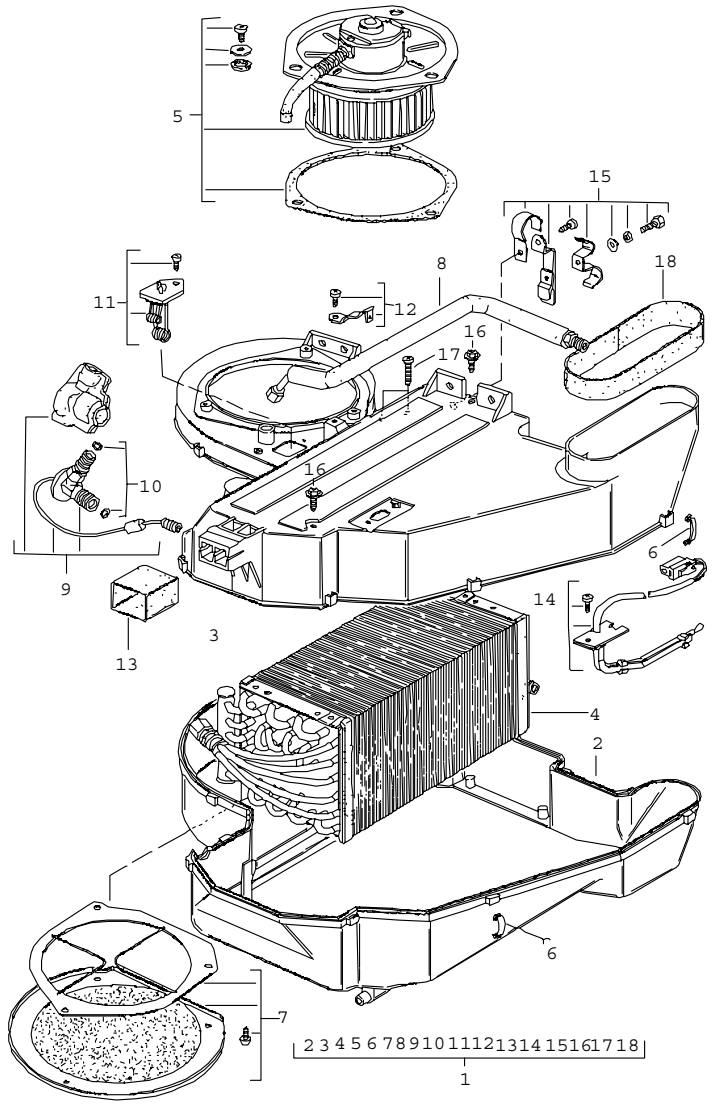

Pos	Part Number	Name	Remarks	Qty	Model
		air conditioner left-hand drive			+M 573
		F >>92CN4 02197 F >>93CN1 00305 F >>93BN7 00458			924 TURBO GT
1	E 477 820 002	air conditioner		1	
2	477 820 483	suction housing		1	
3	477 820 913	housing upper part		1	
4	477 820 903	evaporator		1	
5	477 820 905	blower		1	
6	477 820 449	clamp		25	
7	477 820 907	air cleaner		1	
8	477 820 459	pressure line		1	
9	477 820 909	expansion valve		1	
10	477 820 911	set of o-rings for expansion valve		1	
11	477 820 915	resistor		1	
12	E 477 820 917	retaining bow		1	
13	477 820 447 A	rubber boot		1	
14	477 820 901	temperature sensor		1	
15	E 477 820 919	clamp		1	
16	E 477 820 437	tapping screw		2	
17	E 477 820 435 A	tapping screw		2	
18	477 820 507 A	insulator		1	
-	477 820 523	water drain hose		1	
		- -- E N D -- -			

Model	Year	MG	SG	Illustration	Restrictions	Update	12:56	06.04.2005	PORSCHE PET PORSCHE
924	85	8	13	813-35		187			

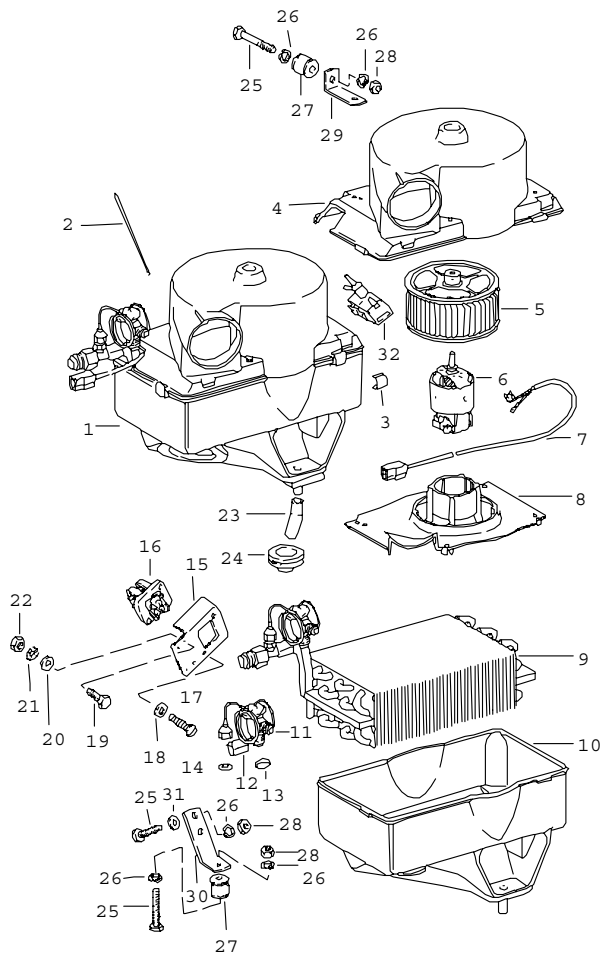

Pos	Part Number	Name	Remarks	Qty	Model
		air conditioner right-hand drive			+M 573
1	E 478 820 017 A	evaporator with housing		1	
2	901 573 903 00	guide tube temperature switch		1	
3	901 573 904 00	tensioning spring		4	
4	911 573 023 00	housing cover		1	
5	901 573 906 00	fan		1	
6	901 624 901 00	electric motor		1	
7	E 901 612 084 00	wiring harness		1	
8	911 573 323 00	engine support		1	
9	901 573 907 00	evaporator		1	
10	478 898 117	housing lower part		1	
11	901 573 915 00	expansion valve		1	
12	901 573 914 00	clip		1	
13	901 573 147 00	gasket 3/4"		1	
14	901 573 916 00	gasket 7/16"		1	
15	478 820 209	bracket		1	
16	911 618 151 00	thermo bi-metal switch		1	
17	900 146 011 02	oval-head screw AM 4 X 10		2	
18	N 012 224 3	spring washer A 4		2	
19	N 010 207 6	hexagon-head bolt M 5 X 12		2	
20	900 025 003 02	washer A 5,3		2	
21	N 012 130 2	shake-proof washer A 5,3		2	
22	N 011 005 14	hexagon nut M 5		2	

Pos	Part Number	Name	Remarks	Qty	Model
23	N 020 363 1	hose 70 MM		1	
-	N 020 363 1	hose 15 X 2,5		*	
23	-	70 MM		1	
24	901 573 143 00	rubber sleeve		3	
25	N 010 210 13	hexagon-head bolt M 6 X 10		4	
26	N 012 006 4	lock ring B 6		6	
27	999 703 302 00	silentbloc		2	
28	900 076 010 02	hexagon nut M 6		4	
29	478 820 201	angle	/R	1	
30	478 820 207	angle lower		1	
31	N 011 524 7	washer A 6,4		2	
32	928 573 691 02	solenoid valve F 92CN4 02198>> F 93CN1 00306>>		1	
		- -- E N D -- -			

Pos	Part Number	Name	Remarks	Qty	Model

Model	Year	MG	SG	Illustration	Restrictions	Update	12:56	06.04.2005	PORSCHE PET PORSCHE
924	85	8	13	813-40		187			

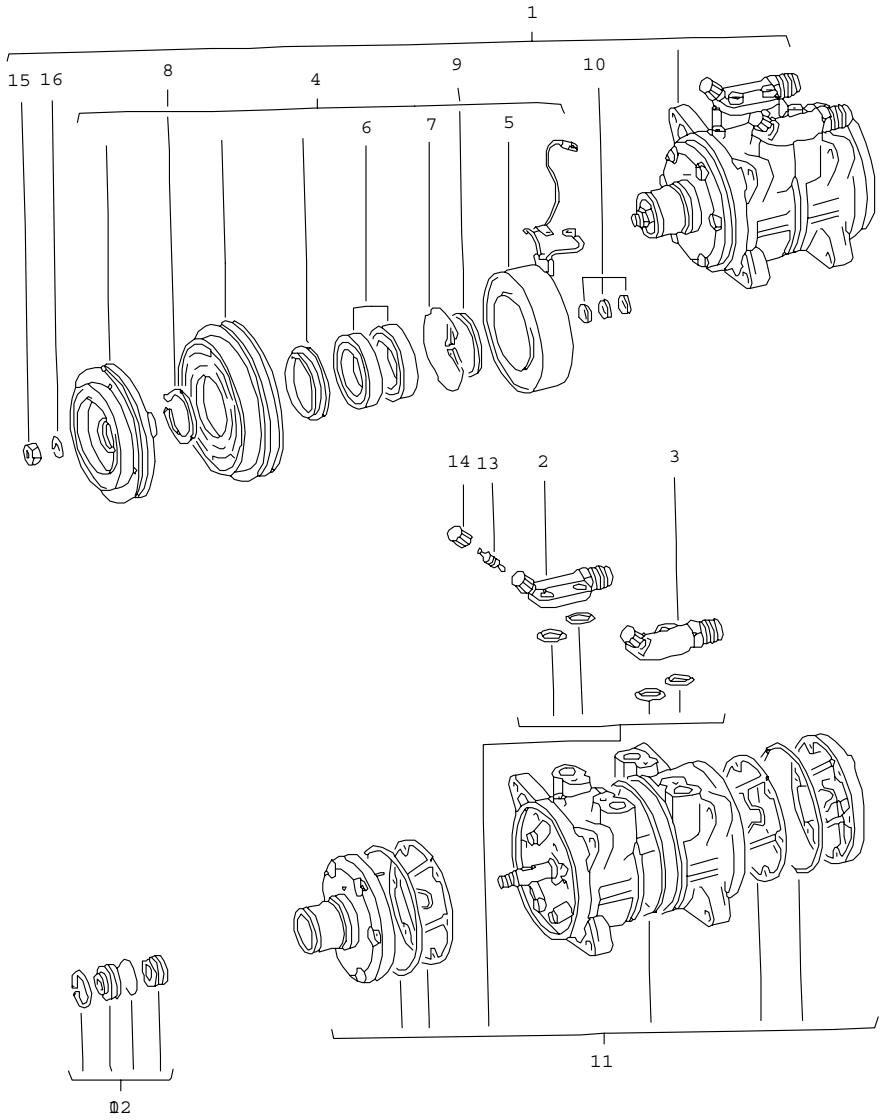

Pos	Part Number	Name	Remarks	Qty	Model
		compressor			+M 573
1	047 260 803	compressor		1	
2	477 298 839	pressure valve		1	
3	477 298 837	suction valve		1	
4	477 298 823	clutch		1	
5	477 298 825	solenoid coil		1	
6	477 298 831	set of bearings		1	
7	477 298 827	retaining spring		1	
8	477 298 841	circlip		1	
9	E 477 298 843	circlip		1	
10	477 298 829	spacer 0,1 MM		X	
(10)	477 298 829 A	spacer 0,2 MM		X	
(10)	477 298 829 B	spacer 0,5 MM		X	
(10)	477 298 829 C	spacer 0,8 MM		X	
(10)	477 298 829 B	spacer 1,0 MM		X	
11	E 477 298 833	set of seals		1	
12	477 298 835	set of seals		1	
13	928 573 908 03	valve insert		2	
14	928 573 909 02	cap		2	
15	N 011 008 8	hexagon nut M 8		1	
16	900 027 015 02	lock ring B 8		1	
		- -- E N D -- -			

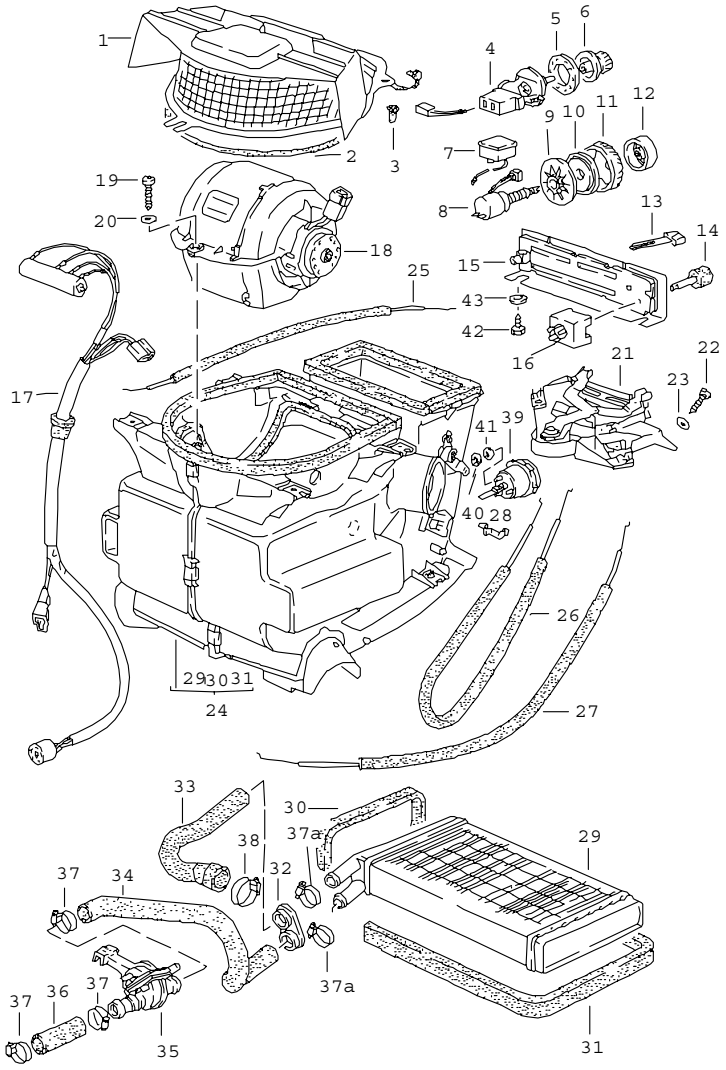

Pos	Part Number	Name	Remarks	Qty	Model
		heater heat exchanger			
		F 92CN4 02198>> F 93CN1 00306>>			924 TURBO
1	944 572 145 00	cover		1	924
1	944 572 145 00	cover	/LL	1	TURBO
(1)	945 572 145 00	cover	/RL	1	TURBO
-	E AMV 152 109 03	sealing cord 9 MM $ roller 4,5 METER 740 MM		X 1	
3	477 819 253	grommet		3	
4	478 959 519	switch	/RL	1	M 573
5	477 959 517	rose	/RL	1	M 573
6	477 959 513	knob	/RL	1	M 573
7	477 959 531	booster		1	M 573
8	477 959 530	air-conditioning switch		1	M 573
9	477 959 527	fastening washer		1	M 573
10	477 959 526	spacer		1	M 573
11	477 959 528	adjusting wheel		1	M 573
12	477 959 529	knob		1	M 573
13	944 572 350 00	knob		3	
14	944 572 349 00	knob		1	
15	477 857 115	cover		1	
16	321 959 511 A	blower switch		1	
17	477 971 281	resistor		1	
18	321 820 015 B	blower		1	
19	900 143 046 02	tapping screw B 4,8 X 16		1	
20	N 011 692 3	washer B 5,1		1	
21	321 819 045 C	control switch		1	

Pos	Part Number	Name	Remarks	Qty	Model
22	900 143 007 02	tapping screw B 4,2 X 13		2	
23	900 025 002 02	washer A 4,3		2	
24	944 572 023 00	flap control box		1	
(24)	944 573 023 00	flap control box		1	M 573
25	944 572 649 00	bowden cable		1	
26	944 572 648 00	bowden cable		1	
27	944 572 647 00	bowden cable		1	
-	477 819 343	spring clamp		X	
29	171 819 031 D	heat exchanger		1	
30	321 819 069 B	rubber seal		1	
31	A 191 819 069	gasket		1	
31	191 819 069	gasket		1	
32	823 819 699 A	drain bush		1	
33	477 819 723 A	hose		1	
34	E 477 819 725 A	hose		1	
35	E 477 819 081	valve		1	
-	N 020 269 1	hose 16X3,5		*	
36	-	65 MM		1	
37	999 512 346 00	hose clamp LC 16-25		X	
37A	999 512 346 00	hose clamp SGT 16-25		2	
38	999 512 272 02	hose clamp LA 25-40		X	
39	944 573 053 00	vacuum unit			M 573
40	999 507 243 02	kronen-fix		3	M 573
41	928 574 465 02	rubber washer		3	M 573
42	900 187 114 07	tapping screw B 2,9 X 13		2	
43	N 011 662 1	washer 3,2		2	

- -- E N D -- -

Model	Year	MG	SG	Illustration	Restrictions	Update	12:57	06.04.2005	PORSCHE	PET	PORSCHE
924	85	8	13	813-50		187					

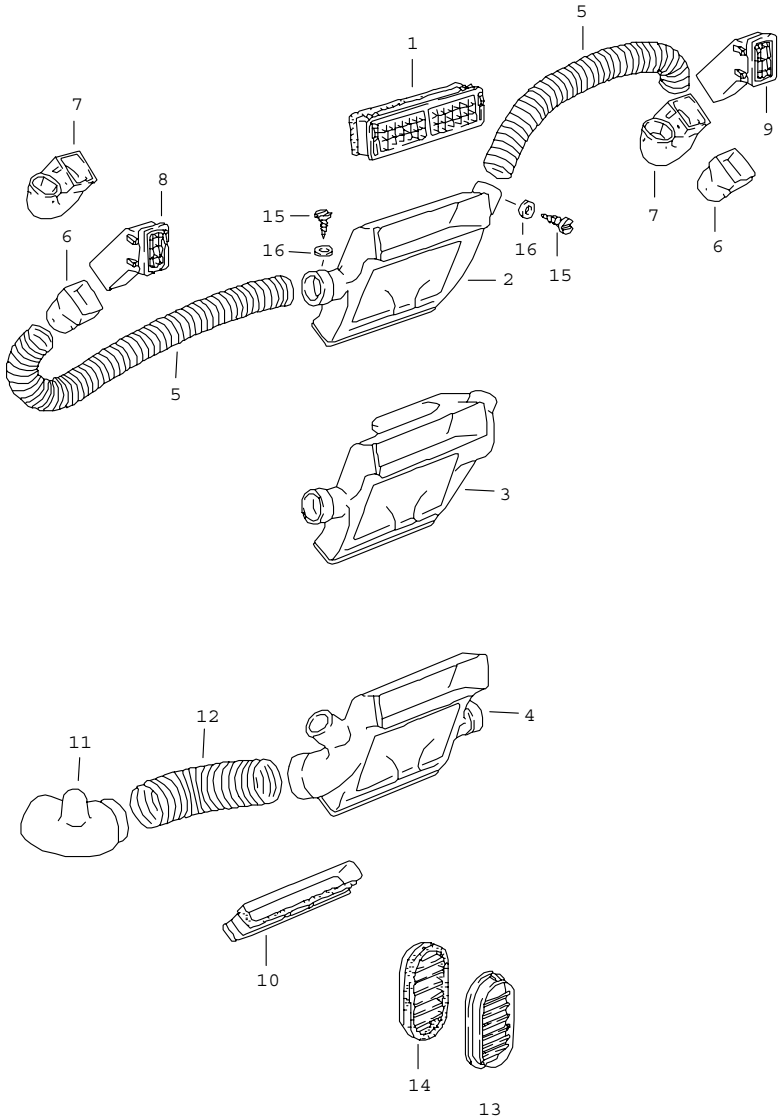

Pos	Part Number	Name	Remarks	Qty	Model
		cover air vent air hose			
		F 92CN4 02198>> F 93CN1 00306>>			924 TURBO
1	477 819 173 A	centre nozzle		1	
	01C	black	-82		
	89S	brown	-82		
	1DB	black	83-		
	4RB	brown	83-		
2	944 572 067 00	mixing chamber	/LL	1	
3	E 944 573 067 00	mixing chamber	/LL	1	M 573
4	945 572 067 00	mixing chamber	/RL	1	
(4)	945 573 067 00	mixing chamber	/RL	1	M 573
5	477 819 395	hose		2	
6	477 819 717	connecting piece	/LL/L	1	
6	477 819 717	connecting piece	/RL/R	1	
7	477 820 409	connecting piece	/LL/R	1	
7	477 820 409	connecting piece	/RL/L	1	
8	477 819 291	side vent	/L	1	
	01C	black	-82		
	89S	brown	-82		
	1DB	black	83-		
	4RB	brown	83-		
9	477 819 292	side vent	/R	1	
	01C	black	-82		
	89S	brown	-82		
	1DB	black	83-		
	4RB	brown	83-		
10	E 944 572 065 00	adapter		1	
11	478 820 211 A	intermediate piece	/RL	1	M 573

Pos	Part Number	Name	Remarks	Qty	Model	Pos	Part Number	Name	Remarks	Qty	Model
12	478 820 231	hose	/RL	1	M 573						
13	477 819 175	cover for lock pillar		2							
14	477 819 179 A	cover for door	/L	1							
(14)	477 819 180	cover for door	/R	1							
15	900 143 031 02	oval-head sheetmetal screw B 4,2 X 9,5		4							
16	900 151 028 02	washer B 4,3 X 12		4							
		- -- E N D -- -									

Model	Year	MG	SG	Illustration	Restrictions	Update	12:57	06.04.2005	PORSCHE PET PORSCHE
924	85	8	13	813-55		187			

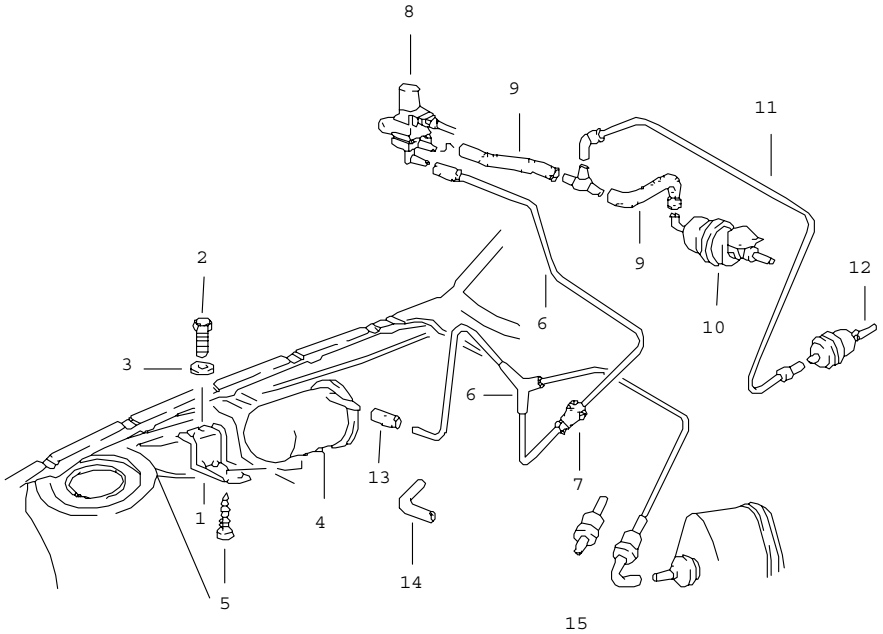

Pos	Part Number	Name	Remarks	Qty	Model
		vacuum line			
		F 92CN4 02198>> F 93CN1 00306>>			924 TURBO
1	944 573 465 00	support	/LL -83	1	924
(1)	945 573 465 00	support	/RL -83	1	
(1)	944 573 465 01	support	84-	1	
2	N 010 215 13	hexagon-head bolt M 6 X 15	-83	2	
3	N 011 524 7	washer A 6,4	-83	2	
-	900 076 010 02	hexagon nut M 6	84-	2	
-	N 012 006 4	lock ring B 6	84-	2	
4	945 573 808 00	vacuum reservoir		1	
5	N 090 186 1	tapping screw B 4,8 X 13		1	
6	944 573 099 00	vacuum line	/LL	1	TURBO
6	944 573 099 00	vacuum line F >>92CN4 06700	/LL	1	924
6	944 573 099 02	vacuum line F 92CN4 06701>>	/LL	1	924
(6)	945 573 099 00	vacuum line F >>92CN4 06700 F >>93CN1 00883	/RL	1	924 TURBO
(6)	945 573 099 01	vacuum line F 92CN4 06701>> F 93CN1 00884>>	/RL -83	1	924 TURBO
(6)	945 573 099 02	vacuum line	/RL 84-	1	
7	477 819 849	grommet		1	
8	944 573 165 00	solenoid valve	/LL	1	
(8)	928 573 691 02	solenoid valve	/RL	1	
9	477 820 557	vacuum line	/LL	1	
10	477 820 545	vacuum unit	/LL	1	
11	944 573 101 00	vacuum line	/LL	1	

Model	Year	MG	SG	Illustration	Restrictions	Update			
924	85	8	13	813-55		187	12:57	06.04.2005	PORSCHE PET PORSCHE

Pos	Part Number	Name	Remarks	Qty	Model	Pos	Part Number	Name	Remarks	Qty	Model
12	944 573 053 00	vacuum unit		1							
13	928 574 747 03	connecting piece	-83	1							
14	928 574 717 02	hose	84-	1							
15	928 537 361 02	valve		1							
		- -- E N D -- -									

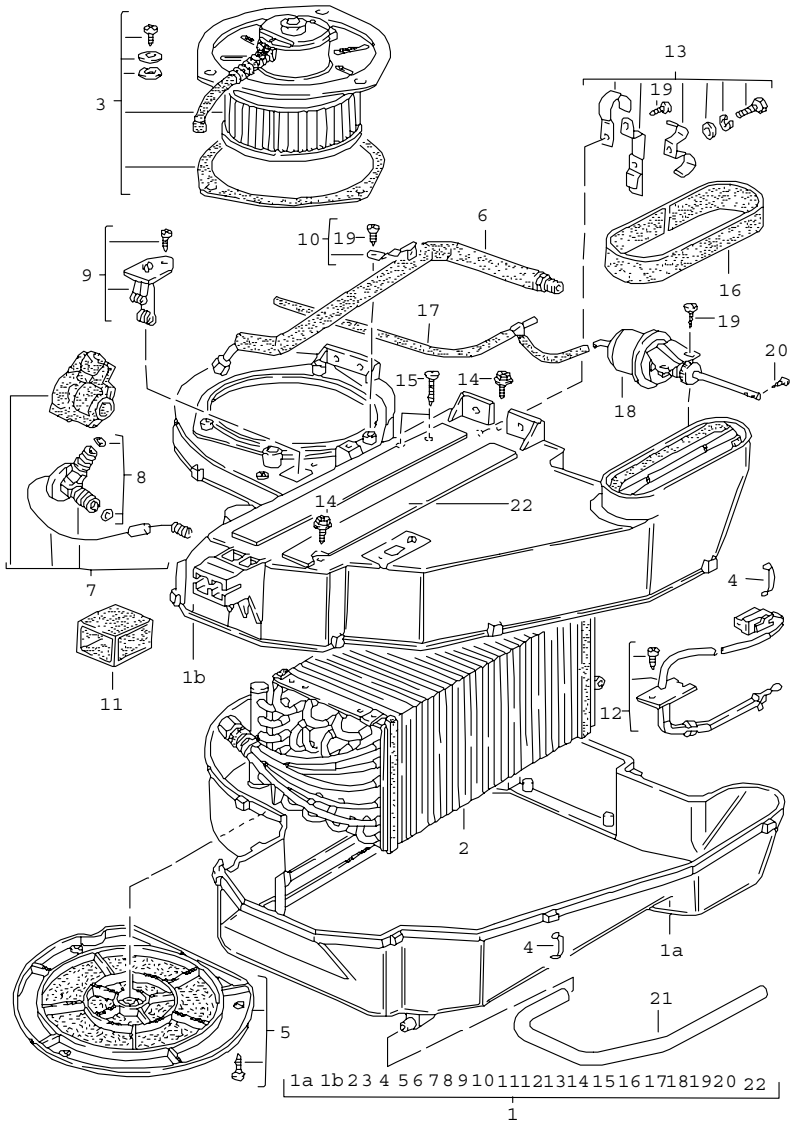

Pos	Part Number	Name	Remarks	Qty	Model
		air conditioner left-hand drive			+M573
		F 92CN4 02198>> F 93CN1 00306>>			924 TURBO
1	477 820 002 A	air conditioner		1	
1A	477 820 421 A	housing lower part		1	
1B	477 820 420 A	housing upper part		1	
2	477 820 903	evaporator		1	
3	477 820 905	blower		1	
4	477 820 449	clamp		11	
5	477 820 907	air cleaner		1	
6	477 820 459	pressure line		1	
7	477 820 909	expansion valve		1	
8	477 820 911	set of o-rings		1	
9	477 820 915	resistor		1	
10	E 477 820 917	retaining bow		1	
11	477 820 447 A	rubber boot		1	
12	477 820 901	temperature sensor		1	
13	E 477 820 919	clamp		1	
14	E 477 820 437	tapping screw		2	
15	E 477 820 435 A	tapping screw		2	
16	477 820 507 A	insulator		1	
17	477 820 557	vacuum line		1	
18	477 820 545	vacuum unit		1	
19	E 477 820 435 D	tapping screw		2	
20	E 477 820 555	pan-head screw		2	
21	477 820 523	water drain hose		1	
22	477 820 447	gasket		2	
		- -- E N D -- -			

Model	Year	MG	SG	Illustration	Restrictions	Update		
924	85	8	98	REP		187	9:48	12.04.2005

Pos	Part Number	Name	Remarks	Qty	Model
		repair kits			
>>	> 477 800 377 B	set of locks 1 set for door handle steering lock rear lid lock fuel tank cap comprising:		1	
		rear lid lock		1	
		lock cylinder for door handle		2	
		lock cylinder for steering lock		1	
		lock cylinder for fuel tank cap		1	
		key S 91, PROFIL VB		2	
		use also:			
-	944 201 061 01	fuel tank cap		1	
>>	> 477 898 011 A	sealing set for windscreen		1	
>>	> 477 898 025	installation set door mirror electrically adjustable heatable plan not for comprising:	/LL/L	1	(J)
-	911 731 043 00	mirror housing		1	
-	928 731 141 06	mirror base		1	
-	999 143 003 02	hexagon-head bolt M 5 X 10		3	
-	911 731 027 02	frame with transmission		1	
-	911 731 035 08	mirror glass plan		1	
-	999 703 128 40	grommet for mirror glass		3	
-	477 831 139 C	reinforcement		1	
-	928 531 235 03	threaded piece		1	

Model	Year	MG	SG	Illustration	Restrictions	Update		
924	85	8	98	REP		187	9:48	12.04.2005

Pos	Part Number	Name	Remarks	Qty	Model
-	N 013 295 1	tensioning sleeve		1	
-	944 731 505 00	desk pad		1	
-	911 731 257 02	guide tube		1	
-	911 731 345 02	adjusting washer lower		1	
-	911 731 347 00	adjusting washer upper		1	
-	911 731 029 01	compression spring		1	
-	900 186 042 02	pan-head screw M 5 X 40		1	
-	E 477 867 181	mounting piece		1	
-	N 014 090 5	tapping screw 3,9 X 13		2	
-	999 507 071 00	speed nut		2	
-	911 613 115 00	switch		1	
-	928 555 463 02	threaded bush		1	
-	928 613 462 00	knob		1	
-	477 971 111	harness door mirror driver's door		1	
-	477 971 115 A	harness door mirror dashboard		1	
-	477 971 910	bellows		1	
-	803 971 979	plug socket		1	
>>	> 477 898 026	installation set door mirror electrically adjustable heatable plan comprising:	/LL/R	1	
-	911 731 044 00	mirror housing		1	
-	928 731 143 08	mirror base		1	
-	999 143 003 02	hexagon-head bolt M 5 X 10		3	
-	911 731 028 02	frame with transmission		1	

Model	Year	MG	SG	Illustration	Restrictions	Update		
924	85	8	98	REP		187	9:48	12.04.2005

Pos	Part Number	Name	Remarks	Qty	Model
-	911 731 035 08	mirror glass plan		1	
-	999 703 128 40	grommet for mirror glass		3	
-	477 831 140 C	reinforcement		1	
-	928 531 235 03	threaded piece		1	
-	N 013 295 1	tensioning sleeve		1	
-	944 731 508 00	desk pad		1	
-	911 731 257 02	guide tube		1	
-	911 731 345 02	adjusting washer lower		1	
-	911 731 347 00	adjusting washer upper		1	
-	911 731 029 01	compression spring		1	
-	900 186 042 02	pan-head screw M 5 X 40		1	
-	E 477 867 181	mounting piece		1	
-	N 014 090 5	tapping screw 3,9 X 13		2	
-	999 507 071 00	speed nut		2	
-	911 613 115 00	switch		1	
-	928 555 463 02	threaded bush		1	
-	928 613 462 00	knob		1	
-	477 971 113	harness door mirror passenger's door		1	
-	477 971 115	harness door mirror dashboard		1	
-	477 971 910	bellows		1	
-	477 955 703	rocker switch		1	
-	803 971 979	plug socket		1	

Model	Year	MG	SG	Illustration	Restrictions	Update		
924	85	8	98	REP		187	9:48	12.04.2005

Pos	Part Number	Name	Remarks	Qty	Model
>>	> 477 898 033	air conditioner 1 set for subsequent installat. F >>92CN4 02197 F >>93CN1 00305 F >>93BN7 00450 use also:	/LL	1	 924 TURBO GT
-	047 260 877 E	bracket		1	924
-	931 101 014 00	bracket		1	TURBO,GT
-	477 820 423	hose		1	924
-	477 820 423 A	hose		1	TURBO,GT
-	477 820 425	hose		1	924
-	477 820 425 A	hose		1	TURBO,GT
-	477 863 855 B	insulation firewall F >>92BN4 02267 F >>93BN1 00360		1	 924 TURBO
-	477 863 855 F	insulation firewall F 92BN4 02268>> F 93BN1 00361>> F 93BN7 00001>>		1	 924 TURBO GT
-	477 863 703 L	floor mat		1	924
	43S	black			
	83S	beige			
	87S	brown			
-	477 863 703 M	floor mat		1	TURBO,GT
	43S	black			
	83S	beige			
	87S	brown			
-	477 819 151 A	centre nozzle		1	
	01C	black			
	89S	brown			
-	477 820 412	knee protection trim		1	
	05T	black			
	21S	brown			

Model	Year	MG	SG	Illustration	Restrictions	Update		
924	85	8	98	REP		187	9:48	12.04.2005

Pos	Part Number	Name	Remarks	Qty	Model
-	E 937 501 241 01	air baffle		1	GT
>>	> 477 898 033 A	air conditioner 1 set for subsequent installat. F 92CN4 02198>> use also:	/LL	1	924
-	944 573 099 00	vacuum line F >>92CN4 06700		1	
-	944 573 099 02	vacuum line F 92CN4 06701>>		1	
-	477 820 412	knee protection trim		1	
	05T	black	-82		
	21S	brown	-82		
	1DB	black	83-		
	4RB	brown	83-		
		set without electric line when required order also:			
-	477 971 071 KC	wiring harness pour engine compartment		1	
-	477 971 196 CB	harness centre console		1	
-	944 615 113 01	relay		2	
-	141 951 253 B	relay		1	
-	477 971 561 B	harness		1	
-	171 959 141	relay		1	
>>	> 944 501 941 00	repair kit blind rivet comprising: blind rivet blind rivet blind rivet assembly sleeve		1 10 5 5 1	
>>	> 477 853 995	set of moldings moulding comprising:		1	
-	477 853 981	moulding 285 MM	/V/L	1	
-	477 853 982	moulding 285 MM	/V/R	1	

Model	Year	MG	SG	Illustration	Restrictions	Update		
924	85	8	98	REP		187	9:48	12.04.2005

Pos	Part Number	Name	Remarks	Qty	Model
-	477 853 983	moulding 395 MM	/V/L	1	
-	477 853 984	moulding 395 MM	/V/R	1	
-	477 853 985	moulding 1123 MM door	/L	1	
-	477 853 986	moulding 1123 MM door	/R	1	
-	477 853 987	moulding 285 MM	/H/L	1	
-	477 853 988	moulding 285 MM	/H/R	1	
-	477 853 989	moulding 440 MM	/H/L	1	
-	477 853 990	moulding 440 MM	/H/R	1	
		- -- E N D -- -			

Model	Year	MG	SG	Illustration	Restrictions	Update	12:57	06.04.2005	PORSCHE PET PORSCHE
924	85	9	01	901-00		187			

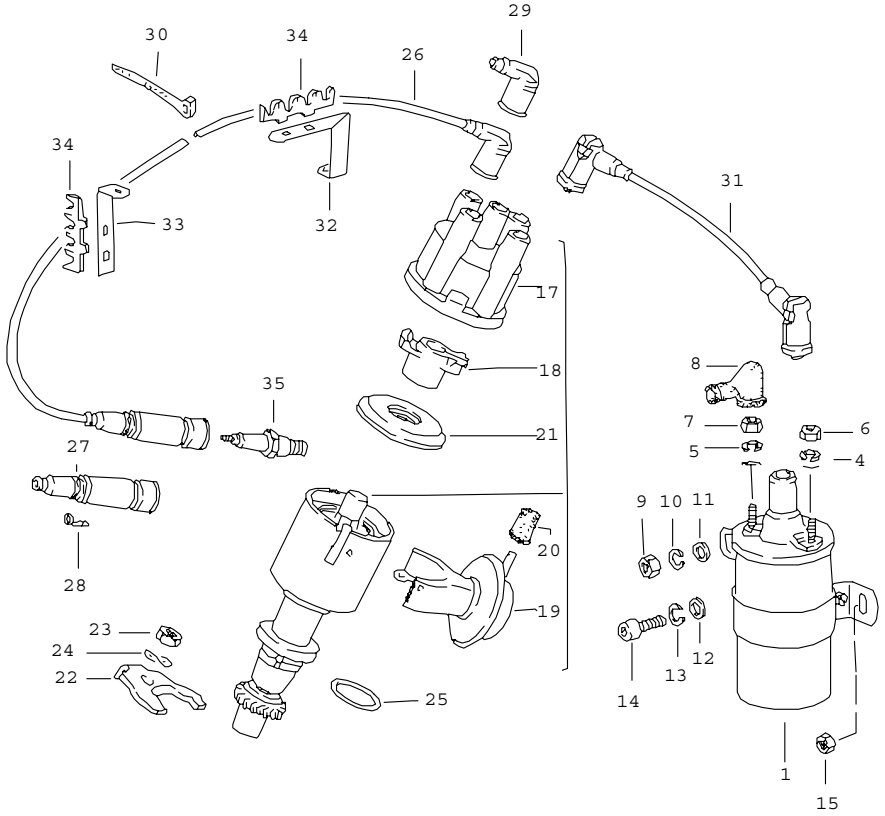

Pos	Part Number	Name	Remarks	Qty	Model
		engine electr. equipment 1			
1	046 905 105	ignition coil	-80	1	
1	046 905 105	ignition coil	81-	1	924
(1)	211 905 115 B	ignition coil	81-	1	TURBO,GT
2	900 025 003 02	washer A 5,3		1	
3	N 011 524 7	washer A 6,4		1	
4	N 012 005 3	lock ring B 5		1	
5	N 012 006 4	lock ring B 6		1	
6	N 011 005 14	hexagon nut M 5		1	
7	900 076 010 02	hexagon nut M 6		1	
8	311 971 901	protection cap		1	
9	900 076 010 02	hexagon nut M 6	-80	2	
10	N 012 006 4	lock ring B 6	-80	2	
11	900 151 006 09	washer B 6,4	-80	2	
12	N 011 525 13	washer A 8,4	81-	1	
13	900 027 015 02	lock ring B 8	81-	2	
14	N 010 239 11	hexagon-head bolt M 8 X 18	81-	1	
15	900 076 025 02	hexagon nut M 8	81-	1	
(16)	477 905 206 X	distributor		1	924
(16)	E 931 602 030 00	distributor	-80	1	TURBO
(16)	931 602 141 X	distributor	81-	1	TURBO,GT
17	E 113 905 207 C	distributor cap		1	
18	055 905 225 B	rotor		1	924

Pos	Part Number	Name	Remarks	Qty	Model
(18)	E 931 602 904 00	rotor	-80	1	TURBO
(18)	931 602 906 00	rotor	81-	1	TURBO,GT
19	477 905 243	vacuum unit		1	924
(19)	931 602 913 00	vacuum unit	-80	1	TURBO
20	930 110 292 00	plug		1	924(AUS)
21	039 905 241	dust cover		1	
22	E 056 905 251 D	support		1	
23	N 011 008 8	hexagon nut M 8		1	
24	N 012 241 11	spring washer B 8 X 15		1	
25	* 056 905 261	gasket		1	
26	477 905 441	ignition lead cylinder 1		1	924
26	477 905 442	ignition lead cylinder 2		1	924
26	477 905 443	ignition lead cyl. 3		1	924
26	477 905 444	ignition lead cyl. 4		1	924
26	931 609 105 01	ignition lead cylinder 1		1	TURBO
26	931 609 105 02	ignition lead cylinder 2		1	TURBO
26	931 609 105 03	ignition lead cyl. 3	-80	1	TURBO
26	931 609 105 06	ignition lead cyl. 3	81-	1	
26	931 609 105 04	ignition lead cyl. 4		1	TURBO
26	E 937 609 105 01	ignition lead cylinder 1		1	GT
26	937 609 105 02	ignition lead cylinder 2		1	GT
26	937 609 105 03	ignition lead cyl. 3		1	GT
26	937 609 105 04	ignition lead cyl. 4		1	GT
(27)	477 905 447	spark plug suppressor cap		4	
28	036 905 423	ignition cable socket		4	TURBO,GT
(28)	911 609 310 00	cable screw		4	924
29	036 035 281	suppressor cap		4	
30	N 020 902 1	tie-wrap 6,5 X 210		2	
31	N 038 889 1	ignition lead ignition coil distributor		1	
32	047 905 477	support ignition lead		1	924
(32)	931 609 313 00	support ignition lead	-80	1	TURBO
(32)	931 609 313 00	support ignition lead		1	TURBO,GT
33	046 905 477	support ignition lead		1	924
(33)	047 133 688	support ignition lead		1	TURBO,GT
34	E 052 905 471 B	cable holder ignition lead		2	
35	999 170 165 90	spark plug W 5 DC		4	924
(35)	999 170 140 90	spark plug W 4CS		4	GT,TURBO
(35)	999 170 128 90	spark plug W 3 DPO		4	TURBO

- -- E N D -- -

Model	Year	MG	SG	Illustration	Restrictions	Update	12:58	06.04.2005	PORSCHE PET PORSCHE
924	85	9	01	901-05		187			

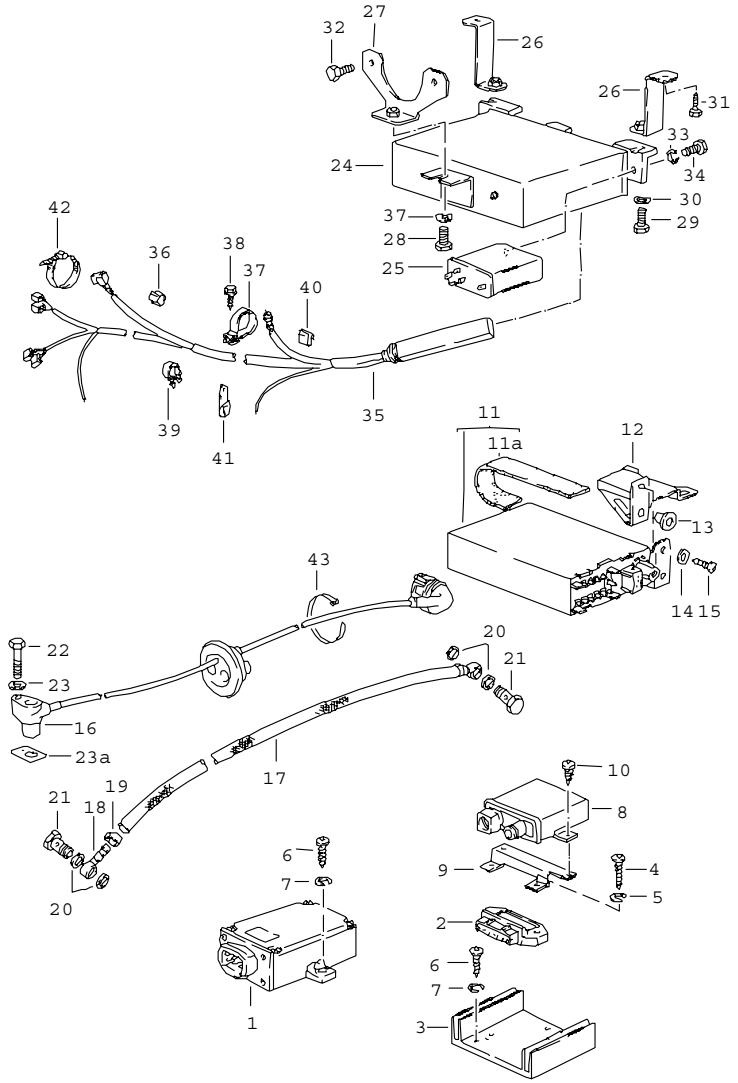

Pos	Part Number	Name	Remarks	Qty	Model
		electr. equipment-engine 2			
1	046 905 351	switch unit		1	924
(1)	477 905 351 B	switch unit	-80	1	TURBO
2	191 905 351 A	ignition switch unit	81-	1	TURBO,GT
3	211 905 357	heat dissipator	81-	1	TURBO,GT
4	N 014 125 1	oval-head screw M 4 X 18		2	
5	N 012 224 3	spring washer B 4		2	
6	900 143 046 02	tapping screw BZ 4,8 X 16		3	
7	N 012 225 2	spring washer B 5		3	
11	E 931 602 071 X	ignition control unit	81-	1	TURBO
(11)	931 602 071 01	ignition control unit	81-	1	TURBO (F),(GB),(B) (GR),(L),(I) (E),(P)
(11)	931 602 075 01	ignition control unit	81-	1	TURBO (S),(AUS) (HK),(NZ)
(11)	937 602 071 00	ignition control unit		1	GT
11A	931 602 171 00	plastic foam strip	81-	1	TURBO,GT
12	E 477 857 069 A	support	81-	1	TURBO,GT
13	999 507 040 40	expander nut		2	
14	N 012 222 4	spring washer A 5		2	
15	N 013 964 4	tapping screw B 4,2 X 16		2	
16	E 931 606 021 00	pulse sender	81-	1	TURBO,GT
-	999 181 715 40	vacuum hose 4 X 10		*	
17	-	700 MM	81-	1	TURBO,GT
18	999 230 113 02	nipple	81-	2	TURBO,GT
19	N 900 060 01	hose clamp 10,5	81-	2	TURBO,GT

Pos	Part Number	Name	Remarks	Qty	Model
20	N 013 830 7	sealing ring A 8 X 12	81-	4	TURBO,GT
21	N 021 055 2	banjo bolt	81-	2	TURBO,GT
22	900 075 017 02	hexagon-head bolt M 6 X 25		1	
23	N 011 524 7	washer A 6,4		1	
23A	931 606 213 00	shim		X	TURBO,GT
43	N 020 904 4	tie-wrap		1	
		- -- E N D -- -			

Pos	Part Number	Name	Remarks	Qty	Model

Model	Year	MG	SG	Illustration	Restrictions	Update	12:58	06.04.2005	PORSCHE PET PORSCHE
924	85	9	02	902-00		187			

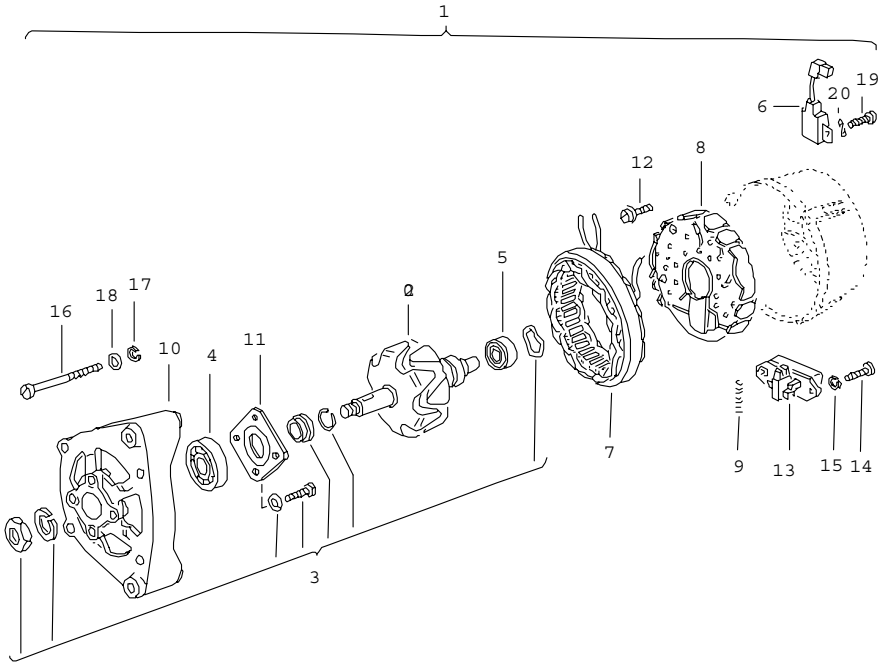

Pos	Part Number	Name	Remarks	Qty	Model
		generator			
(1)	E 068 903 017 D	generator 75 A		1	
2	E 063 903 213	claw-pole rotor		1	
3	028 903 320 B	parts kit		1	
4	E 021 903 221 B	deep-groove ball bearing		1	
5	E 021 903 221 C	deep-groove ball bearing		1	
6	063 903 291	condenser		1	
8	063 903 359	diode plate		1	
9	059 903 519	compression spring		2	
10	063 903 537	end plate		1	
11	E 021 903 543 A	retainer plate		1	
12	E 063 903 555	screw with spring washer		3	
13	070 903 803 A	regulator switch	-81	1	
(13)	928 603 142 00	regulator	82-	1	
14	N 014 125 1	oval-head screw AM 4 X 18		2	
15	N 012 004 2	lock ring B 4		2	
16	N 010 842 1	pan-head screw M 5 X 58		4	
17	N 012 005 3	lock ring B 5		4	
18	900 025 003 02	washer A 5,3		4	
19	N 010 710 8	pan-head screw AM 6 X 10		1	
20	N 012 226 5	spring washer A 6		1	
-	E 063 903 791	parts kit B + terminal clamp		1	
		- -- E N D -- -			

Model	Year	MG	SG	Illustration	Restrictions	Update	12:58	06.04.2005	PORSCHE PET PORSCHE
924	85	9	02	902-05		187			

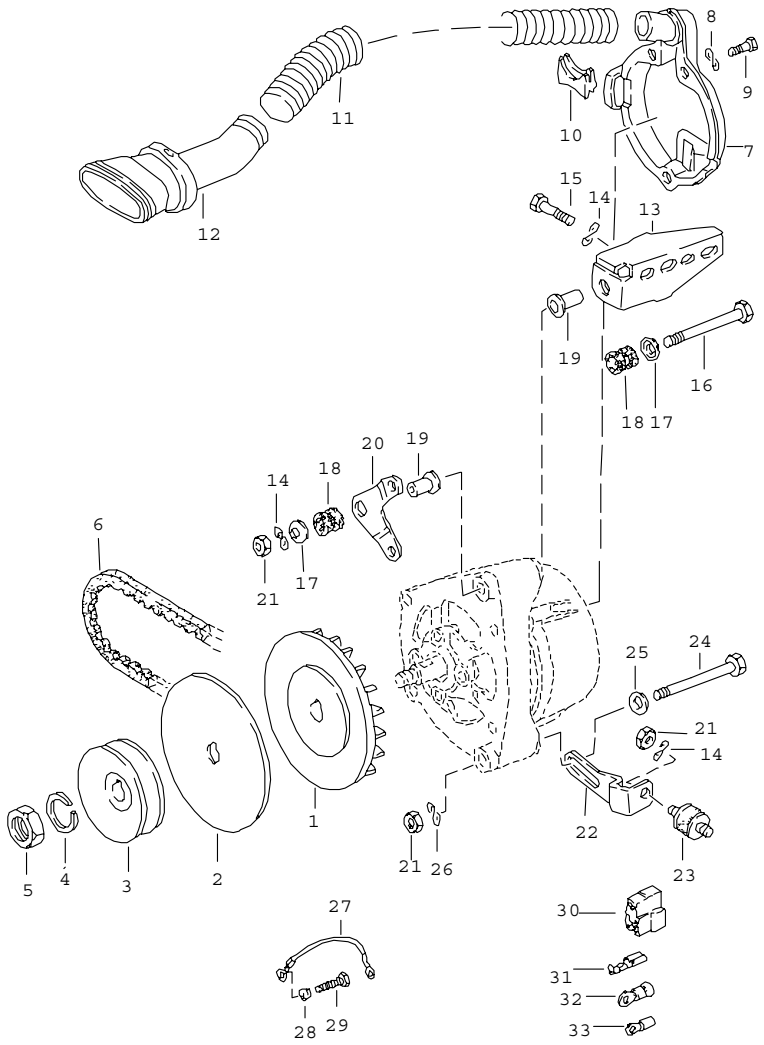

Pos	Part Number	Name	Remarks	Qty	Model
		mounting parts generator			924
1	063 903 171	fan		1	
2	047 903 129	damping washer		1	
3	046 903 119	v-belt pulley $ 66	-80	1	
3	035 903 119 C	pulley $ 61	81-	1	
4	N 012 016 1	lock ring A 14		1	
5	900 078 005 01	hexagon nut M 14 X 1,5		1	
(6)	E 047 903 137 A	v-belt for pulley 66 $	-80	1	
6	999 192 200 50	v-belt for pulley 61 $	81-	1	
7	046 903 187 A	protection cap		1	
8	N 012 226 5	spring washer B 6		3	
9	999 072 005 09	hexagon-head bolt M 6 X 12		3	
10	046 903 201 A	intermediate piece		1	
11	477 819 395	hose		1	
-	N 024 090 1	hose clamp		1	
12	047 903 199	connection piece		1	
13	046 903 143 A	support	/LL	1	
(13)	047 903 143	support	/RL	1	
14	N 012 241 11	spring washer B 8		4	
15	N 010 239 11	hexagon-head bolt M 8 X 18		4	
16	N 010 391 4	hexagon-head bolt BM 8 X 95	/LL	1	

Pos	Part Number	Name	Remarks	Qty	Model	Pos	Part Number	Name	Remarks	Qty	Model
(16)	N 044 731 1	pan-head screw M 8 X 105	/RL	1							
17	059 903 265 A	concave washer		2							
18	059 903 263 A	bush	/LL	2							
(18)	047 131 117 A	rubber mounting	/RL	2							
(18)	047 903 149 A	rubber mounting	/RL	1							
19	059 903 127 A	sleeve	/LL	1							
(19)	047 131 123	sleeve	/RL	1							
20	046 903 145 A	support	/LL	1							
(20)	E 047 903 141	support	/RL	1							
21	N 011 008 8	hexagon nut M 8		3							
22	046 903 255 A	clamp	/LL	1							
(22)	046 903 255 B	clamp	/RL	1							
23	047 903 149	rubber mounting		1							
24	N 010 370 5	hexagon-head bolt M 8 X 70		1							
25	823 711 815	washer A 8		1							
26	N 012 229 3	spring washer A 8		1							
27	059 971 233 C	ground strap		1							
28	N 012 226 5	spring washer B 6		1							
29	N 010 210 13	hexagon-head bolt M 6 X 10		1							
30	821 971 970	terminal sleeve housing		1							
31	111 971 959	flat receptacle 6,3 X 3		X							
32	111 971 947 B	cable shoe A 5 X 6		X							
33	111 971 949 B	cable shoe A 5 X 2,5		X							
		- -- E N D -- -									

Model	Year	MG	SG	Illustration	Restrictions	Update	12:58	06.04.2005	PORSCHE PET PORSCHE
924	85	9	02	902-06		187			

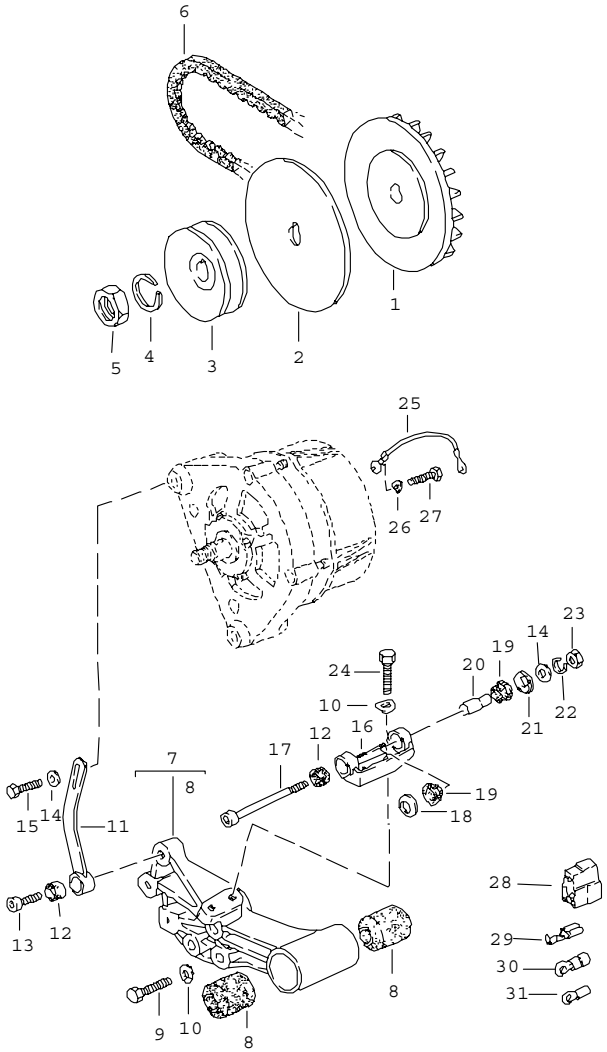

Pos	Part Number	Name	Remarks	Qty	Model
		mounting parts generator			TURBO,GT
1	063 903 171	fan		1	
2	047 903 129	damping washer		1	
3	035 903 119 C	pulley $ 61		1	
4	N 012 016 1	lock ring A 14		1	
5	900 078 005 01	hexagon nut M 14 X 1,5		1	
(6)	999 192 154 50	v-belt	-80	1	
6	999 192 177 50	v-belt	81-	1	
7	931 101 014 00	bracket		1	
8	047 260 905 C	rubber mounting		2	
9	E 900 074 065 02	hexagon-head bolt M 10 X 70		1	
(9)	900 074 063 02	hexagon-head bolt M 10 X 55		2	
10	900 028 032 02	spring washer B 10		5	
11	931 603 115 00	clamp		1	
12	931 603 117 00	rubber mounting		2	
13	900 119 004 02	pan-head screw M 8 X 30		1	
14	928 111 181 00	washer		2	
15	900 075 083 02	hexagon-head bolt M 8 X 25		1	
16	931 603 113 00	holder		1	
17	N 044 774 1	pan-head screw M 8 X 140		1	
18	931 603 129 00	concave washer		1	
19	931 603 119 01	rubber mounting		2	
20	931 603 125 00	sleeve		1	
21	931 603 129 01	concave washer		1	

Pos	Part Number	Name	Remarks	Qty	Model	Pos	Part Number	Name	Remarks	Qty	Model
22	900 142 002 01	lock ring		1							
23	900 076 025 02	hexagon nut M 8		1							
24	900 075 111 08	hexagon-head bolt M 10 X 30		2							
25	059 971 233 C	ground strap		1							
26	N 012 226 5	spring washer B 6		1							
27	N 010 210 13	hexagon-head bolt M 6 X 10		1							
28	821 971 970	terminal sleeve housing		1							
29	111 971 959	flat receptacle 6,3 X 3		X							
30	111 971 947 B	cable shoe A 5 X 6		X							
31	111 971 949 B	cable shoe A 5 X 2,5		X							
		- -- E N D -- -									

Model	Year	MG	SG	Illustration	Restrictions	Update	12:59	06.04.2005	PORSCHE PET PORSCHE
924	85	9	02	902-10		187			

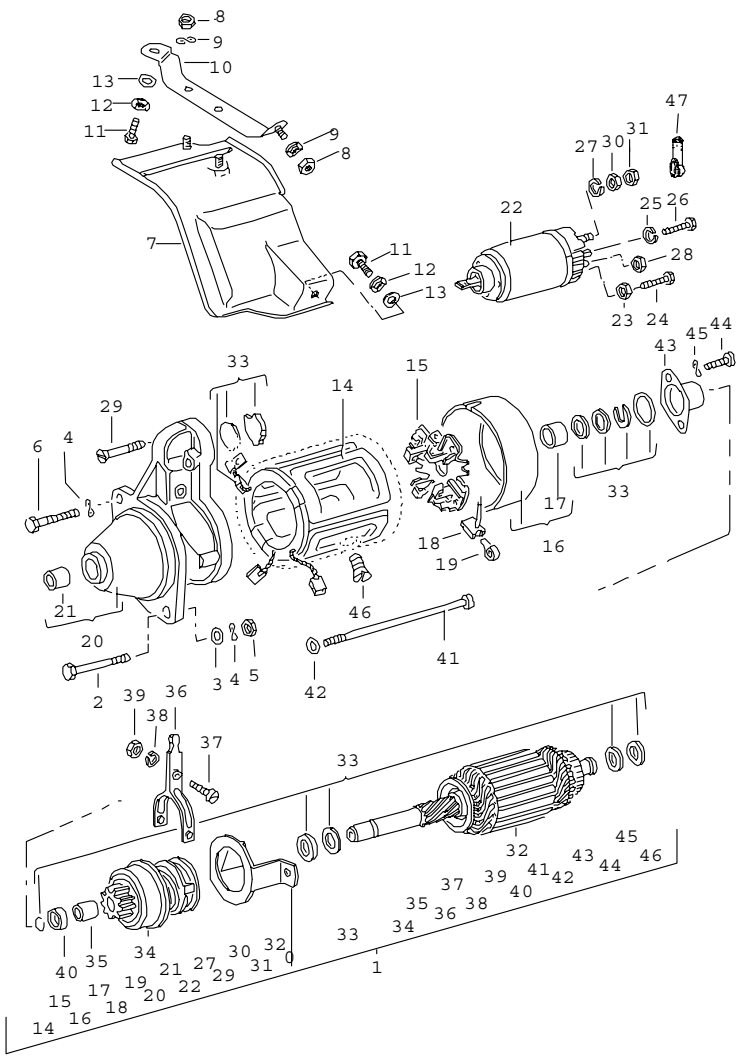

Pos	Part Number	Name	Remarks	Qty	Model
		starter			
1	> 059 911 023 F	starter 0,6 KW		1	924
1	> 035 911 023 N	starter 1,1 KW		1	924,AUT.
(1)	> 951 604 101 00	starter 1,1 KW		1	TURBO,GT
2	N 010 488 1	hexagon-head bolt M 12 X 85		1	924
2	059 911 249 B	screw		1	924
(2)	N 010 491 1	hexagon-head bolt M 12 X 50		1	TURBO,GT
3	N 011 531 7	washer A 13		1	
4	N 012 232 5	spring washer B 12		2	
5	N 011 030 4	hexagon nut M 12		1	
6	N 010 476 3	screw M 12 X 75		1	924
(6)	N 040 253 1	hexagon-head bolt M 12 X 35		1	TURBO,GT
7	047 911 045	cover		1	924
8	900 076 010 02	hexagon nut M 6		3	924
9	N 012 226 5	spring washer B 6		3	924
10	047 911 061	support		1	924
11	900 075 078 02	hexagon-head bolt M 8 X 15		2	924
12	N 012 241 11	spring washer B 8		2	924
13	N 011 525 13	washer A 8,4		2	924
14	E 059 911 115 B	field coil		1	924
15	E 311 911 209 A	retainer plate		1	924
16	E 056 911 211	commutator bracket		1	924

Pos	Part Number	Name	Remarks	Qty	Model
17	E 111 911 213 A	bearing sleeve		1	924
18	E 311 911 215 A	set		1	924
19	E 059 911 219 A	compression spring		1	924
20	E 059 911 255 B	bearing		1	924
21	014 301 155	bearing sleeve		1	924
22	059 911 287 B	solenoid switch		1	924
23	N 011 005 14	hexagon nut M 5		1	TURBO,GT
24	N 010 201 2	hexagon-head bolt M 4 X 8		1	924
25	N 012 005 3	lock ring B 5		1	924
(25)	N 012 004 2	lock ring B 4		1	TURBO,GT
26	N 010 225 4	hexagon-head bolt M 5 X 8		1	924
27	900 027 015 02	lock ring B 8		3	924
28	N 011 008 8	hexagon nut M 8		1	924
29	E 052 911 299	screw		3	924
30	N 011 118 14	hexagon nut BM 8		1	924
31	N 011 008 8	hexagon nut M 8		1	924
32	E 059 911 311 B	armature		1	924
33	E 028 911 320	parts kit		1	924
34	E 059 911 335	pinion drive		1	924
35	E 059 911 339	shift bush		1	924
36	E 311 911 365	gearshift lever		1	924
37	E 311 911 383	screw		1	924
38	N 012 006 4	lock ring B 6		1	924
39	N 011 116 5	hexagon nut BM 6		1	924
40	E 028 911 479	stop ring		1	924
41	E 059 911 491 A	screw		1	924
42	E 059 911 493 A	washer		2	924
43	E 113 911 495	cap		1	924
44	900 014 067 02	pan-head screw M 4 X 8		2	924
45	E N 012 224 1	spring washer B 4		2	924
46	E N 010 999 1	countersunk-head screw M 10 X 13,5		4	924
47	999 659 006 50	protection cap		1	TURBO,GT

- -- E N D -- -

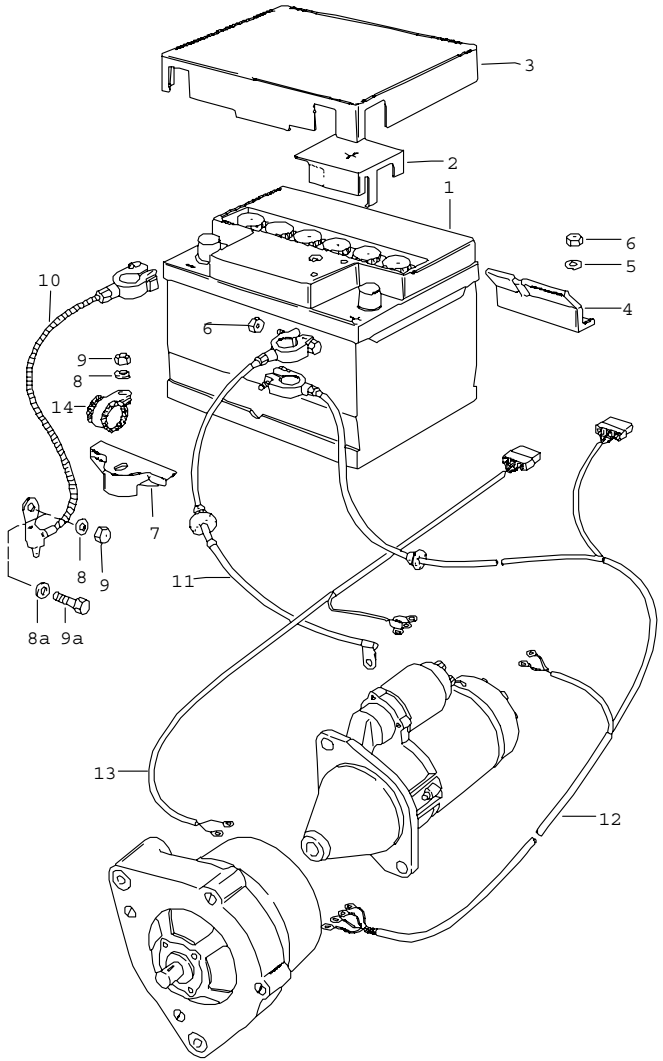

Pos	Part Number	Name	Remarks	Qty	Model
		battery harnesses			
1	999 611 053 20	battery 50 AH	/LL	1	
(1)	477 915 105	battery 45 AH	/RL	1	
(1)	477 915 107 A	battery 63 AH	/LL	1	
2	477 915 429	pole covering	/RL	1	
3	281 915 411 F	battery cover		1	
(3)	477 915 411 A	battery cover for battery 63 AH		1	
4	477 915 315	clip		1	
5	900 151 029 02	washer B 6,4		2	
6	900 076 010 02	hexagon nut M 6		3	
7	914 611 233 10	tension terminal		1	
8	311 827 181	washer	-81	2	
8A	N 012 008 5	washer	82-	1	
9	N 011 008 8	hexagon nut M 8	-81	2	
9A	N 010 239 11	hexagon-head bolt M 8 X 18	82-	1	
10	477 971 221	ground strap		1	924
11	477 971 225 B	line battery starter	/LL -81	1	924
(11)	477 971 224 A	line battery starter	/LL 82-	1	924
(11)	478 971 224	battery-starter cable battery starter	/RL	1	924

Pos	Part Number	Name	Remarks	Qty	Model
12	E 477 971 223	harness battery starter generator	/LL -80	1	TURBO
(12)	477 971 223 A	line battery starter generator	/LL 81	1	TURBO,GT
(12)	E 477 971 223 B	line battery starter generator	/LL 82-	1	TURBO,
(12)	478 971 223	line battery starter generator	/RL -80	1	TURBO
(12)	478 971 223 A	line battery starter generator	/RL 81-	1	TURBO,GT
(13)	E 047 971 224 A	battery-starter cable battery starter	/LL	1	924
(13)	478 971 226	harness battery starter	/RL	1	924
14	E 999 511 137 02	clip	82-	1	
		- -- E N D -- -			

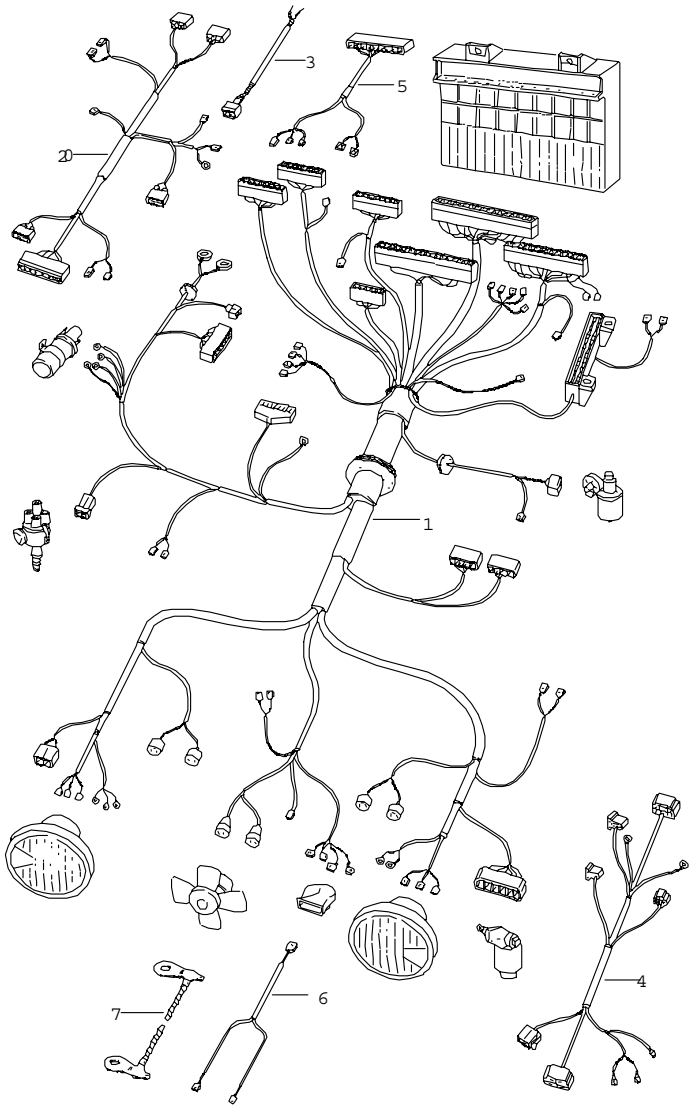

Pos	Part Number	Name	Remarks	Qty	Model
		harnesses engine compartment			
(1)	477 971 071 DC	wiring harness engine compartment	/LL 80	1	924
1	E 477 971 071 KA	wiring harness engine compartment	/LL 80	1	924,M 573
1	477 971 071 GA	wiring harness engine compartment	/LL 80	1	TURBO
1	477 971 071 NA	wiring harness engine compartment	/LL 80	1	TURBO,M 573
1	E 478 971 071 AB	wiring harness engine compartment	/RL 80	1	924
1	478 971 071 CA	wiring harness engine compartment	/RL 80	1	924,M 573
1	E 478 971 071 BA	wiring harness engine compartment	/RL 80	1	TURBO
1	E 478 971 071 DA	wiring harness engine compartment	/RL 80	1	TURBO,M 573
		F 92BN4 00001>>92CN4 02197 F 93BN1 00001>>93CN1 00305	81 81		924 TURBO
1	477 971 071 DD	wiring harness engine compartment	/LL	1	924
1	477 971 071 KB	wiring harness engine compartment	/LL	1	924,M 573
1	477 971 071 GB	wiring harness engine compartment	/LL	1	TURBO,GT
1	477 971 071 NB	wiring harness engine compartment	/LL	1	TURBO,GT, M 573
1	478 971 071 AC	wiring harness engine compartment	/RL	1	924
1	478 971 071 CB	wiring harness engine compartment	/RL	1	924,M 573
1	478 971 071 BB	wiring harness engine compartment	/RL	1	TURBO,GT
1	478 971 071 DB	wiring harness engine compartment	/RL	1	TURBO,GT, M 573
		F 92CN4 02198>> F 93CN1 00306>>	81- 81-		924 TURBO

Pos	Part Number	Name	Remarks	Qty	Model
1	477 971 071 DE	wiring harness engine compartment	/LL -83	1	924
1	477 971 071 DF	wiring harness engine compartment	/LL 84	1	924
1	477 971 071 DG	wiring harness engine compartment	/LL 85	1	
1	477 971 071 KC	wiring harness engine compartment	/LL -83	1	924,M 573
1	477 971 071 KE	wiring harness engine compartment	/LL 84	1	924,M 573
1	477 971 071 KF	wiring harness engine compartment	/LL 85	1	M 573
1	477 971 071 GC	wiring harness engine compartment	/LL	1	TURBO
1	477 971 071 NC	wiring harness engine compartment	/LL	1	TURBO,M 573
1	478 971 071 AD	wiring harness engine compartment	/RL -83	1	924
1	478 971 071 AE	wiring harness engine compartment	/RL 84	1	924
1	478 971 071 AF	wiring harness engine compartment	/RL 85	1	
1	478 971 071 CC	wiring harness engine compartment	/RL -83	1	924,M 573
1	478 971 071 CD	wiring harness engine compartment	/RL 84	1	924,M 573
1	478 971 071 CE	wiring harness engine compartment	/RL 85	1	M 573
1	478 971 071 BC	wiring harness engine compartment	/RL	1	TURBO
1	478 971 071 DC	wiring harness engine compartment	/RL	1	TURBO,M 573
1	477 971 071 LD	wiring harness engine compartment	/LL 84-	1	M 215
(2)	E 477 971 761 BA	wiring harness engine	-80	1	924
(2)	E 477 971 761 BC	wiring harness engine	81-	1	924
2	477 971 761 F	wiring harness engine	-80	1	TURBO
(2)	477 971 761 G	wiring harness engine	81-	1	TURBO,GT
3	477 971 469 A	harness tsz switch unit	/LL	1	
(3)	477 971 469 C	wiring harness tsz switch unit	/RL	1	
4	E 477 971 563	wiring harness air conditioner F >>92CN4 02197 F >>93CN1 00305	/LL	1	M 573 924 TURBO
4	477 971 563 A	wiring harness air conditioner F 92CN4 02198>> F 93CN1 00306>>		1	M 573 924 TURBO
(4)	478 971 561 A	wiring harness air conditioner	/RL	1	M 573
-	E 477 971 973	wiring harness headlight washer system		1	
5	477 971 205	wiring harness		1	
6	477 971 322 A	double line		1	
(7)	477 971 235	ground strap engine body		1	
(7)	477 971 351	ground strap charge air cooler body		1	GT

- -- E N D -- -

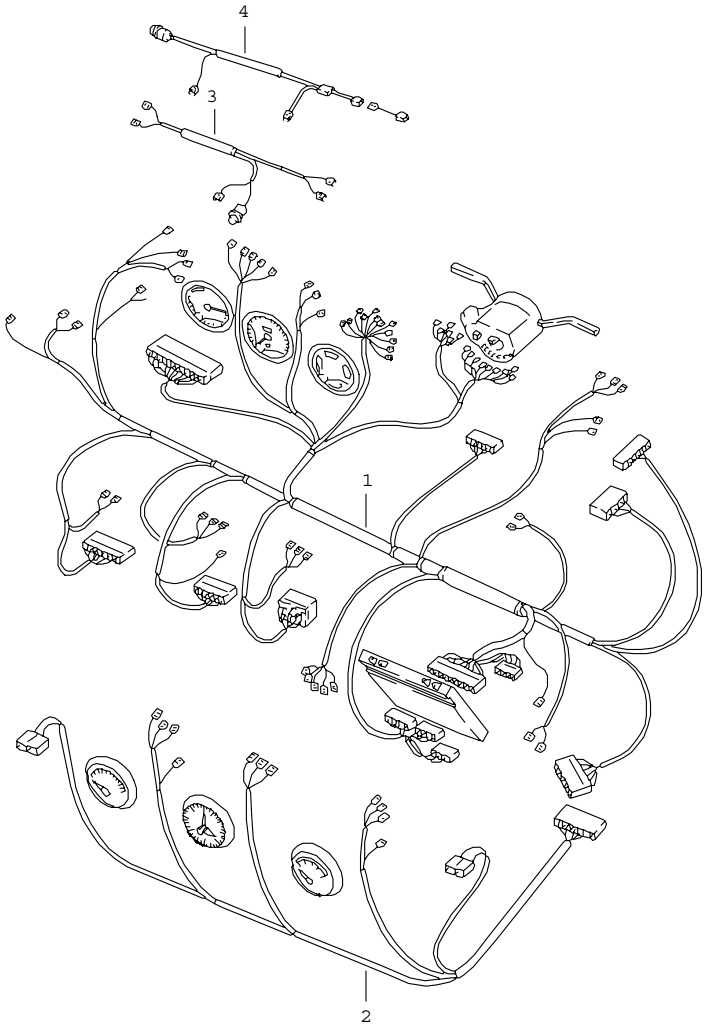

Pos	Part Number	Name	Remarks	Qty	Model
		harnesses dashboard centre console lifting roof			
1	477 971 050 DC	wiring harness dashboard	/LL 80	1	
1	478 971 050 BB	wiring harness dashboard	/RL 80	1	
1	477 971 050 FC	wiring harness dashboard	/LL 80	1	924,AUT
1	E 478 971 050 CB	wiring harness dashboard	/RL 80	1	924,AUT
		F 92BN4 00001>>92CN4 02197 F 93BN1 00001>>93CN1 00305			924 TURBO
1	477 971 050 DD	wiring harness dashboard	/LL	1	
1	478 971 050 BC	wiring harness dashboard	/RL	1	
1	477 971 050 FD	wiring harness dashboard	/LL	1	924,AUT.
1	478 971 050 CC	wiring harness dashboard	/RL	1	924,AUT.
		F 92CN4 02198>> F 93CN1 00306>>			924 TURBO
1	477 971 050 DF	wiring harness dashboard	/LL -83	1	
1	477 971 050 DG	wiring harness dashboard	/LL 84-	1	
1	E 478 971 050 BE	wiring harness dashboard	/RL -83	1	
1	478 971 050 BF	wiring harness dashboard	/RL 84-	1	
1	477 971 050 FF	wiring harness dashboard	/LL	1	924,AUT.
1	478 971 050 CE	wiring harness dashboard	/RL -83	1	924,AUT.
1	478 971 050 CF	wiring harness dashboard	/RL 84-	1	M 249
1	477 971 050 EG	wiring harness dashboard	/LL 84-	1	M 215

Pos	Part Number	Name	Remarks	Qty	Model
		F 92BN4 50001>>92CN4 02197			924(J)
		wiring harness centre console			
2	477 971 196 D	harness centre console	80	1	
2	E 477 971 196 C	wiring harness	80	1	M 573
		F 92BN4 00001>>92CN4 02197 F 93BN1 00001>>92CN1 00305			924 TURBO
2	E 477 971 196 DA	wiring harness centre console		1	
2	E 477 971 196 CA	wiring harness centre console		1	M 573
		F 92CN4 02198>> F 93CN1 00306>>			924 TURBO
2	477 971 196 DB	wiring harness centre console		1	
2	477 971 196 CB	harness centre console		1	M 573
4	478 971 109 B	wiring harness additional headlamp	/RL	1	
-	944 612 121 00	wiring harness lifting roof	84-	1	M 650
		- -- E N D -- -			

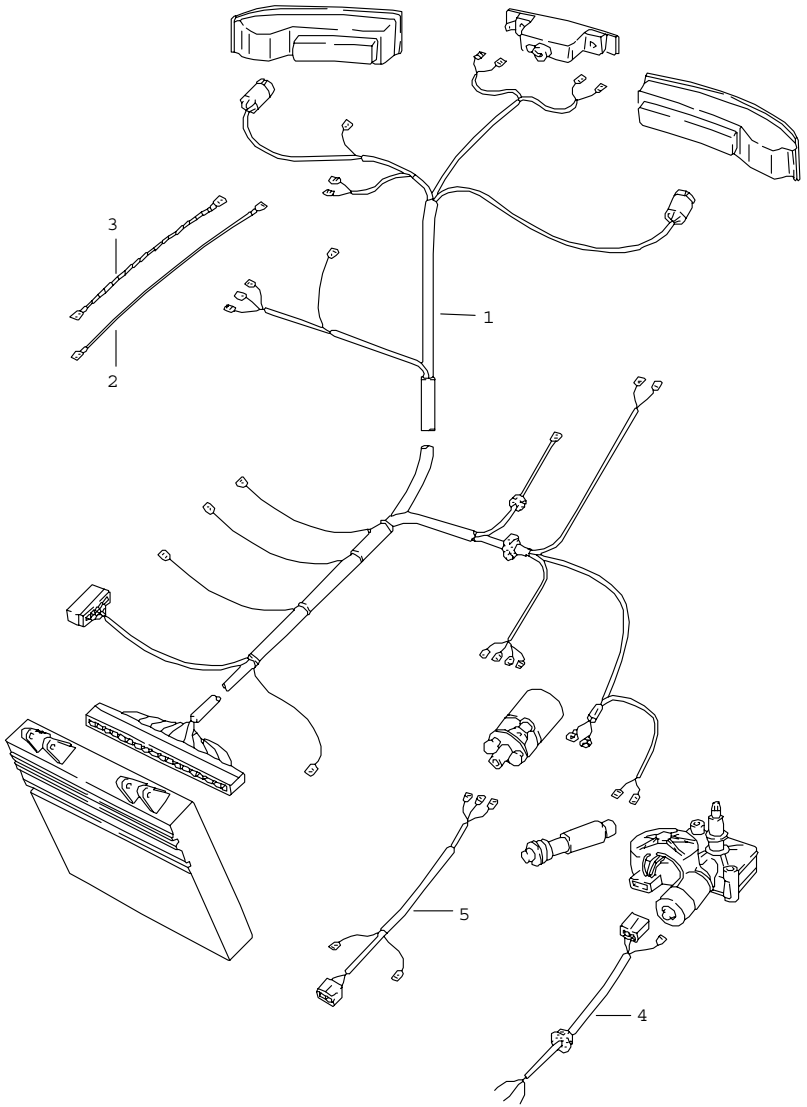

Pos	Part Number	Name	Remarks	Qty	Model
		harnesses rear end			
1	477 971 011 DB	wiring harness rear end when required order also: 171.971.519 A	-83	1	
(1)	477 971 011 DE	wiring harness rear end	84-	1	924
(1)	477 971 011 CB	wiring harness rear end when required order also: 171.971.519 A	-83	1	924,AUT.
(1)	477 971 011 CE	wiring harness rear end	84-	1	924,AUT.
2	477 971 257 B	line gas-filled strut rear window		2	
3	477 971 263 B	ground strap gas-filled strut		2	
4	477 971 345	harness rear window wiper	-82	1	
(4)	477 971 345 A	harness rear window wiper	83-	1	
5	477 971 346	wiring harness rear window wiper		1	
		- -- E N D -- -			

Model	Year	MG	SG	Illustration	Restrictions	Update	13:00	06.04.2005	PORSCHE PET PORSCHE
924	85	9	02	902-35		187			

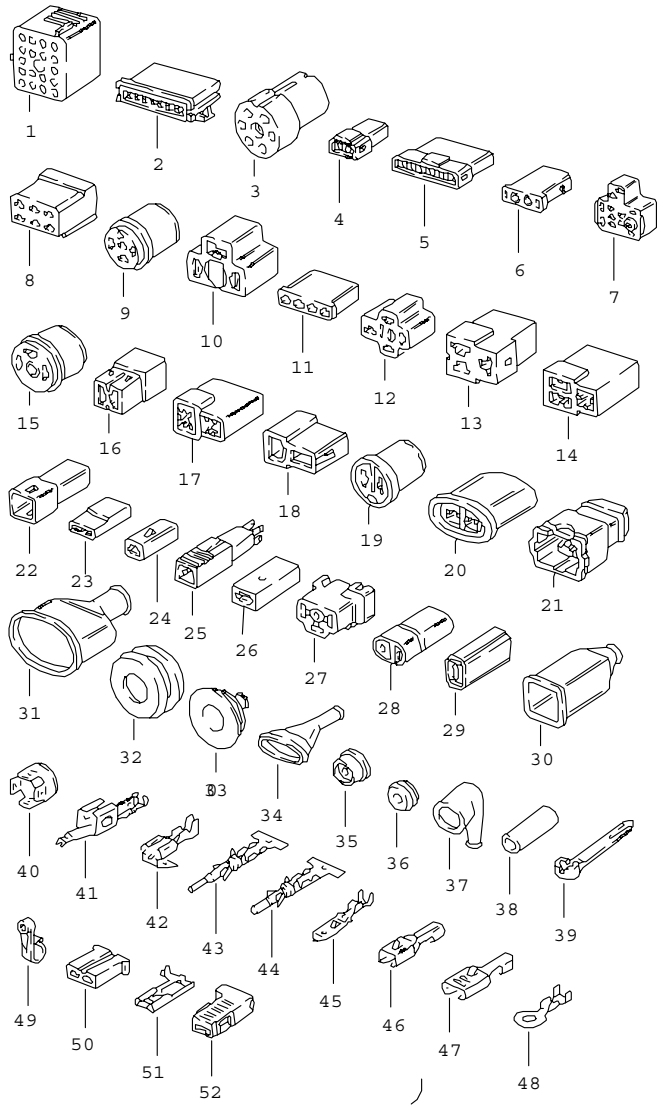

Pos	Part Number	Name	Remarks	Qty	Model
		connector housing			
1	171 971 971	connector housing yellow 20-pole		1	
(1)	171 971 971 A	connector housing black 22-pole		1	
(1)	171 971 971 B	connector housing blue 22-pole		1	
(1)	171 971 971 C	connector housing clear 19-pole		1	
(1)	171 971 971 D	connector housing red 20-pole		1	
(1)	171 971 971 E	connector housing white 19-pole		1	
2	113 971 998 B	connector housing 8-pole		X	
3	803 971 979	plug socket 7-pole		1	
(4)	171 971 998	connector housing single pole		X	
4	171 971 998 A	connector housing 2-pole		X	
(4)	171 971 998 C	connector housing 4-pole		1	
5	171 971 998 E	connector housing 6-pole		X	
(6)	171 971 999	terminal sleeve housing single pole		X	
6	171 971 999 A	terminal sleeve housing 2-pole		X	
(6)	171 971 999 B	terminal sleeve housing 3-pole		X	
(6)	171 971 999 E	connector housing 6-pole		X	
7	477 971 999	terminal sleeve housing light switch		1	

Pos	Part Number	Name	Remarks	Qty	Model
8	803 971 831	terminal sleeve housing 6-pole		1	
(8)	803 971 971	terminal sleeve housing 8-pole		X	
10	914 612 327 10	terminal sleeve housing 3-pole		X	
12	803 971 835 A	terminal sleeve housing 3-pole		1	
13	821 971 970	terminal sleeve housing 3-pole		1	
14	821 971 975	terminal sleeve housing 3-pole		1	
15	113 945 525	terminal sleeve housing 3-pole		6	
16	815 971 989	connector housing 2-pole		X	
17	815 971 988 A	terminal sleeve housing 2-pole		X	
18	815 971 989 A	connector housing 2-pole		X	
19	810 971 993	terminal sleeve housing 2-pole		X	
20	810 971 989	connector housing 2-pole		X	
21	022 906 231 A	connector housing 2-pole		X	
22	823 971 976	connector housing single pole		X	
23	825 971 990	terminal sleeve housing single pole		X	
(23)	431 971 995	terminal sleeve housing single pole		X	
24	823 971 990	terminal sleeve housing single pole		X	
26	111 971 977	plug with guide		X	
28	914 612 417 10	fuse holder		1	
29	111 971 921	protection cap for flat connector		X	
(29)	111 971 921 B	connector housing for flat connector		X	
30	803 957 855 B	protective grommet for connector housing		1	
31	431 971 866	protective grommet for terminal sleeve housing		1	
32	477 971 871 B	rubber sleeve harness engine compartment		X	
33	477 971 911	protective grommet harness starter battery		1	
34	022 906 102	protection cap		1	
35	411 941 189	grommet		X	
36	477 971 909	rubber sleeve		X	
(36)	111 941 189	drain bush		X	
37	E 113 927 249	protection cap		X	
38	059 971 891	sleeve		X	
39	477 971 850 A	tie-wrap starter cable		X	
(39)	N 020 902 1	tie-wrap 120 X 6,5		X	
(39)	999 513 001 40	tie-wrap 140 X 3,6		X	
(39)	999 513 049 40	tie-wrap	82-	X	
(39)	999 513 010 40	tie-wrap		X	
40	171 971 519 A	ground connector		1	
41	999 652 275 10	contact		X	
42	N 017 242 1	flat receptacle with clips 6,3 X 1		X	
43	N 017 589 4	round connector with clips 1,6 X 1		X	

Pos	Part Number	Name	Remarks	Qty	Model
(43)	N 017 586 2	round connector with clips 2,1 X 1		X	
44	N 017 593 4	cylindrical connector with clips 1,6 X 1		X	
(44)	N 017 592 2	cylindrical connector 1,6 X 2,5		X	
45	E 111 971 985	flat plug with clips 6,3 X 1		X	
(45)	N 017 457 2	flat plug with clips 2,8 X 1		X	
(45)	111 971 986	flat plug with clips 6,3 X 2,5		X	
46	111 971 958	flat receptacle with clips 2,8 X 0,8		X	
(46)	111 971 958	flat receptacle with clips 2,8 X 1		X	
(46)	111 971 958	flat receptacle with clips 2,8 X 1		X	
(46)	N 017 243 1	flat receptacle with clips 2,8 X 1,5		X	
47	111 971 959	flat receptacle with clips 6,3 X 0,8		X	
(47)	111 971 959	flat receptacle with clips 6,3 X 1		X	
(47)	999 652 106 02	flat receptacle 6,3 X 1,5		X	
(47)	N 017 491 8	flat receptacle with clips 6,3 X 2,5		X	
(47)	N 017 491 8	flat receptacle with clips 6,3 X 2,5		X	
48	N 017 518 2	cable shoe 8 X 2,5		X	
(48)	N 017 516 2	cable shoe 6 X 1		X	
(48)	N 017 515 4	cable shoe 5 X 1		X	
(48)	N 017 505 4	cable shoe 5 X 0,5		X	
49	477 971 853	cable clip	82-	X	
50	171 906 231	connector housing 2-pole		X	
51	N 017 498 2	flat receptacle 6,3 X 2,5		X	
52	211 971 921	protection cap		X	
		- -- E N D -- -			

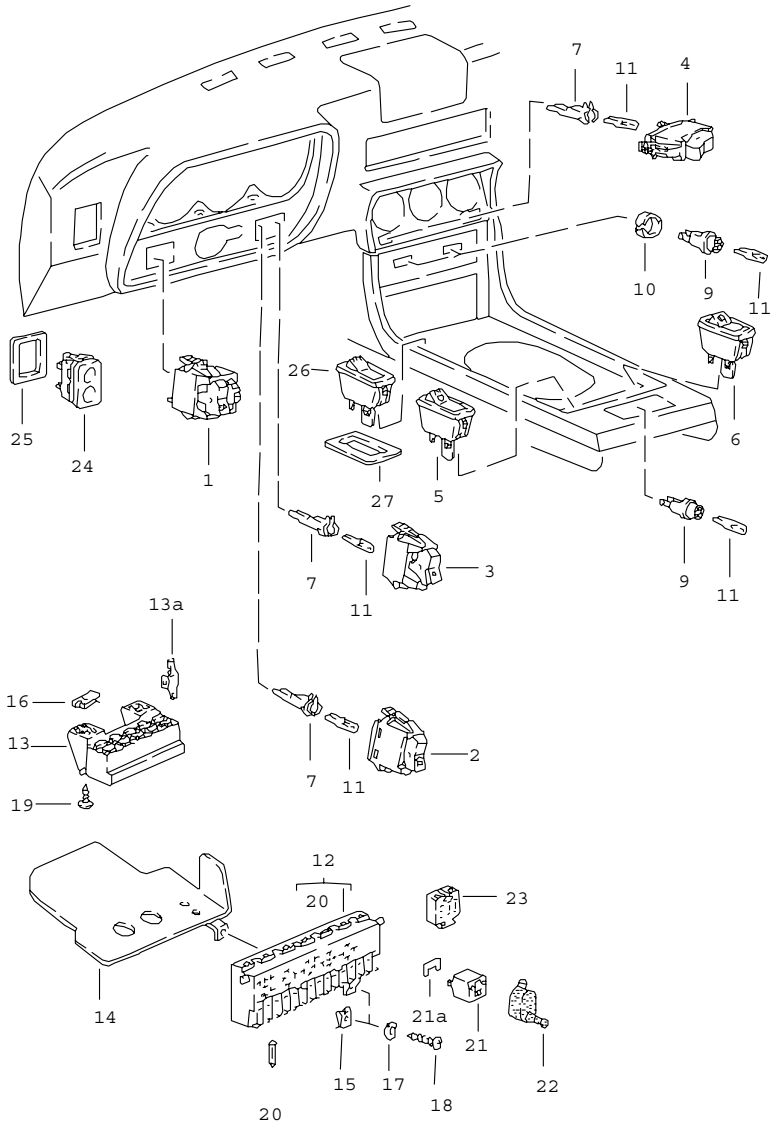

Pos	Part Number	Name	Remarks	Qty	Model
		switch relay plate relay			
1	477 941 531 B	light switch	-80	1	
(1)	477 941 531 F	light switch	81-	1	
2	133 959 621	switch rear window heating	-80	1	
(2)	477 959 623	switch rear window heating	81-	1	
3	477 953 235 A	emergency light switch		1	
4	251 941 535	switch fog headlamp rear fog light		1	
4	477 941 535	switch fog headlamp	-80	1	
(4)	A 944 613 110 00	switch for rear fog light	81	1	
(4)	944 613 110 00	switch for rear fog light use also:	-81	1	
-	944 612 617 00	terminal sleeve housing		1	
5	477 941 563 A	switch additional headlamp		1	
(5)	911 613 113 00	changeover switch		X	
6	477 955 701	rocker switch rear window wiper		1	
(6)	477 955 702	switch headlight washer system		1	
(6)	477 955 703	mirror changeover switch		1	
7	E 141 957 397 A	bulb holder	-80	2	
9	914 631 179 10	bulb holder		3	
10	477 919 333	knob holder		2	
11	900 631 129 90	bulb 12 V, 1,2 W		X	
12	477 941 813	relay plate		1	
13	477 937 511	fuse holder 9-pole		1	
13A	999 652 275 10	contact		X	

Pos	Part Number	Name	Remarks	Qty	Model
14	E 477 941 802	cover	/LL	1	
(14)	478 941 802	cover	/RL	1	
15	N 015 438 1	speed nut B 3,5 X 16,5		1	
16	E N 045 421 1	tapping screw B 4,2		2	
17	N 011 663 1	washer B 3,7		1	
18	900 143 072 02	oval-head sheetmetal screw B 3,5 X 19		1	
19	N 013 964 4	tapping screw B 4,2 X 16		2	
20	N 017 121 1	safety fuse 8 A		X	
(20)	N 017 121 4	safety fuse 16 A		X	
(20)	N 017 121 5	safety fuse 25 A		1	
21	E 411 941 583 B	relay low/high beam	-80	1	
21A	171 937 545	bridge	81-	1	
(21)	111 953 227 D	flasher relay		1	
(21)	141 951 253 B	relay rear window heating		1	M 215
(21)	928 618 102 03	relay warning time relay		1	M 215
(21)	141 951 253 B	relay additional headlamp electric fan rear window heating		3	
(21)	141 951 253 B	relay horn F >>92CN4 07364 F >>93CN1 00926		1	 924 TURBO
(21)	443 963 141	relay horn F 92CN4 07365>> F 93CN1 00927>>		1	 924 TURBO
(21)	477 959 143	relay air conditioner		1	
(21)	477 955 531 A	interval relay		1	
(21)	433 906 059	relay fuel pump		1	
(21)	111 943 383 C	relay engine pop-up headlight		1	
22	477 971 923	protection cap relay engine pop-up headlight		1	
(21)	944 615 103 00	switch unit radio lifting roof	 84-	1 1	 M 650
23	135 937 501 A	terminal sleeve housing		X	
24	944 613 129 00	switch rear lid unlocking device	84-	1	
25	477 867 185 A	mounting piece switch	84-	1	
26	951 613 123 00	switch lifting roof	84-	1	
27	944 613 124 00	rose switch	84-	1	

- -- E N D -- -

Model	Year	MG	SG	Illustration	Restrictions	Update	13:00	06.04.2005	PORSCHE	PET	PORSCHE
924	85	9	03	903-05		187					

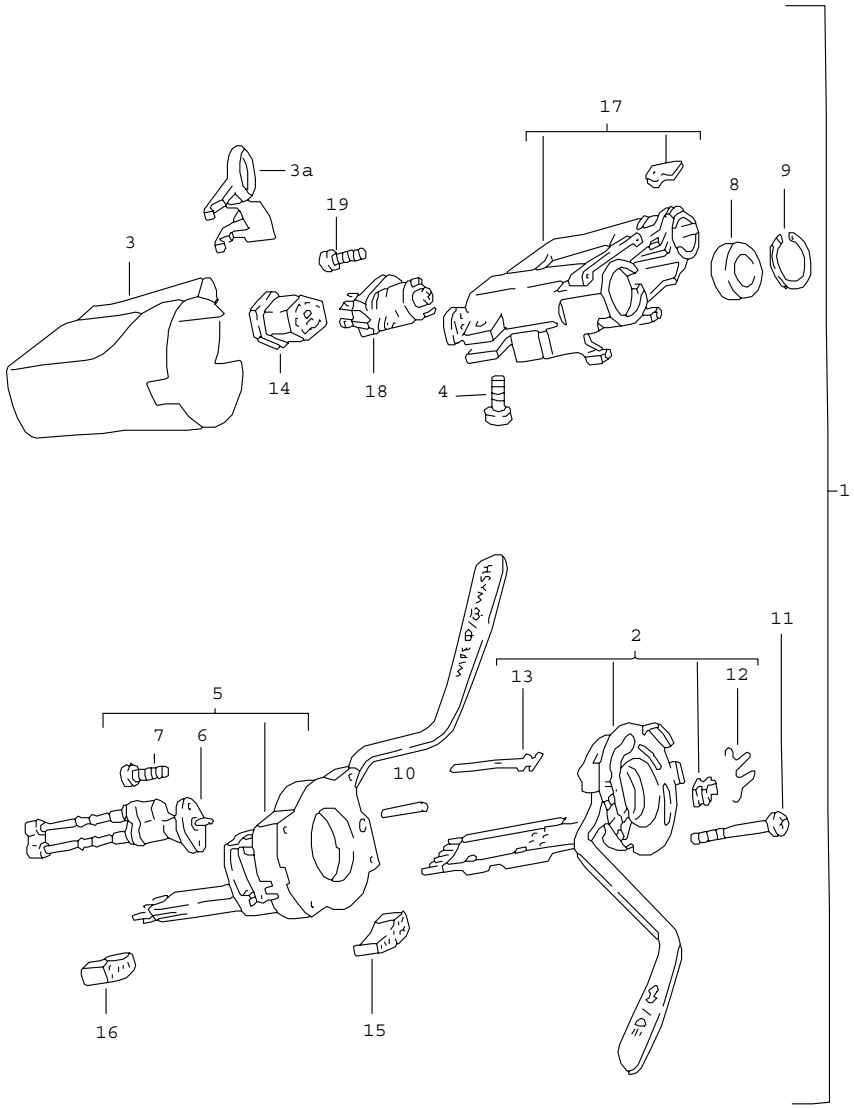

Pos	Part Number	Name	Remarks	Qty	Model
		steering column switch steering lock	-80		
(1)	E 477 953 503 B	steering column switch with steering lock		1	
2	111 953 513 F	direction indicator switch		1	
3	113 953 515	lining		1	
3A	477 953 517	cover		1	
4	N 014 707 4	pan-head screw M 8 X 15		1	
5	111 953 519 G	switch windscreen wiper system windscreen washer system		1	
8	911 347 771 02	ball bearing		1	
9	111 953 563 A	circlip ball bearing		1	
10	111 953 572 A	spacer sleeve		4	
11	111 953 573 A	pan-head screw		4	
12	111 953 575	spring direction indicator switch		1	
13	111 971 983	flat plug 2,8 X 0,8		X	
14	111 953 631	terminal sleeve housing ignition starter switch		1	
15	111 953 633	terminal sleeve housing direction indicator switch		1	
16	111 953 635 A	terminal sleeve housing windscreen wiper system		1	
17	113 905 851 A	steering lock without ignition starter switch		1	
18	111 905 865 L	ignition starter switch		1	
19	E N 010 802 2	oval-head screw AM 3 X 6		1	
		- -- E N D -- -			

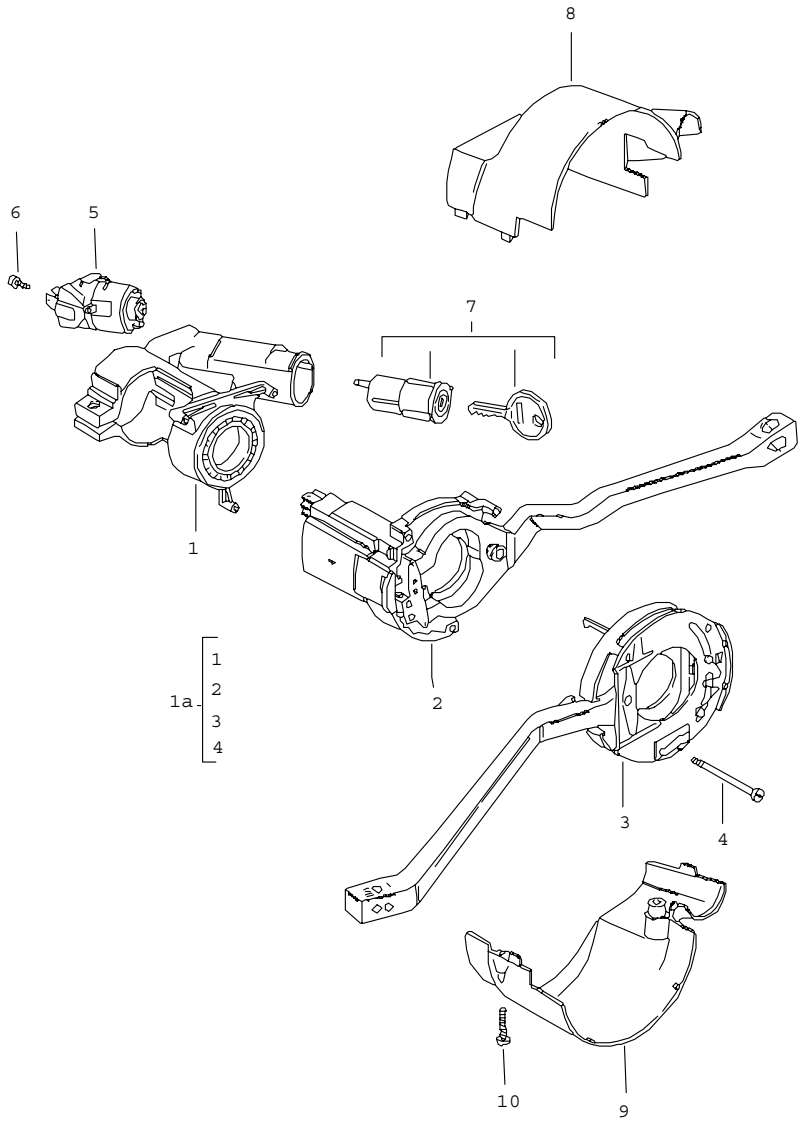

Pos	Part Number	Name	Remarks	Qty	Model
		steering column switch steering lock	81-		
1A	477 953 505	steering column switch with steering lock		1	
	89S	cadbury brown			
1	321 905 851 D	steering lock housing		1	
2	477 953 902	wiper switch		1	
	01C	black			
	89S	brown			
3	477 953 901	direction indicator switch		1	
	01C	black			
	89S	brown			
4	321 953 573	screw		3	
5	111 905 865 L	ignition starter switch		1	
6	900 146 104 02	screw		1	
7	477 905 855 C	lock cylinder w/o stipulated lock number		1	
(7)	477 905 855 D	lock cylinder with stipulated lock-no. key see group 8/04/05		1	
8	477 953 515 B	lining upper part		1	
	1DB	black			
	4RB	cadbury brown			
9	477 953 516 B	lining lower part		1	
	1DB	black			
	4RB	cadbury brown			
10	N 043 959 1	tapping screw B 2,9 X 22		2	
(10)	N 013 953 10	tapping screw 2,9 X 9,5		1	

Pos	Part Number	Name	Remarks	Qty	Model	Pos	Part Number	Name	Remarks	Qty	Model
		- -- E N D -- -									

Model	Year	MG	SG	Illustration	Restrictions	Update	13:01	06.04.2005	PORSCHE PET PORSCHE
924	85	9	03	903-10		187			

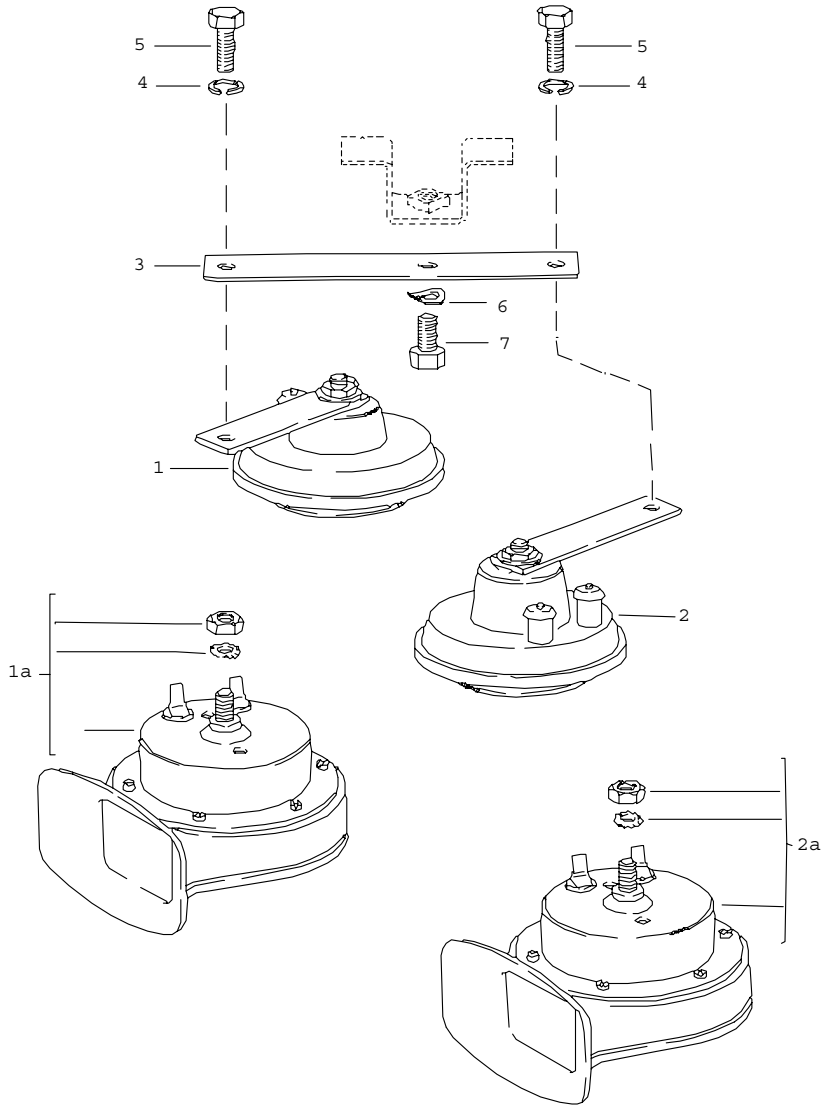

Pos	Part Number	Name	Remarks	Qty	Model
		horn			
1	191 951 113 A	horn low-pitched	-80	1	924
1A	928 635 222 00	fanfare low-pitched	-80	1	TURBO
(1A)	928 635 222 00	fanfare low-pitched	81-	1	
2	944 637 103 01	horn high-pitched	-80	1	924
2A	928 635 221 00	fanfare high-pitched	-80	1	TURBO
(2A)	928 635 221 00	fanfare high-pitched	81-	1	
3	171 951 199 B	support	-80	1	924
(3)	810 951 229	spring clip	-80	1	TURBO
(3)	810 951 229	spring clip	81-	1	
4	900 027 015 02	lock ring B 8	-80	2	924
5	N 010 239 11	hexagon-head bolt M 8 X 18	-80	2	924
6	N 012 228 3	spring washer B 8		1	
7	900 075 078 02	hexagon-head bolt M 8 X 15		1	
		- -- E N D -- -			

Model	Year	MG	SG	Illustration	Restrictions	Update	13:01	06.04.2005	PORSCHE PET PORSCHE
924	85	9	04	904-00		187			

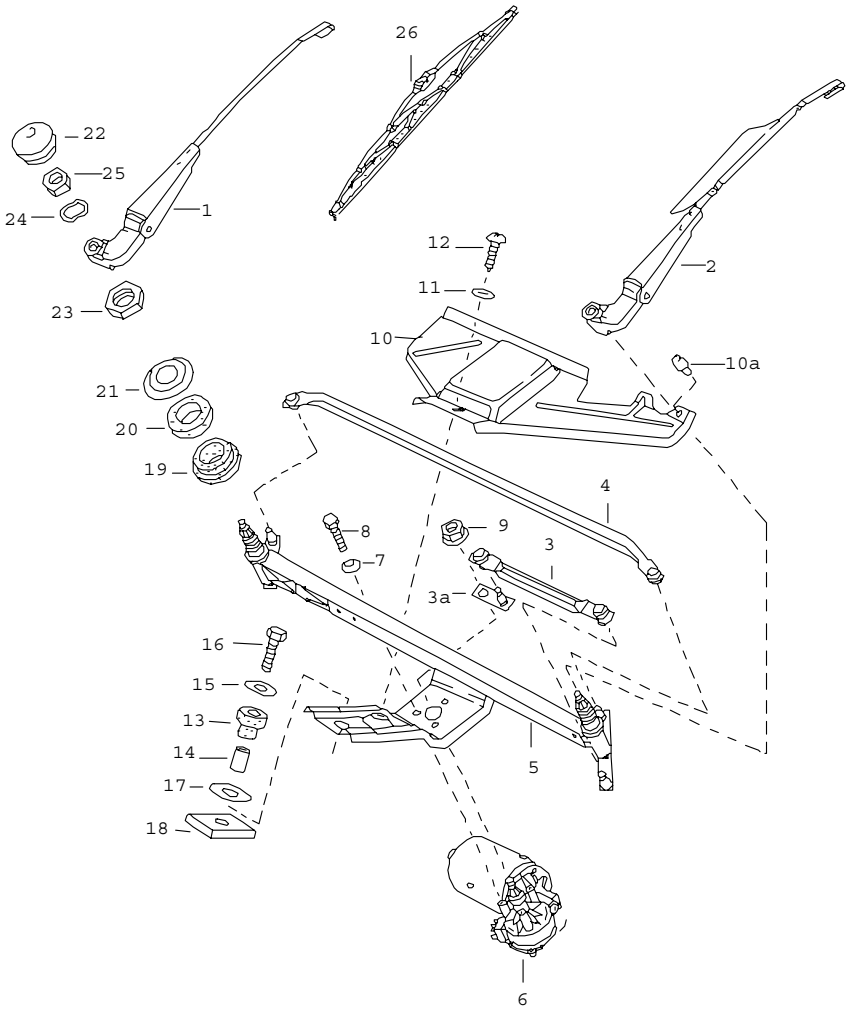

Pos	Part Number	Name	Remarks	Qty	Model
		windscreen wiper system			
1	477 955 028	wiper arm passenger's side	/LL	1	
(1)	477 955 028	wiper arm driver's side	/RL -80	1	
(1)	478 955 027 A	wiper arm driver's side	/RL 81-	1	
(2)	477 955 027	wiper arm with spoiler driver's side	/LL	1	
3	477 955 035 B	connecting rod short		1	
3A	477 955 039 A	crank		1	
4	477 955 036 B	connecting rod long		1	
5	477 955 041 B	frame		1	924/TURBO
(5)	E 937 628 030 01	frame		1	GT
6	477 955 113 B	windscreen wiper motor		1	
7	N 012 105 3	serrated lock washer A 6,4		3	
8	999 072 005 09	hexagon-head bolt M 6 X 12		3	
9	E 999 084 045 02	lock nut M 6		1	
10	477 955 123	cover	/LL	1	
(10)	478 955 123	cover	/RL	1	
10A	E 803 827 589 A	buffer		1	
11	900 151 028 02	washer B 4,3		1	
12	N 013 957 5	tapping screw BZ 3,5 X 9,5		1	
13	477 955 127	rubber bush		1	
14	477 955 128	spacer sleeve		1	
15	900 151 029 02	washer B 6,4		1	

Pos	Part Number	Name	Remarks	Qty	Model
16	N 010 217 4	hexagon-head bolt M 6 X 20		1	
17	281 711 135	washer 12,2 X 28 X 2		1	
18	477 955 129	desk pad		1	
19	901 628 924 00	rubber bush		2	
20	901 628 923 01	rubber bush		2	
21	911 628 963 00	washer		2	
22	477 955 205	cap		2	
23	481 955 243 A	hexagon nut M 16 X 1		2	
24	803 955 437	washer		2	
25	N 011 008 8	hexagon nut M 8		2	
26	477 955 425 B	windscreen wiper blade	80	2	
(26)	478 955 425	wiper blade	81-	2	
		- -- E N D -- -			

Pos	Part Number	Name	Remarks	Qty	Model

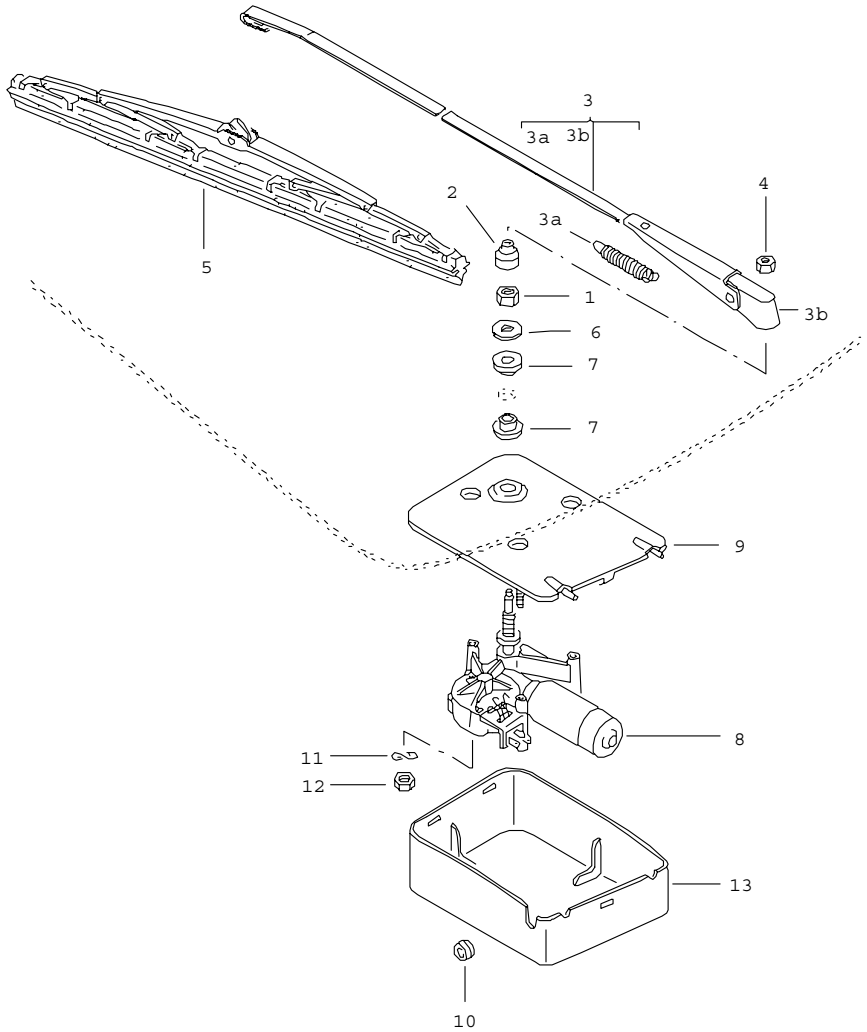

Pos	Part Number	Name	Remarks	Qty	Model
		rear window wiper			M 425
1	311 955 243 A	hexagon nut M 12 X 1		1	
2	211 955 275 A	cap		1	
(3)	477 955 409 A	wiper arm		1	
3A E	477 955 411	spring		1	
3B	477 955 415	cap		1	
4 E	999 084 045 02	lock nut		1	
(5)	928 628 218 01	wiper blade		1	
(6)	477 955 435 A	washer		1	
7	477 955 439	grommet		2	
8	477 955 713 A	wiper motor together with rear lid MOD.88- use also:		1	
-	944 628 071 02	plate		1	
	03C	black			
-	445 955 753	bush		1	
-	533 955 758	grommet		1	
-	944 628 103 00	bush		1	
-	N 014 133 8	oval-head screw M 5 X 12		2	
-	N 011 524 7	washer A 6,4		4	
-	999 209 017 02	spacer sleeve		2	
-	999 702 180 40	rubber sleeve		2	
9	477 955 715 B	plate		1	
10	111 941 189	drain bush		1	
11	N 012 226 5	spring washer B 6		3	
12	900 076 010 02	hexagon nut M 6		3	
13	477 955 737	cap		1	

Pos	Part Number	Name	Remarks	Qty	Model	Pos	Part Number	Name	Remarks	Qty	Model
-	311 949 149 B	grommet for wiring harness		1							
-	171 971 999 A	terminal sleeve housing		1							
		- -- E N D -- -									

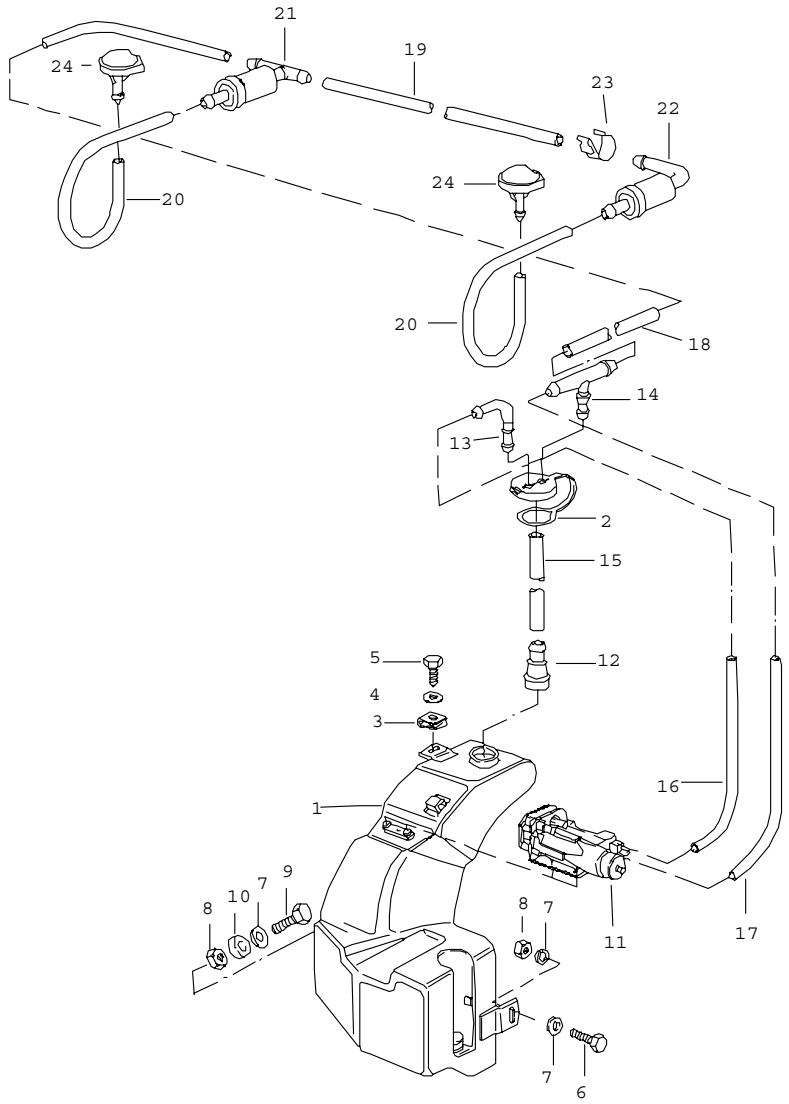

Pos	Part Number	Name	Remarks	Qty	Model
		windscreen washer system			
1	477 955 451 D	water reservoir		1	
2	477 955 455	cover		1	
3	477 955 461	speed nut 6,3 X 22		1	
4	900 151 029 02	washer 6,4		1	
5	N 013 891 1	tapping screw B 6,3 X 19		1	
6	N 010 218 6	hexagon-head bolt M 6 X 25		1	
7	N 011 612 3	washer R 7		4	
8	900 076 010 02	hexagon nut M 6		2	
9	N 010 220 3	hexagon-head bolt M 6 X 30		1	
10	052 109 135	spacer sleeve		1	
11	823 955 651	pump		1	
12	911 628 749 00	t-piece		1	
13	477 955 456	connection piece		1	
14	477 955 459	t-socket		1	
-	N 020 301 1	hose 4 X 1		*	
15	-	500 MM		2	
16	-	260 MM		1	
17	-	280 MM		1	
18	-	1640 MM	-84	1	
19	-	390 MM	-84	1	
20	-	160 MM	-84	2	
-	999 181 722 40	hose 4,6 X 1,8		X	

Pos	Part Number	Name	Remarks	Qty	Model
(18)	-	1680 MM	85-	1	
		500 MM	85-	1	
		250 MM	/R 85-	1	
		330 MM	/L 85-	1	
-	N 100 020 01	clamp	85-	8	
21	914 628 433 00	valve		1	
22	477 955 481	valve		1	
23	477 971 939	cable terminal	-84	4	
(23)	477 955 981	cable terminal	85-	1	
(23)	944 628 181 00	retaining clip		6	
24	914 628 203 11	nozzle	-84	2	
(24)	944 628 911 00	nozzle heatable	-84	2	
(24)	944 628 077 00	nozzle	/R 85-	1	
	01C	black heatable			
(24)	928 628 077 00	nozzle	/L 85-	1	
	70B	black heatable			
		- -- E N D -- -			

Model	Year	MG	SG	Illustration	Restrictions	Update	13:02	06.04.2005	PORSCHE PET PORSCHE
924	85	9	04	904-15		187			

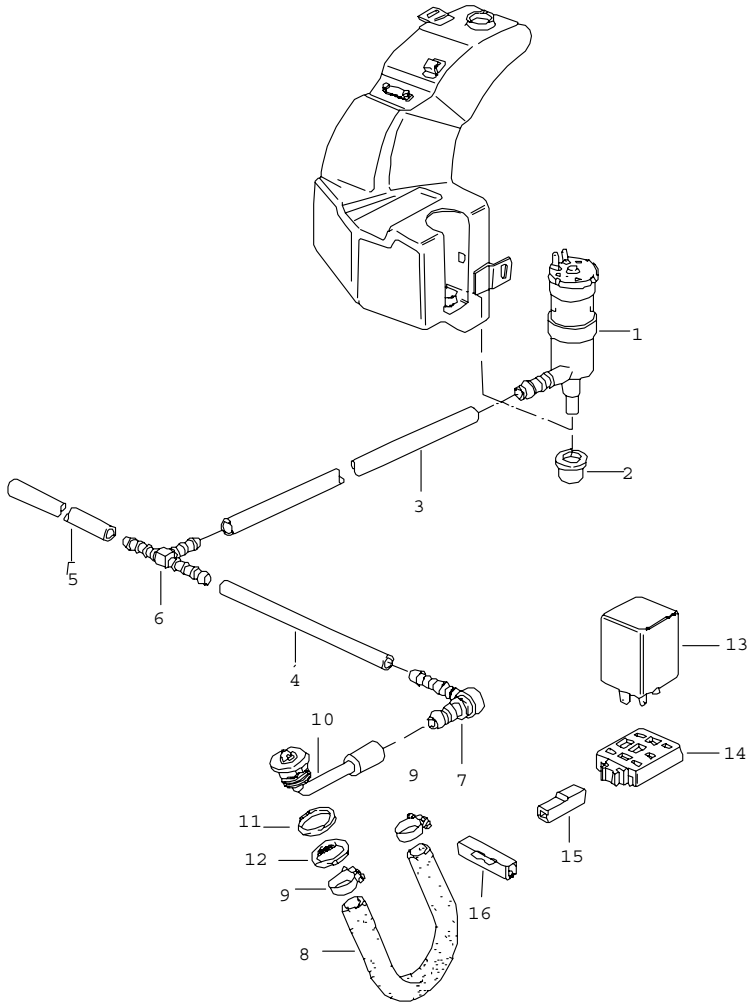

Pos	Part Number	Name	Remarks	Qty	Model
		headlight washer system			M 288
1	191 955 681	pump		1	
2	431 955 465 A	gasket		1	
-	N 020 126 1	pipe 12,5 X 1,25		*	
3	-	410 MM		1	
4	-	890 MM		1	924/TURBO
(4)	-	800 MM		1	GT
5	-	100 MM		1	924/TURBO
(5)	-	60 MM		1	GT
6	113 955 975 B	t-piece		1	
7	477 955 183	pressure control valve		2	
8	928 528 161 02	hose		1	GT
9	N 023 570 2	hose clamp		2	GT
10	477 955 177	jet carrier		2	924/TURBO
(10)	E 937 628 071 00	jet carrier		2	GT
11	937 628 185 00	spacer sleeve		2	GT
12	N 019 121 1	nut MPG 11		2	
13	928 618 111 00	relay		1	
14	135 937 501 A	terminal sleeve housing		1	
15	825 971 990	terminal sleeve housing		1	
16	111 937 077 E	line distributor		1	
		- -- E N D -- -			

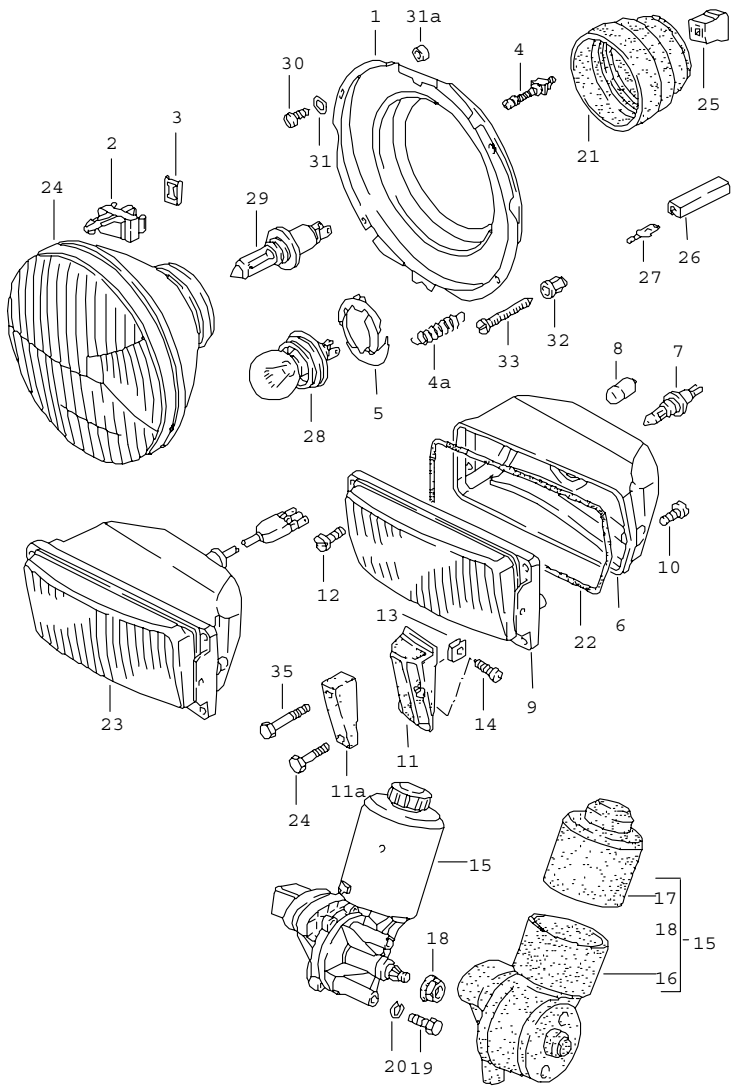

Pos	Part Number	Name	Remarks	Qty	Model
		pop-up headlight electric motor for pop-up headlight additional headlamp			
1	477 941 046	retaining frame		2	
2	321 941 133	articulated piece		2	
3	321 941 135	tab washer for articulated piece		2	
4	113 941 141	adjusting screw		4	
4A	321 941 157	tension spring		2	
6	E 477 941 311	reflector	/L	1	
(6)	477 941 311 A	reflector	/R	1	
7	900 631 126 90	halogen bulb H 3		2	
8	900 631 103 90	bulb 12V 4W		2	
9	944 631 407 00	additional headlamp with retaining frame	/L	1	
(9)	944 631 409 00	additional headlamp yellow with retaining frame	/L	1	(F)
(9)	944 631 408 00	additional headlamp with retaining frame	/R	1	
(9)	E 944 631 410 00	additional headlamp yellow with retaining frame	/R	1	(F)
10	N 014 122 8	oval-head screw M 4 X 8		6	
11	477 807 153	buffer	/L	1	
(11)	477 807 154	buffer	/R	1	
11A	477 807 401	buffer	/L	1	M 058
(11A)	477 807 402	buffer	/R	1	M 058

Pos	Part Number	Name	Remarks	Qty	Model
12	900 146 011 02	oval-head screw AM 4 X 10		6	
13	477 807 191	speed nut		2	
14	900 143 047 07	tapping screw B 4,2 X 19		2	
15	477 941 379 B	electric motor for pop-up headlight		1	924
(15)	477 941 379 C	electric motor for pop-up headlight		1	TURBO/GT
16	477 941 386	protection cap lower		1	924
(16)	477 941 388	protection cap lower		1	TURBO/GT
17	477 941 387	protection cap upper		1	
-	477 941 383	diode for electric motor pop-up headlight		X	
18	E 999 084 045 02	lock nut M 6		1	
(18)	999 084 049 02	lock nut M 8			
19	999 072 005 09	hexagon-head bolt M 6 X 12		3	
20	N 012 006 4	lock ring B 6		3	
21	477 941 659 A	cap for headlamp unit		2	
22	477 941 715	gasket		2	924
23	477 941 751 D	high-beam headlight white	/L	1	
(23)	944 631 409 00	additional headlamp yellow	/L	1	(F)
(23)	477 941 752 D	high-beam headlight white	/R	1	
(23)	944 631 410 00	additional headlamp yellow	/R	1	(F)
24	477 941 771 B	headlamp		2	
(24)	477 941 773	headlamp	/RL	2	
25	111 941 341	terminal sleeve housing 3-pole		2	
26	111 971 977	plug with guide		6	
27	111 971 986	flat plug 6,3 X 0,8 with clips		6	
29	999 631 202 90	halogen bulb H 4		2	
(29)	999 631 202 91	halogen bulb H 4		2	(F)
30	N 013 964 4	tapping screw B 4,2 X 16		8	
(30)	900 143 041 00	tapping screw B 3,9 X 19		8	
31	900 025 003 02	washer A 5,3		8	
31A	477 941 543	spacer sleeve		X	
32	477 857 173	clip		2	
33	N 043 979 2	tapping screw BZ 4,2 X 45		2	
34	E N 030 116 1	oval-head screw M 4 X 25		2	M 058
35	E N 030 117 2	oval-head screw M 4 X 40		2	M 058
		fog headlamp see group 9/98/00			
		- -- E N D -- -			

Model	Year	MG	SG	Illustration	Restrictions	Update				
924	85	9	05	905-10		187	13:03	06.04.2005	PORSCHE	PET	PORSCHE

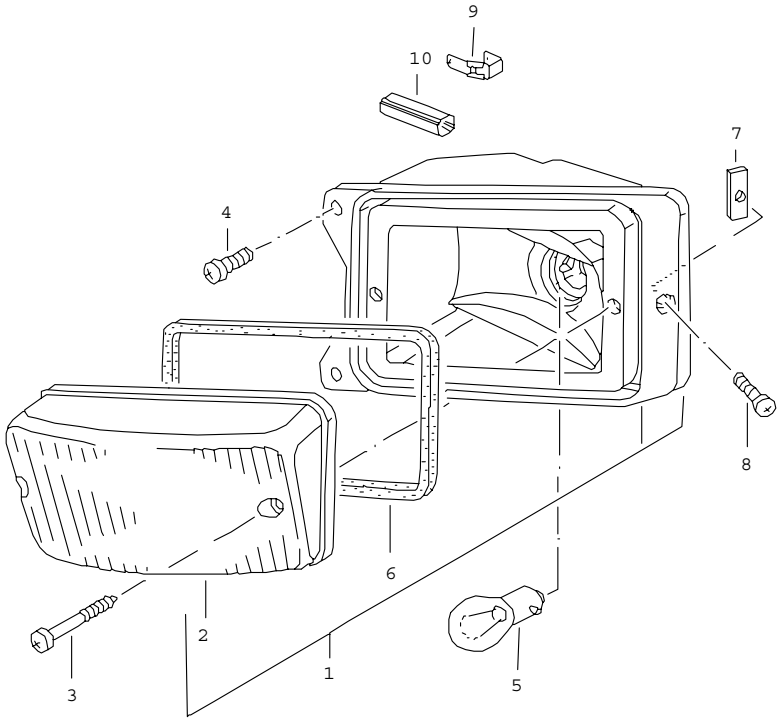

Pos	Part Number	Name	Remarks	Qty	Model
		direction indicator light			
1	477 953 043	direction indicator light	/L	1	
(1)	477 953 044	direction indicator light	/R	1	
2	477 953 161	lens	/L	1	
(2)	477 953 162	lens	/R	1	
3	331 945 185	oval-head screw		4	
4	900 146 011 02	oval-head screw		4	
5	900 631 127 90	bulb RL 12V, 21 W		2	
6	477 953 165	gasket		2	
7	477 953 661	threaded plate		2	
8	N 014 119 1	oval-head screw BM 4 X 20 Z		2	
9	111 971 511	line distributor		1	
10	111 971 921	protection cap for flat connector		4	
		- -- E N D -- -			

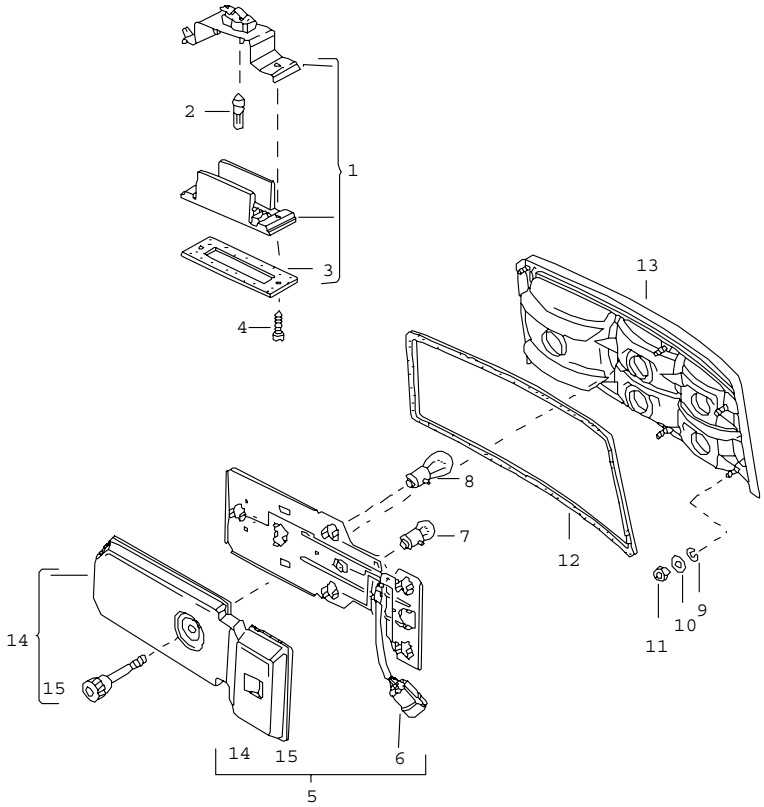

Pos	Part Number	Name	Remarks	Qty	Model
		license plate light rear light			
1	477 943 021 A	license plate light		2	
2	900 631 103 90	bulb HL 12 V, 4 W		2	
3	477 943 131	gasket		2	
4	N 013 961 2	tapping screw B 3,9 X 13		2	
5	477 945 113	bulb holder rear light	/L	1	
(5)	477 945 114	bulb holder rear light	/R	1	
6	803 971 980	connector 7-pole		2	
7	900 631 104 90	bulb C 12, 5W		2	
8	900 631 127 90	bulb RL 12V, 21W		7	
9	N 012 005 3	lock ring B 5		12	
10	N 012 225 1	spring washer B 5		12	
11	N 011 005 14	hexagon nut M 5		12	
-	000 043 172 00	sealing cord $ 9 MM roller 10 M		*	
12	-	1070 MM		2	
13	477 945 205	housing	/L	1	
(13)	477 945 206	housing	/R	1	
(13)	477 945 215	housing with rear foglamp	/L	1	
(13)	477 945 216	housing with rear foglamp	/R	1	
14	477 945 285	cap		2	
15	477 945 285	cap		2	

Pos	Part Number	Name	Remarks	Qty	Model	Pos	Part Number	Name	Remarks	Qty	Model
		- -- E N D -- -									

Model	Year	MG	SG	Illustration	Restrictions	Update	13:03	06.04.2005	PORSCHE PET PORSCHE
924	85	9	05	905-20		187			

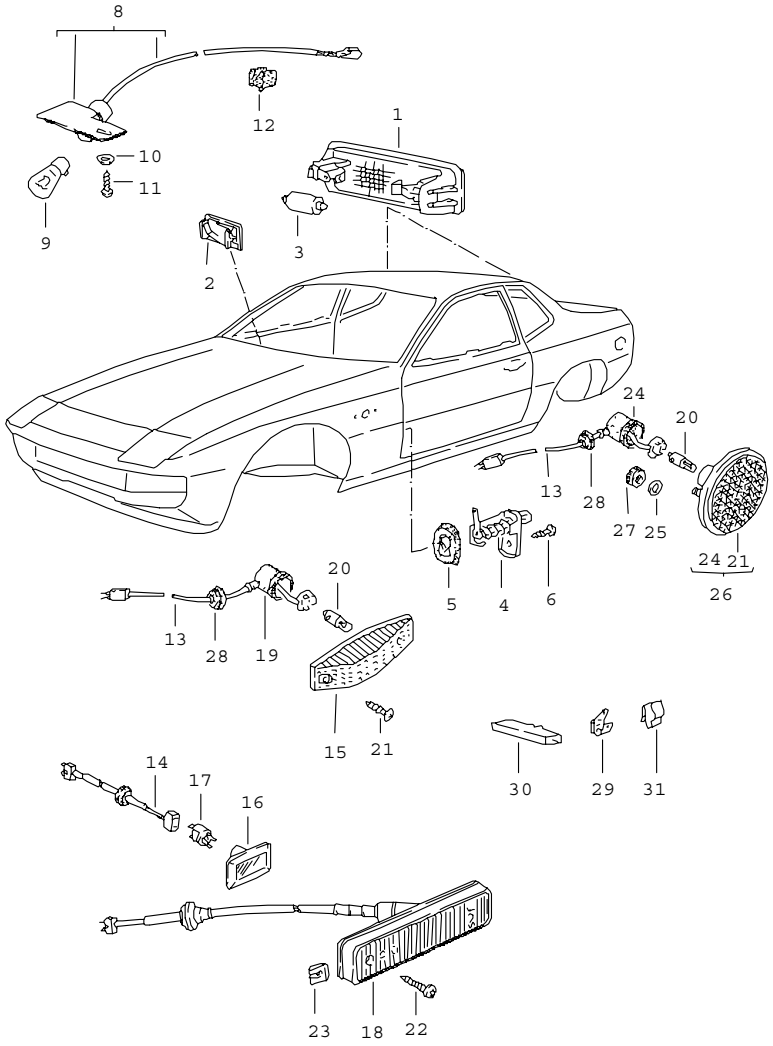

Pos	Part Number	Name	Remarks	Qty	Model
		interior light side turn signal			
1	823 947 105 B	interior light luggage boot lamp		2	
2	171 947 311	glove compartment light		1	
3	900 631 106 90	linolite lamp K 12V, 10W		2	
(3)	999 631 018 90	bulb M 12V, 3W		1	
4	968 613 601 00	contact switch		2	
5	944 613 114 00	gasket		2	
6	N 013 957 5	tapping screw BZ 3,5 X 9,5		2	
8	477 947 601 A	engine compartment lamp		1	
9	900 631 115 90	bulb G 12V, 10W		1	
10	900 151 028 02	washer 4,3		1	
11	900 143 031 02	oval-head sheetmetal screw B 4,2 X 9,5		1	
12	477 947 633	clip		3	
13	477 949 111	bulb holder	-80	2	M 046
14	161 949 111	bulb holder	81-	2	924/TURBO
15	E 321 949 117	side turn signal yellow	-80	2	M 046
16	4A0 949 101	side turn signal yellow	81-	2	924/TURBO
17	477 971 193	harness for side turn signal	81-	2	924,TURBO
18	937 631 410 00	side turn signal yellow		2	GT
19	321 945 139	gasket for side turn signal	-80	2	M 046
20	900 631 103 90	bulb HL 12V, 4W		6	

Pos	Part Number	Name	Remarks	Qty	Model
(20)	999 631 032 90	bulb W 10/5 12V 5W	81-	2	924,TURBO
21	N 013 964 4	tapping screw B 4,2 X 16	-80	4	M 046
22	900 143 178 07	oval-head sheetmetal screw B 3,9 X 22		2	GT
23	E N 045 425 1	speed nut B 3,9		2	GT
28	E 311 971 913	grommet		6	
29	111 971 511	line distributor		2	
30	111 971 977	plug with guide single pole		2	
		- -- E N D -- -			

Pos	Part Number	Name	Remarks	Qty	Model

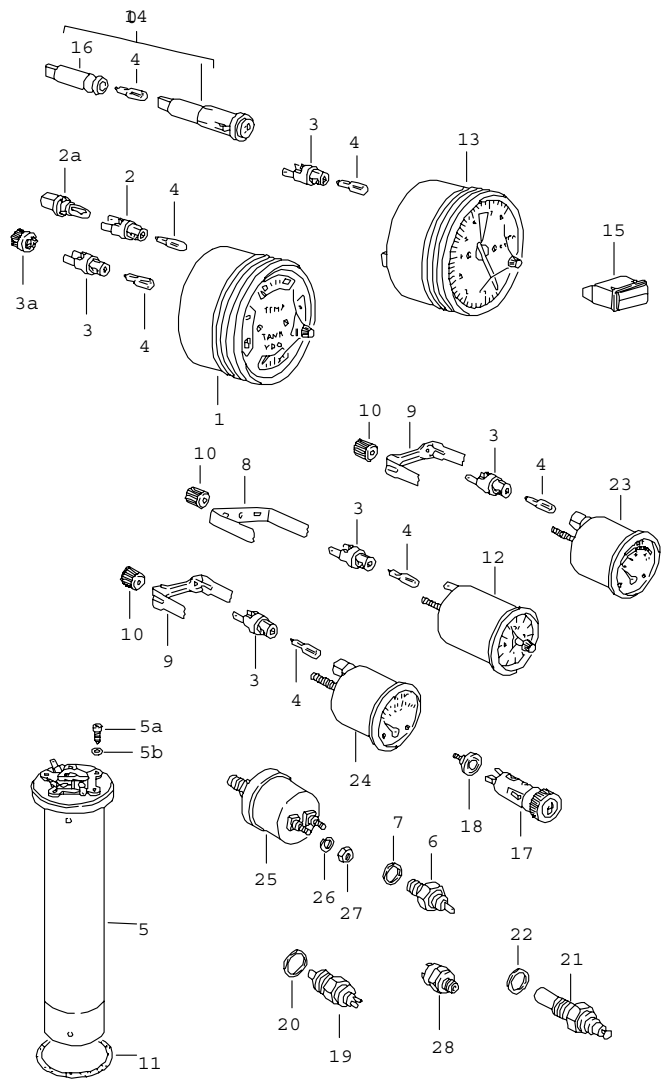

Pos	Part Number	Name	Remarks	Qty	Model
		instruments			
1	477 919 033 B	instrument cluster		1	924
(1)	477 919 033 C	instrument cluster	-80	1	TURBO
(1)	477 919 033 D	instrument cluster	81-	1	TURBO/GT
2	914 631 179 10	bulb holder 2-pole		5	
2A	999 631 301 90	bulb		7	
3	999 632 017 02	bulb holder single pole		6	
3A	928 641 927 00	bulb holder generator		1	
(3)	477 919 213	bulb holder clock		1	
4	900 631 132 90	bulb W 12 V 1,2 W		X	
4A	900 631 019 90	bulb 12 V-3 W		1	
5	477 919 051 B	tank gauge		1	
5	477 919 051 B	tank gauge	-80	1	TURBO
(5)	937 641 031 00	tank gauge	81-	1	TURBO,GT
5A	N 044 734 1	pan-head screw M 5 X 16		5	
5B	N 013 802 1	sealing ring A 5 X 9		5	
6	021 919 081 B	oil pressure switch		1	
7	N 013 808 3	sealing ring		1	
8	E 477 919 115	holder for clock		1	
9	321 919 115 C	holder 42 MM for oil pressure gauge voltmeter		2	
10	411 957 117	knurled nut M 4		5	
11	477 919 133	sealing ring		1	
12	477 919 211	clock		1	924

Pos	Part Number	Name	Remarks	Qty	Model
12	477 919 211	clock	81-	1	TURBO,GT
(12)	477 919 211 A	clock	-80	1	TURBO
13	477 919 205 G	tachometer	-80	1	924
(13)	477 919 205 D	tachometer	-80	1	TURBO
13	477 919 205 G	tachometer		1	924
(13)	477 919 205 H	tachometer	81	1	TURBO,GT
(13)	477 919 205 H	tachometer	82-	1	TURBO
14	477 919 209	indicator light high beam	-80	1	(GB)
(14)	477 919 210 A	indicator light	81-	1	(GB)
(15)	113 919 232 D	indicator light	-80	1	
(15)	171 919 235	combination warning light	81-	1	
(15)	E 911 632 013 05	indicator light	/RL -80	1	
(15)	171 919 235 Q	combination warning light	/RL 81	1	
(15)	171 919 235 Q	combination warning light	/RL 82-	1	
(15)	477 919 235	combination warning light		1	M 215
16	111 919 243	bulb holder		1	
17	477 919 305	cigarette lighter	-84	1	
(17)	477 919 307	cigarette lighter	85-	1	
-	N 012 469 1	snap ring for cigarette lighter		1	
18	411 919 317	glower		1	
19	084 941 521	switch back-up light		1	
20	900 123 106 30	sealing ring A 18 X 24		1	
21	047 919 501 A	temperature sensor coolant		1	
22	N 013 806 2	sealing ring		1	
23	477 919 531	voltmeter	-80	1	924
(23)	477 919 531 B	voltmeter	-80	1	TURBO
(23)	477 919 531 D	voltmeter	81-	1	
(24)	477 919 551 E	oil pressure indicator		1	924
(24)	E 477 919 551 C	oil pressure indicator	-80	1	TURBO
25	047 919 561	oil pressure sender		1	
26	N 012 224 3	spring washer A 4		2	
27	N 011 004 6	hexagon nut M 4		1	
28	113 945 515 G	stop light switch 3-pole A 13	-80	2	
(28)	477 945 515	stop light switch		1	
-	481 945 529	nut M 12 X 1		1	
-	N 011 531 7	washer A 13		1	

- -- E N D -- -

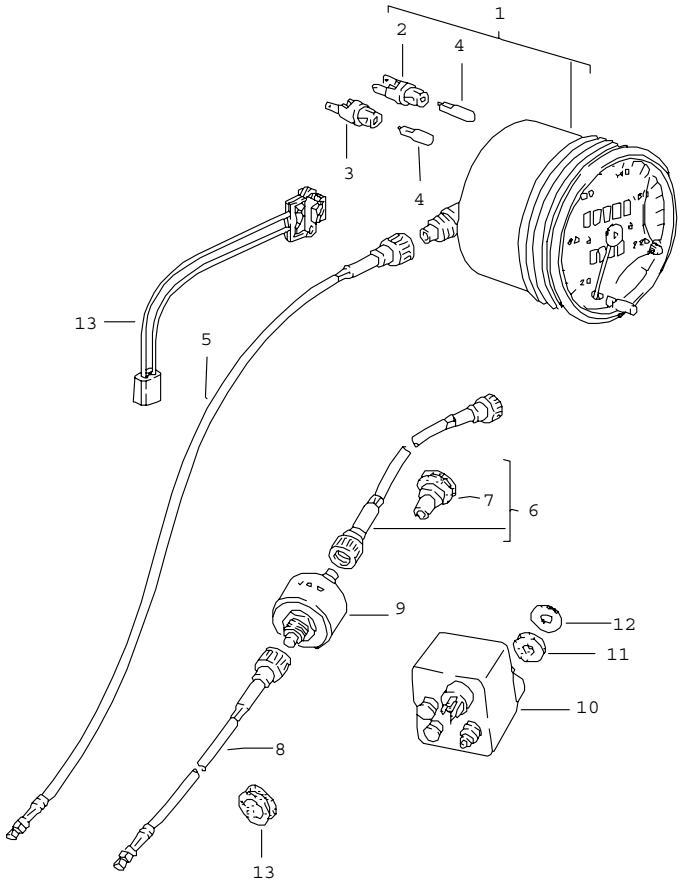

Pos	Part Number	Name	Remarks	Qty	Model
		speedometer			
1	944 641 021 00	speedometer 240 KM/H		1	924
(1)	477 957 031 C	speedometer 260 KM/H	-80	1	TURBO
1	944 641 029 00	speedometer 260 KM/H	81-	1	TURBO,GT
1	944 641 025 00	speedometer 170 MPH/260 KM/H	/RL	1	924
(1)	477 957 031 G	speedometer 170 MPH/260 KM/H	/RL -80	1	TURBO
1	944 641 035 00	speedometer 170 MPH/260 KM/H	/RL 81-	1	TURBO
2	914 631 179 10	bulb holder 2-pole		1	
3	999 632 017 02	bulb holder single pole		2	
4	900 631 132 90	bulb W 12 V, 1,2 W		3	
5	142 957 801 C	drive shaft	/LL	1	
(5)	211 957 801 E	drive shaft	/RL	1	
(6)	477 957 819	drive shaft		1	(SA)
7	477 957 861	rubber sleeve	/LL	1	
(7)	477 823 591	grommet	/RL	1	
(8)	111 957 801 J	drive shaft		1	(SA)
9	944 641 237 00	switch speed warning device		1	(SA)
-	900 116 003 02	circlip		1	
-	321 951 307	buzzer		1	(SA)
13	113 957 855	rubber sleeve		1	
13	944 641 251 00	hall sender		1	
		- -- E N D -- -			

Model	Year	MG	SG	Illustration	Restrictions	Update	13:04	06.04.2005	PORSCHE PET PORSCHE
924	85	9	09	909-00		187			

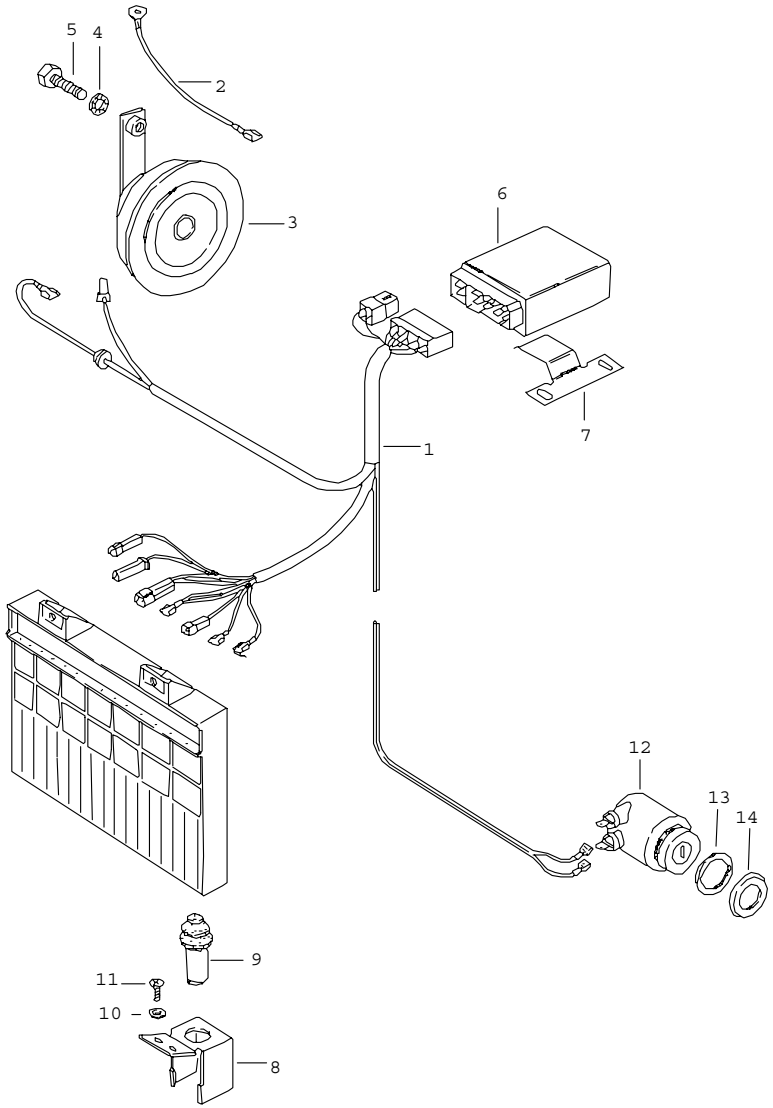

Pos	Part Number	Name	Remarks	Qty	Model
		alarm system			M 533
1	477 971 163	wiring harness		1	
2	E 477 971 325	single line		1	
3	944 637 103 01	horn		1	
4	999 523 102 02	lock washer J 8,4		1	
5	900 075 087 02	hexagon-head bolt M 8 X 15		1	
6	911 637 104 00	control unit		1	
6	911 637 104 01	control unit		1	(CH)
7	477 857 069	support		1	
8	477 805 713	support		1	
9	928 613 173 00	contact switch		1	
-	477 971 837	connector housing for contact switch		1	
10	N 011 521 3	washer A 3,7		2	
11	N 013 957 5	tapping screw 3,5 X 9,5		2	
12	911 637 101 00	alarm switch with key		1	
13	477 951 255	washer		1	
14	477 951 251	rose		1	
		- -- E N D -- -			

Model	Year	MG	SG	Illustration	Restrictions	Update	13:04	06.04.2005	PORSCHE PET PORSCHE
924	85	9	10	910-00		187			

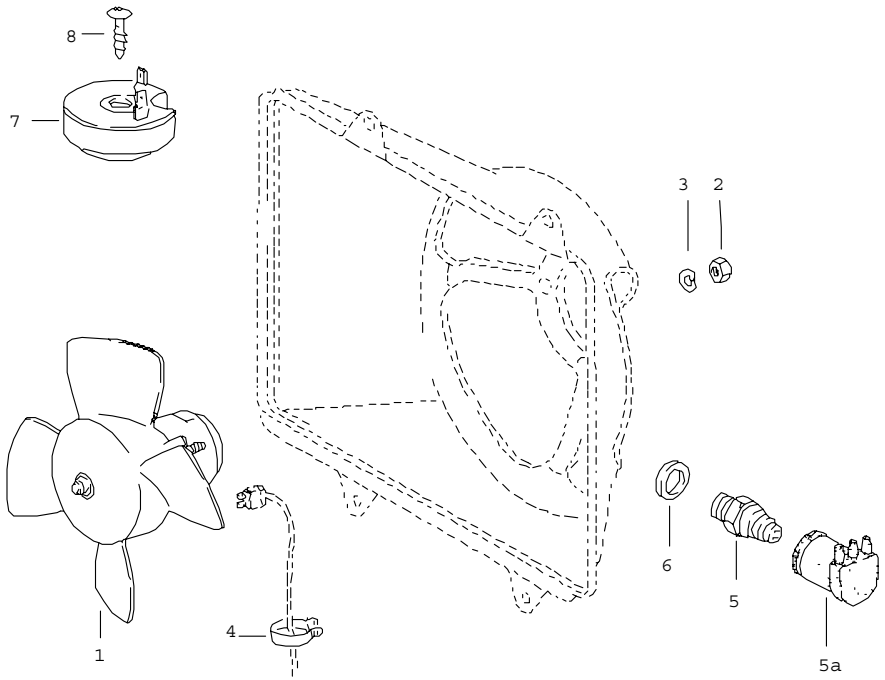

Pos	Part Number	Name	Remarks	Qty	Model
		electric fan			
1	477 959 455 C	electric fan		1	
(1)	823 959 455 F	electric fan		1	M 573
2	900 076 010 02	hexagon nut M 6		3	
3	N 011 524 7	washer A 6,4		3	
4	999 651 168 40	cable holder		1	
5	823 959 481 F	switch		1	
5A	477 971 934	protection cap		1	
6	900 123 118 30	sealing ring A 22 X 27		1	
7	477 905 053	series resistor		1	
(7)	477 905 052	series resistor		1	M 573
8	N 013 964 4	tapping screw B 4,2 X 16		1	
		- -- E N D -- -			

Model	Year	MG	SG	Illustration	Restrictions	Update		
924	85	9	98	REP		187	9:49	12.04.2005

Pos	Part Number	Name	Remarks	Qty	Model
		installation set repair kits			
>>	> 477 955 997 B	installation set headlight washer system comprising:		1	
-	191 955 681	pump		1	
-	431 955 465 A	gasket		1	
-	N 020 126 1	pipe 12,5 X 1,25 410 MM 890 MM 100 MM		X 1 1 1	
-	113 955 975 B	t-piece		1	
-	477 955 183	pressure control valve		2	
-	477 955 177	jet carrier		2	
-	N 019 121 1	nut MPG 11		2	
-	928 618 111 00	relay		1	
-	135 937 501 A	terminal sleeve housing		1	
-	825 971 990	terminal sleeve housing		1	
-	111 937 077 E	line distributor		1	
-	477 971 827 B	cable connection		1	
-	477 971 205	wiring harness		1	
-	477 971 322 A	double line		1	
-	477 955 702	switch		1	
>>	> 477 955 995	installation set rear window wiper comprising:		1	TURBO,GT
-	477 955 713 A	wiper motor		1	
-	477 955 715 B	plate		1	
-	N 012 226 5	spring washer B 6		3	
-	900 076 010 02	hexagon nut M 6		3	
-	477 955 737	cap		1	
-	477 955 439	grommet		2	
-	477 955 437	washer		1	

Model	Year	MG	SG	Illustration	Restrictions	Update		
924	85	9	98	REP		187	9:49	12.04.2005

Pos	Part Number	Name	Remarks	Qty	Model
-	311 955 243 A	hexagon nut M 12 X 1		1	
-	211 955 275 A	cap		1	
-	477 955 409 A	wiper arm		1	
-	E 999 084 045 02	lock nut		1	
-	928 628 218 01	wiper blade		1	
-	477 971 345	harness engine rear window wiper		1	
-	477 971 346	wiring harness rocker switch rear window wiper		1	
-	477 955 701	rocker switch		1	
-	111 941 189	drain bush		1	
-	999 652 106 02	flat receptacle 6,3 X 1		3	
-	N 018 007 4	insulating hose 100 MM		1	
>>	> 477 941 903 A	installation set fog headlamp white comprising:		1	
-	477 941 703 B	fog headlamp		2	
-	900 631 126 90	halogen bulb YC 12 V - 55 W		2	
-	N 011 010 6	hexagon nut M 10		2	
-	900 027 016 02	lock ring B 10		2	
-	900 025 008 02	washer A 10,5		2	
-	E 131 867 549	clamp		2	
-	477 941 535	switch		1	
-	E 141 957 397 A	bulb holder		1	
-	900 631 132 90	bulb W 12 V - 1,2 W		1	
-	477 963 137	relay		1	
-	477 971 490 A	harness		1	

Model	Year	MG	SG	Illustration	Restrictions	Update		
924	85	9	98	REP		187	9:49	12.04.2005

Pos	Part Number	Name	Remarks	Qty	Model
-	477 971 491 A	harness		1	
-	477 971 827 B	cable connection		1	
>>	> 477 941 904 A	installation set fog headlamp yellow comprising:		1	(F)
-	477 941 703 A	fog headlamp		2	(F)
-	900 631 126 90	halogen bulb YC 12 V - 55 W		2	
-	N 011 010 6	hexagon nut M 10		2	
-	900 027 016 02	lock ring B 10		2	
-	900 025 008 02	washer A 10,5		2	
-	E 131 867 549	clamp		2	
-	477 941 535	switch		1	
-	E 141 957 397 A	bulb holder		1	
-	900 631 132 90	bulb W 12 V - 1,2 W		1	
-	477 963 137	relay		1	
-	477 971 490 A	harness		1	
-	477 971 491 A	harness		1	
-	477 971 827 B	cable connection		1	
-	911 631 964 00	light-diffusing lens FARBLOS		2	
-	911 631 963 00	light-diffusing lens yellow		2	(F)
-	911 631 956 00	gasket for light-diffusing lens		2	
-	E 911 631 959 28	ring for fog headlamp		2	
		- -- E N D -- -			

M000	! SUMMARY OF OPTIONAL EXTRAS "M"!
M020	SPEEDOMETER WITH TWO SCALES MPH-KM/H
M026	WITH ACTIVATED CHARCOAL CANISTER
M036	IMPACT ABSORBERS
M036	FRONT AND REAR
M046	SIDE TURN SIGNALS
M058	IMPACT ABSORBERS FRONT AND REAR
M062	VERSION FOR SWEDEN
M124	VERSION FOR FRANCE
M157	ENGINE 85 KW (115 DIN-HP) WITH EXHAUST GAS
M157	RECIRCULATION, CATALYTIC CONVERTER AND ACTIVATED
M157	CARBON CONTAINER - VALID FROM FEBRUARY 77 -
M186	SEAT BELT FOR BACK SEATS
M190	INCREASED SIDE DOOR STRENGTH
M193	VERSION FOR JAPAN
M215	VERSION FOR SAUDI ARABIA
M220	LOCKING DIFFERENTIAL 40 %
M249	AUTOMATIC TRANSMISSION
M288	HEADLAMP WASHER
M308	PNEUMATIC SPRING FOR ENGINE HOOD
M402	924 - ANNIVERSARY CAR '82
M402	50 YEARS PORSCHE-CONSTRUCTIONS
M402	LACQUER: ZINNMETALLIC
M402	INTERIOR EQUIPMENT: BLACK
M404	STABILIZER, FRONT AND REAR
M409	SPORT SEATS
M425	REAR WINDOW WIPER
M426	SPECIAL MODEL "LE MANS" '81
M449	SPECIAL MODEL FOR SWITZERLAND
M449	LACQUER: ALPINE-WHITE
M449	INTERIOR EQUIPMENT: BLACK
M471	EQUIPMENT GROUP 1, SPORTING
M471	924:
M471	TURBO-CHASSIS (VENTILATED BRAKE DISC, STABILIZERS,
M471	SHOCK ABSORBERS (KONI), CAST SPOKED WHEELS -
M471	5 HOLES 5 1/2 J X 15) THREE-SPOKE-STEERING WHEEL
M471	(LEATHER), REAR SPOILER
M471	TURBO:
M471	USA, CANADA, JAPAN -80
M471	VENTILATED BRAKE DISC, STABILIZERS,
M471	SHOCK ABSORBERS (KONI), FORGED WHEELS - 5 HOLES
M471	6 J X 16
M472	TURBO: USA, CANADA, JAPAN -80
M472	WITH CHASSIS OF STANDARD MODEL
M479	VERSION FOR AUSTRALIA
M483	DEFERRING ENGINE PARTS FOR RIGHT HAND DRIVE
M492	FOR LEFT-HAND TRAFFIC
M533	ANTI-THEFT DEVICE
M553	VERSION FOR USA, CANADA
M560	DETACHABLE ROOF
M573	AIR CONDITIONER

M592	BRAKE FLUID LEVEL INDICATOR
M651	ELECTRIC WINDOW OPENER

TR203

THIS PARTS CATALOGUE CONTAINS ALL ORDER INFORMATION OF
TYPE 924 FROM MODEL YEAR 1980 TO MODEL YEAR 1985

IT IS AVAILABLE IN TWO EDITIONS IN THE FOLLOWING LANGUAGES:

EDITION
USA, CANADA - *

EDITION
ALL OTHER COUNTRIES - GERMAN

* - ENGLISH

- FRENCH

- ITALIAN

- SPANISH

UPDATING IS BEING PERFORMED BY CHANGING OF UPDATE.

THE EDITION CAN BE RECOGNIZED BY THE CURRENT NO.
YEAR IN THE BOTTOM LINE OF SUBJECT UPDATE.

THE PREVIOUS UPDATE SHOULD NO LONGER BE USED.

ALL ILLUSTRATIONS ARE SUBJECT TO CHANGE WITHOUT OBLIGATION.

"WE RESERVE THE RIGHT TO SUPPLY A SUBSEQUENTLY
PRODUCED COMPONENT, ON WHICH ADDITIONAL WORK
IS NECESSARY, INSTEAD OF THE COMPONENT LISTED IN
THE CATALOGUE"

Model	Year	MG	SG	Illustration	VIN No.	Update		
924	85	9	10	910		187	13:04	06.04.2005

```
TR006
    EXPLANATION OF THE ABRIDGED VERSION OF THE VEHICLE IDENT. NUMBERS (VIN)
    ======================================================================
    USED IN THE CATALOGUE
    =====================

     DIGIT:                1 2 3  4 5 6  7 8  9  10  11  12  13 14 15 16 17

     EXAMPLE:              W P O  Z Z Z  9 2  Z   F   N   4   0  0  1  2  5
                                         ===       =   =   =   =============
                                          !        !   !   !          !
VEHICLE TYPE 1ST+2ND DIGIT----------------+        !   !   !          !
                                                   !   !   !          !
MODEL YEAR----------------------------------------+   !   !          !
                                                       !   !          !
MANUFACTURING LOCATION-------------------------------+   !          !
                                                           !          !
VEHICLE TYPE 3RD DIGIT-------------------------------------+          !
                                                                      !
SERIAL NUMBER---------------------------------------------------------+
```

Model	Year	MG	SG	Illustration	VIN No.	Update		
924	85	9	10	910		187	13:04	06.04.2005

FR205

VEHICLE TYPE	MY	VIN	ENGINE TYPE	
924	80 A	92A04 10001>19999	047.8/9	92 KW
924 TURBO	80 A	93A01 40001>49999	M31.01	125 KW
924 (USA)(CDN)(J)	80 A	92A04 30001>39999	047.E/F	85 KW
924 TURBO (USA)(CDN)(J)	80 A	93A01 50001>59999	M31.02	110 KW
924	81 B	92BN4 00001>09999	047.8/9	92 KW
924 TURBO	81 B	93BN1 00001>09999	M31.03	130 KW
924 CARRERA GT	81 B	93BN7 00001>09999	M31.50	154 KW
924 (USA)(CDN)(J)	81 B	92BN4 50001>59999	047.E/F	85 KW
924 TURBO (USA)(CDN)(J)	81 B	93BN1 50001>59999	M31.04	115 KW
924	82 C	92CN4 00001>09999	047.8/9	92 KW
924 TURBO	82 C	93CN1 00001>09999	M31.03	130 KW
924 (USA)(CDN)	82 C	92CN4 50001>59999	047.E/F	85 KW
924 TURBO (USA)(CDN)	82 C	93CN1 50001>59999	M31.04	115 KW
924 (J)	82 C	92CN4 00001>09999	047.E/F	85 KW
924 TURBO (J)	82 C	93CN1 00001>09999	M31.04	115 KW
924	83 D	92DN4 00001>09999	047.8/9	92 KW
924 TURBO (I)	83 D	93DN1 00001>09999	M31.03	130 KW
924	84 E	92EN4 00001>09999	047.8/9	92 KW
924 TURBO	84 E	93EN1 00001>09999	M31.03	130 KW
924	85 F	92FN4 00001>09999	047.8/9	92 KW

T

```
EXPLANATION OF THE MOTOR-NUMBERS USED IN THE CATALOGUE
======================================================

DIGIT:                                          1 2   3 4 5 6 7 8

EXAMPLE:                                        X J   0 0 2 1 3 6
                                                ===   ===========
                                                 !         !
ENGINE TYPE--------------------------------------+         !
                                                          !
SERIAL NUMBER-----------------------------------------------+

TURBO
=====

DIGIT:                                          1 2 3 4   5 6 7 8

EXAMPLE:                                        3 1 0 4   0 4 3 5
                                                =======   =======
                                                   !         !
ENGINE TYPE----------------------------------------+         !
                                                            !
SERIAL NUMBER-------------------------------------------------+
```

Model	Year	MG	SG	Illustration	VIN No.	Update	13:08	06.04.2005
924	85	9	10	910		187		

MR205

VEHICLE TYPE	ENGINE TYPE	MY	ENGINE-NUMBER	TECHNICAL DATA
924	047.8	80 A	XK.....	4ZYL/2,0L/ 92KW
924	047.8	80 A	XJ.....	4ZYL/2,0L/ 92KW
924 M249	047.9	80 A	XK.....	4ZYL/2,0L/ 92KW
924 M249	047.9	80 A	XJ.....	4ZYL/2,0L/ 92KW
924 TURBO	M31.01	80 A	00001>09999	4ZYL/2,0L/125KW
924 (USA)(CDN)(J)	047E	80 A	VC.....	4ZYL/2,0L/ 85KW
924 M249 (USA)(CDN)(J)	047F	80 A	VC.....	4ZYL/2,0L/ 85KW
924 TURBO (USA)(CDN)(J)	M31.02	80 A	00001>09999	4ZYL/2,0L/110KW
924	047.8	81 B	XK.....	4ZYL/2,0L/ 92KW
924	047.8	81 B	XJ.....	4ZYL/2,0L/ 92KW
924 M249	047.9	81 B	XK.....	4ZYL/2,0L/ 92KW
924 M249	047.9	81 B	XJ.....	4ZYL/2,0L/ 92KW
924 TURBO	M31.03	81 B	00001>09999	4ZYL/2,0L/130KW
924 CARRERA GT	M31.50	81 B	00001>09999	4ZYL/2,0L/154KW
924 (USA)(CDN)(J)	047.E	81 B	VC.....	4ZYL/2,0L/ 85KW
924 M249 (USA)(CDN)(J)	047.F	81 B	VC.....	4ZYL/2,0L/ 85KW
924 TURBO (USA)(CDN)(J)	M31.04	81 B	00001>09999	4ZYL/2,0L/115KW
924	047.8	82 C	XK.....	4ZYL/2,0L/ 92KW
924	047.8	82 C	XJ.....	4ZYL/2,0L/ 92KW
924 M249	047.9	82 C	XK.....	4ZYL/2,0L/ 92KW
924 M249	047.9	82 C	XJ.....	4ZYL/2,0L/ 92KW
924 TURBO	M31.03	82 C	00001>09999	4ZYL/2,0L/130KW
924 (USA)(CDN)(J)	047.E	82 C	VC.....	4ZYL/2,0L/ 85KW
924 (USA)(CDN)(J)	047.F	82 C	VC.....	4ZYL/2,0L/ 85KW
924 TURBO (USA)(CDN)(J)	M31.04	82 C	00001>09999	4ZYL/2,0L/115KW
924	047.8	83 D	XK.....	4ZYL/2,0L/ 92KW
924	047.8	83 D	XJ.....	4ZYL/2,0L/ 92KW
924 M249	047.9	83 D	XJ.....	4ZYL/2,0L/ 92KW
924 TURBO (I)	M31.03	83 D	00001>09999	4ZYL/2,0L/130KW
924	047.8	84 E	XK.....	4ZYL/2,0L/ 92KW
924	047.8	84 E	XJ.....	4ZYL/2,0L/ 92KW
924 M249	047.9	84 E	XJ.....	4ZYL/2,0L/ 92KW
924 TURBO (I)	M31.03	84 E	00001>09999	4ZYL/2,0L/130KW
924	047.8	85 F	XK.....	4ZYL/2,0L/ 92KW
924	047.8	85 F	XJ.....	4ZYL/2,0L/ 92KW
924 M249	047.9	85 F	XJ.....	4ZYL/2,0L/ 92KW

TR205

```
      EXPLANATION OF THE TRANSMISSION-NUMBERS USED IN THE CATALOGUE
      =============================================================


      DIGIT:                                      1 2   3 4   5 6   7

      EXAMPLE:                                    M D   1 9   0 2   5
                                                  ===   ===   ===   =
                                                   !     !     !    !
                                                   !     !     !    !
      IDENTIFICATION LETTER----------------------+     !     !    !
                                                       !     !    !
      MANUFACTURING DAY--------------------------------+     !    !
                                                             !    !
      MANUFACTURING MONTH------------------------------------+    !
                                                                  !
      MANUFACTURING YEAR-------------------------------------------+


      G31.01/02/03
      ============

      DIGIT:                                       1 2 3 4   5 6 7 8 9  (10 11)

      EXAMPLE:                                     3 1 0 3   0 1 2 9 1  ( 1 2 )
                                                   =======   =========  =======
                                                      !         !          !
      TRANSMISSION VERSION--------------------------+         !          !
                                                              !          !
      SERIAL NUMBER-------------------------------------------+          !
                                                                         !
      LIMITED SLIP DIFFERENTIAL------------------------------------------+
```

Model	Year	MG	SG	Illustration	VIN No.	Update		
924	85	9	10	910		187	13:08	06.04.2005

GR203

VEHICLE TYPE	TRANSM. TYPE	MY	TRANSMISSION NO.	TECHNICAL DATA
924	016.8	80 A	VQ.....	5-SPEED
924 M249	087.3	80 A	RK.....	3-SPEED
924 TURBO	G31.01	80 A	00001>99999	5-SPEED
924 (USA)(CDN)	016.9	80 A	UV.....	5-SPEED
924 M249 (USA)(CDN)	087.6	80 A	RL.....	3-SPEED
924 TURBO (USA)(CDN)	G31.02	80 A	00001>99999	5-SPEED
924 (J)	016.9	80 A	VR.....	5-SPEED
924 M249 (J)	087.6	80 A	RL.....	3-SPEED
924 TURBO (J)	G31.02	80 A	00001>99999	5-SPEED
924	016.8	81 B	MD.....	5-SPEED
924	087.3	81 B	RK.....	3-SPEED
924 TURBO	G31.01	81 B	00001>99999	5-SPEED
924 CARRERA GT	G31.03	81 B	00001>99999	5-SPEED
924 (USA)(CDN)	016.9	81 B	MF.....	5-SPEED
924 M249 (USA)(CDN)	087.6	81 B	RL.....	5-SPEED
924 TURBO (USA)(CDN)	016.G	81 B	MB.....	5-SPEED
924 (J)	016.9	81 B	ME.....	5-SPEED
924 M249 (J)	087.6	81 B	RL.....	5-SPEED
924 TURBO (J)	016.G	81 B	MX.....	5-SPEED
924	016.8	82 C	MD.....	5-SPEED
924 M220	016.8	82 C	4Q.....	5-SPEED
924 M249	087.3	82 C	RK.....	3-SPEED
924 TURBO	G31.01	82 C	00001>99999	5-SPEED
924 TURBO M220	G31.01	82 C	00001>99999(12)	5-SPEED
924 (USA)(CDN)	016.9	82 C	MF.....	5-SPEED
924 M220 (USA)(CDN)	016.9	82 C	5Q.....	5-SPEED
924 M249 (USA)(CDN)	087.6	82 C	RL.....	3-SPEED
924 TURBO (USA)(CDN)	016.G	82 C	MB.....	5-SPEED
924 TURBO M220 (USA)(CDN)	016.G	82 C	6Q.....	5-SPEED
924 (J)	016.9	82 C	ME.....	5-SPEED
924 M220 (J)	016.9	82 C	5Q.....	5-SPEED
924 M249 (J)	087.6	82 C	RL.....	3-SPEED
924 TURBO (J)	016.G	82 C	MX.....	5-SPEED
924 TURBO M220 (J)	016.G	82 C	6Q.....	5-SPEED
924	016.9	83 D	MD.....	5-SPEED
924 M220	016.8	83 D	4Q.....	5-SPEED
924 M249	087.3	83 D	RCC.....	3-SPEED
924 TURBO (I)	G31.01	83 D	00001>99999	5-SPEED
924 TURBO M220 (I)	G31.01	83 D	00001>99999(12)	5-SPEED
924	016.8	84 E	MD.....	5-SPEED
924 M220	016.8	84 E	4Q.....	5-SPEED
924 M249	087.3	84 E	RCC.....	3-SPEED
924 TURBO (I)	G31.01	84 E	00001>99999	5-SPEED
924 TURBO M220 (I)	G31.01	84 E	00001>99999(12)	5-SPEED
924	016.8	85 F	MD.....	5-SPEED
924 M220	016.8	85 F	4Q.....	5-SPEED
924 M249	087.3	85 F	RCC.....	3-SPEED

TR201

LEGENDS AND NOTICES

IN COLUMN -S- STATUS

N	NEW ADDITION
P	PART ALREADY IN PROGRAMME, BUT NEW AT THIS APPLICATION
W	DELETED AT THIS APPLICATION, BUT CONTINUED TO BE CARRIED
A	STOCK TO BE USED UP
U	DELETED WITHOUT REPLACEMENT
*	PART ALSO OR ONLY AVAILABLE IN REPAIR KIT
>	ALSO AVAILABLE IN EXCHANGE

IN COLUMN - ILL. -

1	IDENTIFICATION NO. IN ILLUSTRATION
(1)	PART ONLY SIMILAR AS ILLUSTRATED
-	PART IS NOT ILLUSTRATED

FIG.-NUMBERS FOR WHICH THERE IS SHOWN NO TEXT ARE NOT VALID FOR THIS EDITION OF CATALOGUE

IN COLUMN -PART NUMBER/CODE-

000 000 000 00	PART NUMBER EQUALS ORDERING NO., IF A CODE IS SHOWN, IT WILL HAVE TO BE PART OF ORDERING NUMBER
AC3	COLOUR CODE

IN COLUMN -TEXT

INSTALLATION WIRH ENGINE OR CHASSIS NUMBER-RANGE

		EXAMPLE:
M XJ 001291 >>		FROM ENGINE NO.
F >>	92 FN40 01291	UP TO VIN

TR201

```
                    IN COLUMN  - A -
                    ----------------

                    IDENTIFICATION LETTER FOR PERIOD OF INSTALLATION
                    THAT IS REPEATED SEVERAL TIMES IN THE CATALOG GROUP.

                    EXPLANATION PLEASE FIND IN TEXT COLUMN OF THE CATALOG GROUP


                    IN COLUMN   - QU -   = NO. OF PIECES
                    ------------------------------------

          1         NUMBER PER APPLICATION

          X         NUMBER AS NEEDED

          *         AVAILABLE ONLY IN RUNNING LENGTHS   1 = 1 METRE


                    IN COLUMN   - MODEL/SYMBOL -
                    ----------------------------

        M650        OPTIONAL EQUIPMENT  -  SEE M-NO. LIST

         -85        LIMITATION OF MODEL YEAR FOR INSTANCE: VALID UP TO
                    END OF MODEL YEAR 1985

        /LL         LHD

        /RL         RHD
                    ---------+
        /V          FRONT    I
                             I
        /H          REAR     I
                             I---> APPLIES TO
        /L          LEFT     I     DIRECTION OF TRAVEL
                             I
        /R          RIGHT    I
                    ---------+

       AUT.         AUTOMATIC

        WW          THE PART CAN BE USED INSTEAD OF THE
                    PRECEDING ONE
```

TR206

EQUIPMENT BY COUNTRY REGULATIONS

(A)	AUSTRIA
(AUS)	AUSTRALIA
(B)	BELGIUM
(CDN)	CANADA
(CH)	SWITZERLAND
(D)	FEDERAL REPUBLIC OF GERMANY
(DK)	DENMARK
(E)	SPAIN
(F)	FRANCE
(GB)	GREAT BRITAIN
(GR)	GREECE
(HK)	HONGKONG
(I)	ITALY
(J)	JAPAN
(L)	LUXEMBURG
(N)	NORWAY
(NL)	NETHERLANDS
(NS)	NEW ZEALAND
(P)	PORTUGAL
(RC)	TAIWAN
(S)	SWEDEN
(SA)	SAUDI ARABIA
(SF)	FINLAND
(USA)	UNITED STATES OF AMERICA