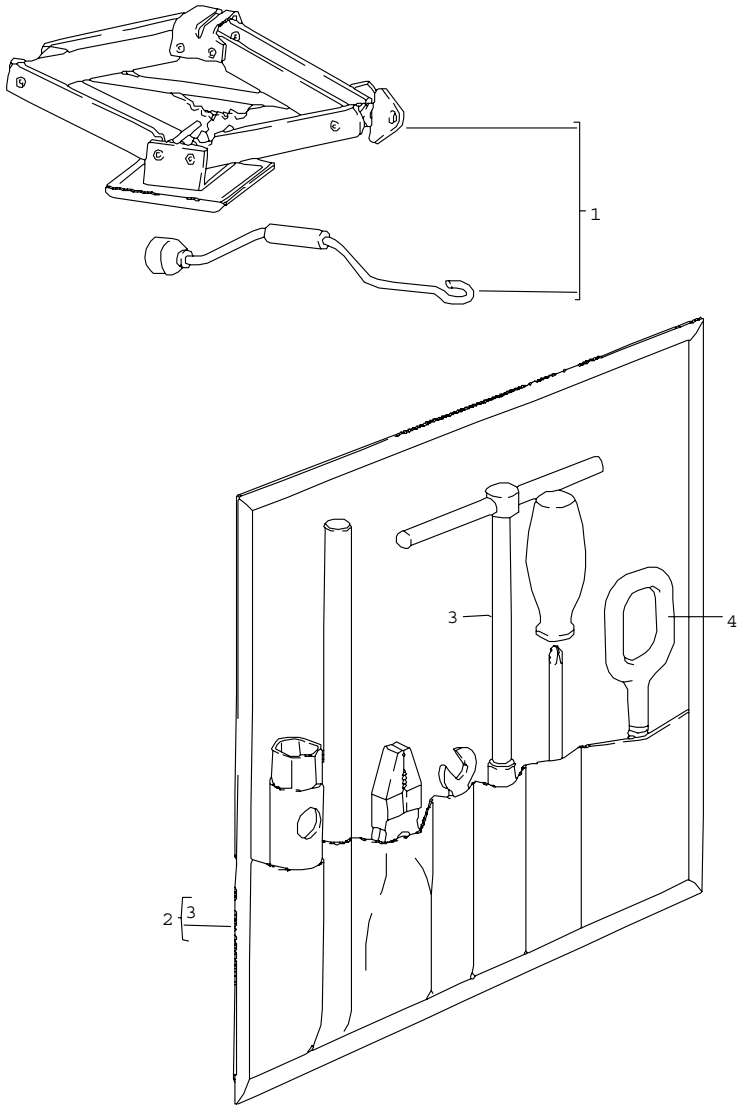

Pos	Part Number	Name	Remarks	Qty	Model
		accessories			
1	477 011 033	scissors type jack		1	
2	944 721 027 05	tool bag with contents comprising:		1	
		tool bag angular screw driver		1	
3	477 012 233	spark plug wrench		1	
		rim wrench		1	
		operating rod for rim wrench		1	
		double-end spanner 10 X 13		1	
		handle		1	
		insert for cross-recess screw and slotted screw		1	
		universal pliers		1	
-	928 361 311 00	hook for cover wheel nut		1	
		use also:			
4	996 721 151 00	towing lug		1	
4	928 722 101 05	towing lug		1	M 058
		- -- E N D -- -			

Model	Year	MG	SG	Illustration	Restrictions	Update		
944	85	0	01	1-05		187	10:16	07.04.2005

Pos	Part Number	Name	Remarks	Qty	Model
		stickers			
-	944 701 179 00	sticker tyre pressure 185/70 - VR 15		1	(AUS)
-	937 701 127 00	sticker tyre pressure 205/55 - VR 16		1	
-	944 701 181 00	sticker tyre pressure		1	(AUS)
-	944 701 193 00	sticker emergency wheel		1	
-	944 006 113 00	sticker engine specifications		1	(S)
-	944 006 119 01	sticker engine specifications	-84	1	(CH)
-	477 000 285	sticker high voltage		1	
		- -- E N D -- -			

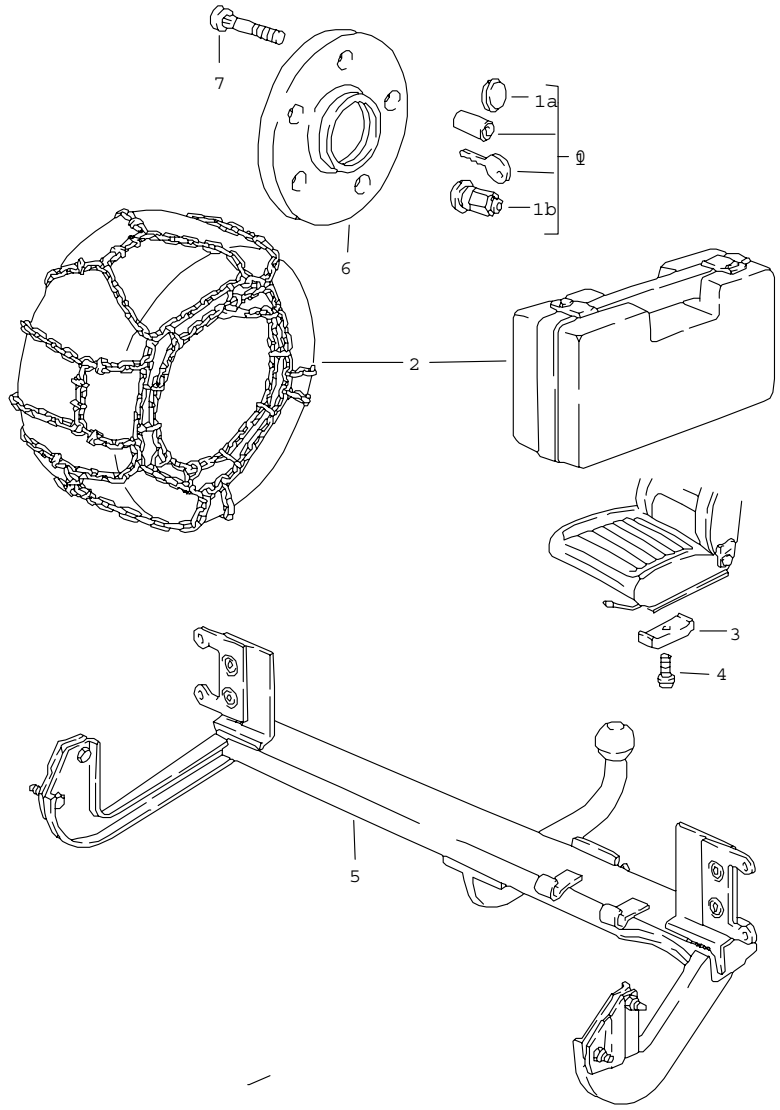

Pos	Part Number	Name	Remarks	Qty	Model
		accessories			
1	928 361 047 01	wheel nut lockable 1 set comprising:		1	
-	928 361 306 01	wheel nut lockable without lock lock		4 4	
1A	928 361 310 00	protection cap		4	
		snow chains			
2	911 361 909 00	snow chains 1 set for tyre 185/70 R 15 205/55 R 16 215/60 R 15		1	
		vertical seat adjustment			
3	911 521 493 00	spacer 13 MM		X	
4	900 067 089 02	pan-head screw M 6 X 25 for 13 MM elevation		X	
(4)	N 014 749 2	pan-head screw M 6 X 40 for 26 MM elevation		X	
		trailer coupling			
5	E 944 722 901 00	trailer coupling with detachable ball-pin complete with electric installation set use also: 944.111.064.00		1 2	

Pos	Part Number	Name	Remarks	Qty	Model
(5)	E 944 722 901 01	trailer coupling with detachable ball-pin complete with electric installation set use also: 944.111.064.00		1 2	M 058
-	928 006 901 00	sticker drawbar load		1	
-	111 919 209 A	indicator light		1	
-	900 631 132 90	bulb 12V, 1,2W		1	
-	431 953 231	relay		1	
		spacer ring			
6	930 331 611 04	spacer ring 28 MM		2	
7	901 331 671 01	wheel bolt 72 MM		10	
		- -- E N D -- -			

Pos	Part Number	Name	Remarks	Qty	Model

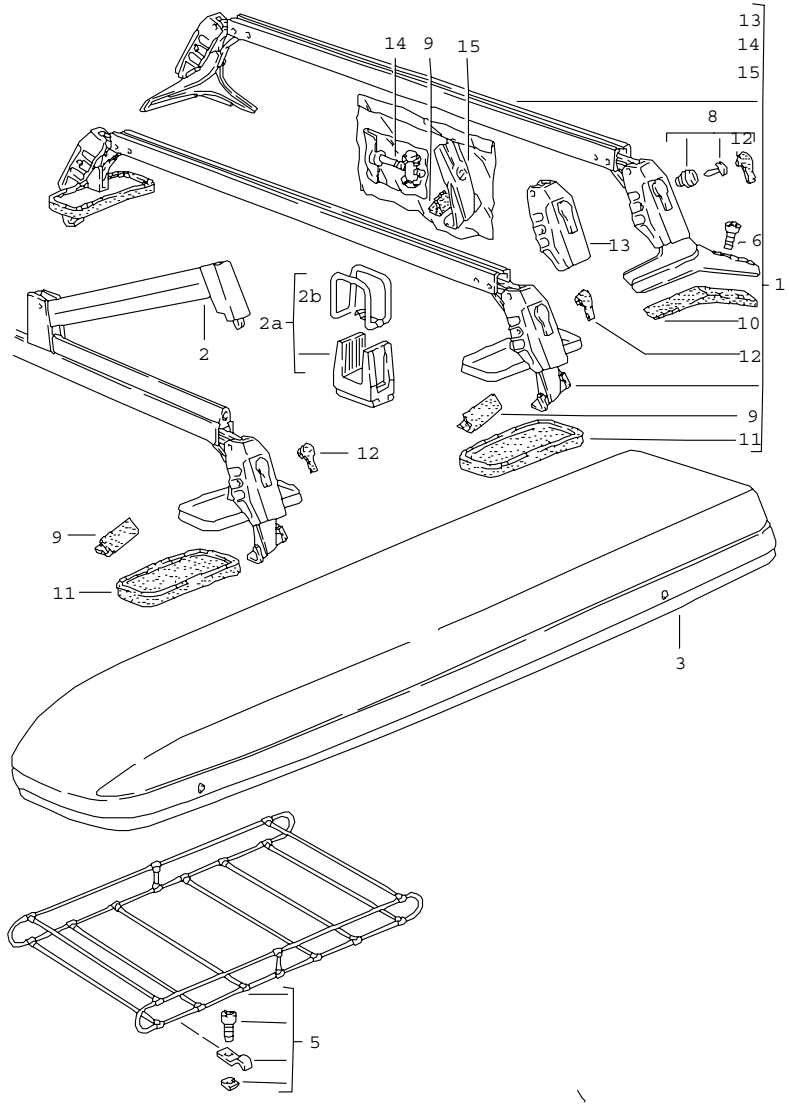

Pos	Part Number	Name	Remarks	Qty	Model
		roof transport system			
1	944 801 005 00	main support 1 set		1	
2	928 801 061 02	clamping bow 1 set		1	
2A	928 801 903 02	rubber support for skis 1 set		1	
2B	928 801 193 02	retaining strap 1 set		1	
3	928 801 063 02	ski box	/L	1	
(3)	928 801 064 02	ski box	/R	1	
5	928 801 081 02	roof rack set		1	
6	999 119 012 07	pan-head screw		4	
8	928 801 011 02	cylinder lock with keys		1	
9	E 477 091 145	protection cap		2	
10	477 091 151 A	protective rubber	/L	1	
(10)	477 091 152 A	protective rubber	/R	1	
11	928 801 267 02	rubber plate front		2	
12	928 801 111 02	protection cap		4	
13	928 801 107 02	cover		2	
14	944 801 901 01	parts kit	/V	1	
15	944 801 901 01	parts kit	/V	1	
		- -- E N D -- -			

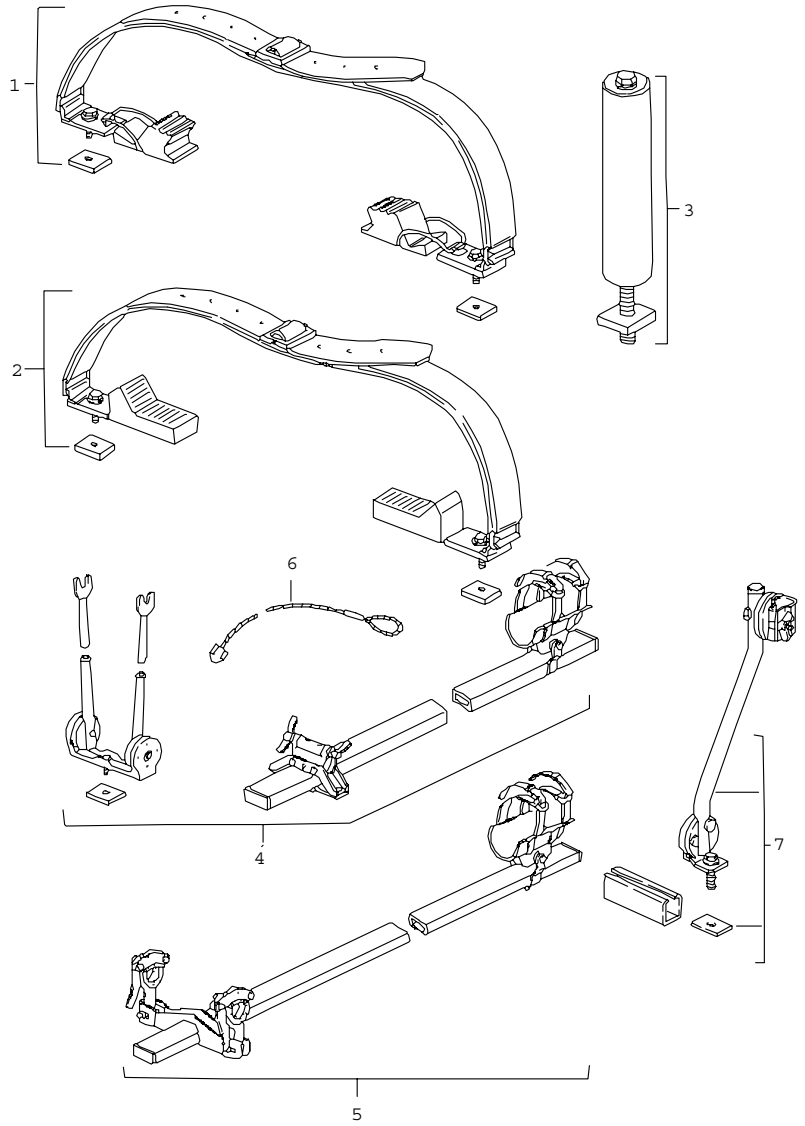

Pos	Part Number	Name	Remarks	Qty	Model
		roof transport system			
1	928 801 019 02	set of surf board supports		1	
2	928 801 017 02	set - canoe carrier		1	
3	928 801 085 02	ladder support mandrel		X	
4	928 801 093 02	set - bike carrier racing bike		1	
5	928 801 095 02	set - bike carrier standard bike		1	
6	928 801 079 02	safety rope for anti-theft protection		1	
7	928 801 097 02	support for bicycle		1	
		- -- E N D -- -			

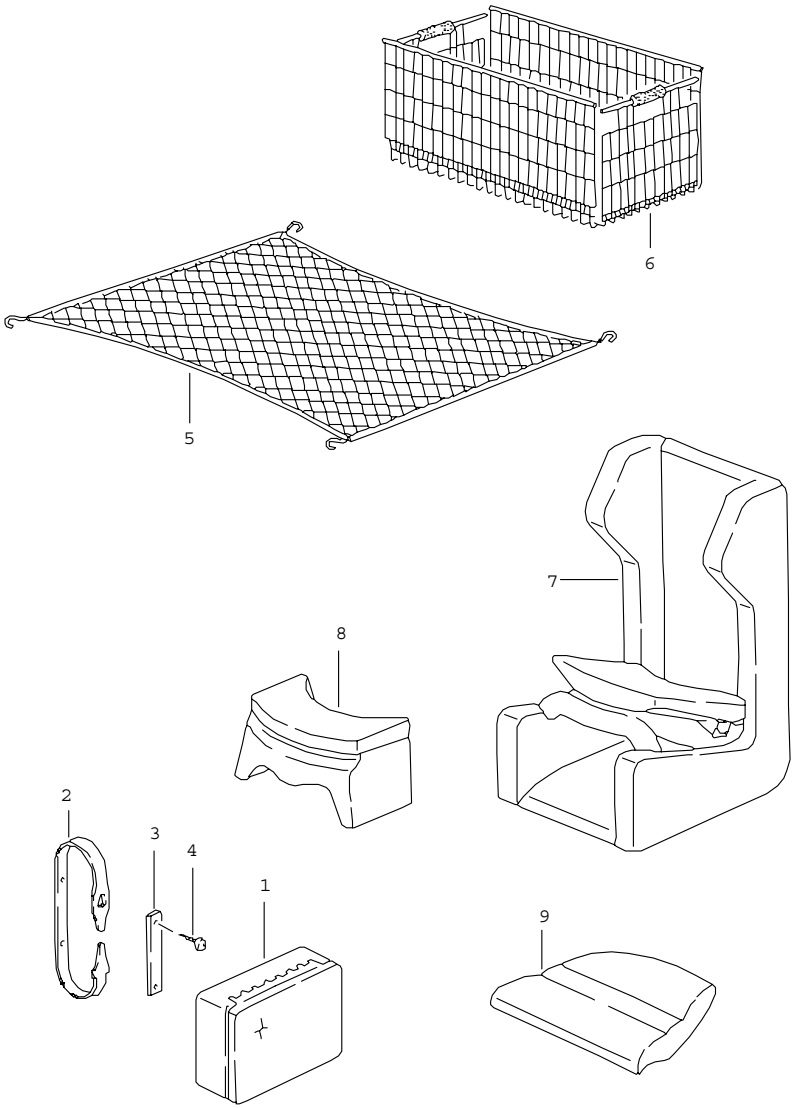

Pos	Part Number	Name	Remarks	Qty	Model
		accessories			
1	E 928 722 041 02	first-aid kit		1	
2	171 860 273	retaining strap first-aid kit		1	
3	171 860 269	retaining bracket first-aid kit		1	
4	900 145 035 02	counters. head tapp. screw 4,2 X 16		2	
5	477 863 539	luggage net		1	
6	E 000 043 002 00	car basket		1	
7	944 522 051 01	child car seat up to 4 years		1	
8	928 522 050 00	child car seat for children older than 4 years only together with child car seat cushion		1	
9	944 522 159 00	child car seat cushion	/L	1	
	4CR	black for back seat			
(9)	944 522 160 00	child car seat cushion	/R	1	
	4CR	black for back seat			
		- -- E N D -- -			

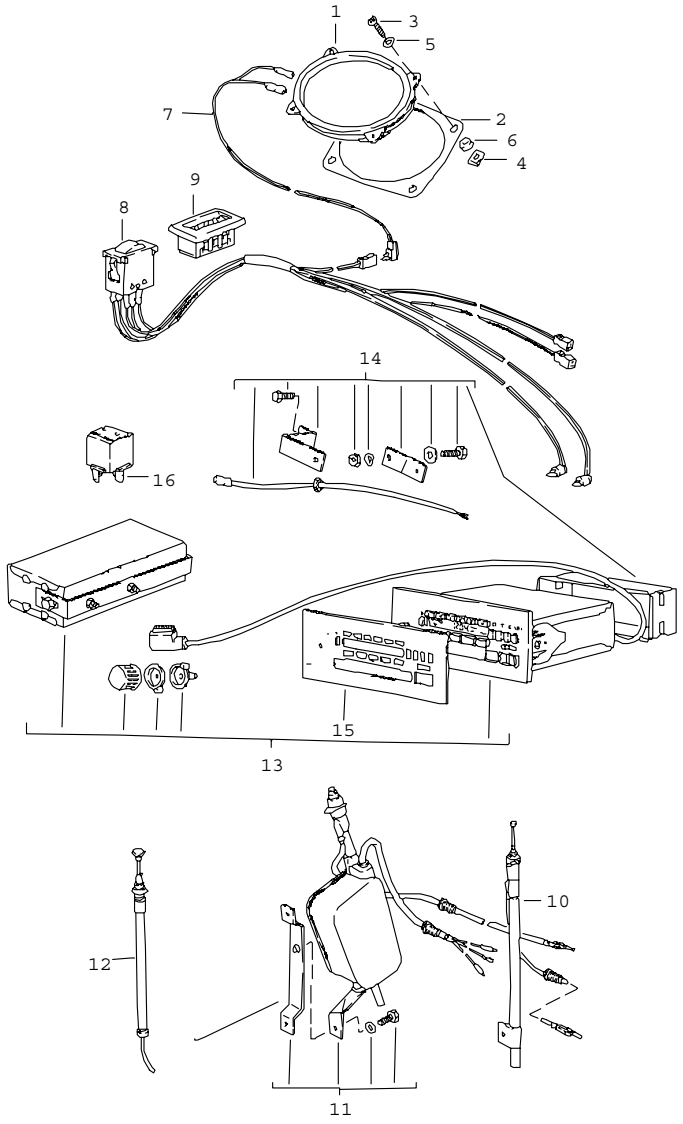

Pos	Part Number	Name	Remarks	Qty	Model
		radio with 3 loudspeaker			
		F >>94CN4 03921 F >>94DN4 00108			(J)
1	944 645 451 00	loudspeaker		3	
2	477 035 999	gasket loudspeaker rear		2	
3	N 013 962 2	tapping screw 3,9 X 16		12	
4	999 507 071 00	speed nut B 3,9 X 11,6		12	
5	900 151 028 02	washer 4,1		12	
6	477 035 375	bush		8	
7	E 477 035 440	cable for loudspeaker front		1	
(7)	E 477 035 440 B	cable for loudspeaker rear	/L	1	
(7)	E 477 035 440 A	cable for loudspeaker rear	/R	1	
8	477 035 465	fader		1	
9	477 035 463 A	rose fader		1	
10	E 944 645 101 00	antenna manual		1	
11	> 944 645 911 00	automatic antenna		1	
12	477 035 513	antenna rod for automatic antenna 477.035.510		1	
(11)	944 645 911 00	automatic antenna		1	
(12)	944 645 913 00	antenna rod for automatic antenna 944 645 911 00		1	
		car radio			

Pos	Part Number	Name	Remarks	Qty	Model
13	E 477 035 105	radio BAMBERG DIGITAL SUPERARIMAT "DE"		1	(CH),(D),(A)
14	E 477 035 619	installation set		1	
15	477 035 915	cover		1	(CH),(D),(A)
(13)	E 477 035 108	radio BAMBERG DIGITAL SUPERARIMAT "RW"		1	
14	E 477 035 619	installation set		1	
15	477 035 917	cover		1	
16	321 919 505	relay		1	
		- -- E N D -- -			

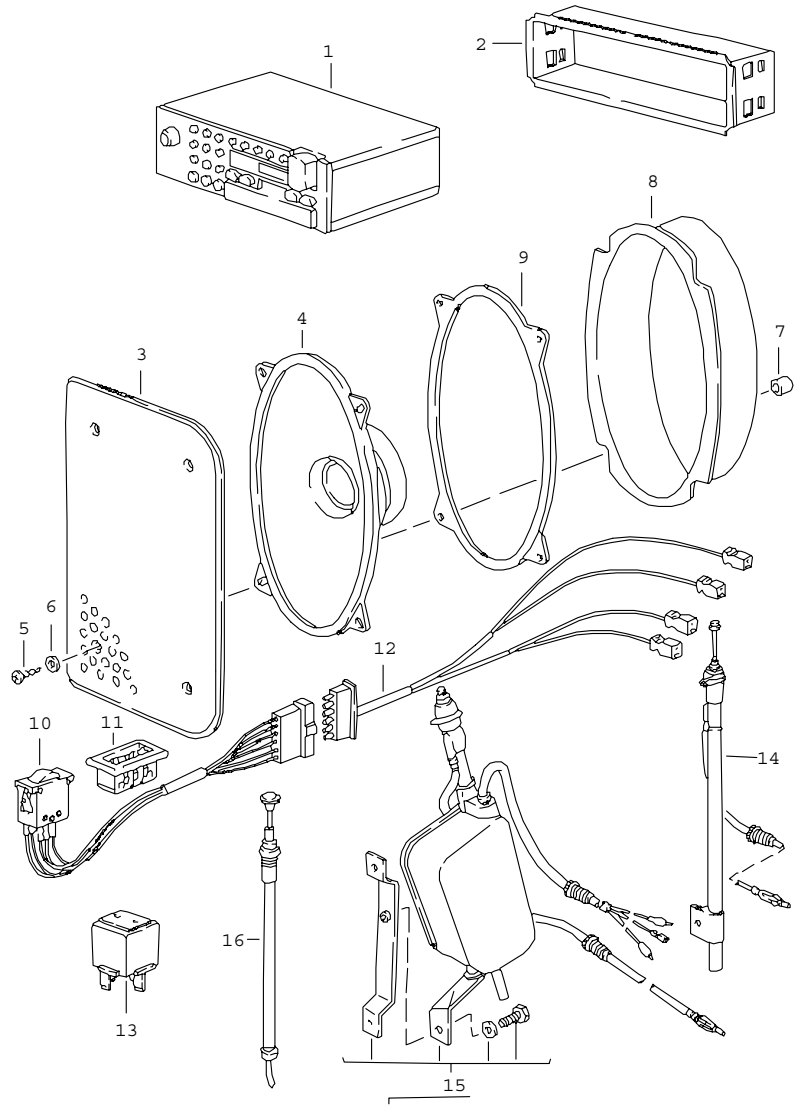

Pos	Part Number	Name	Remarks	Qty	Model
		radio with 4 loudspeaker			
		F 94CN4 00111>> F 94DN4 00109>>			(J)
1	> 911 645 106 00	radio KOELN SQR 22		1	(D),(A),(CH)
(1)	E 911 645 106 01	radio KOELN SQR 23		1	(D),(A),(CH)
1	> 911 645 147 00	radio ATLANTA SQR22		1	
(1)	> 911 645 147 01	radio ATLANTA SQR 23		1	
(1)	> 911 645 157 00	radio HAMBURG SQM 24	85-	1	(D),(A),(CH)
(1)	E 911 645 158 00	radio BOSTON SQM 23	85-	1	
2	911 645 173 02	retaining frame		1	
3	477 867 081	loudspeaker grille	/V	2	
	01C	black			
	4RB	brown			
4	E 944 645 421 00	loudspeaker		4	
5	900 145 041 07	tapping screw	/V	8	
(5)	N 013 962 2	tapping screw 3,9 X 16	/H	8	
6	900 151 028 02	washer	/H	8	
7	477 867 373	bush	/V	8	
(7)	477 035 375	bush	/H	8	
8	944 645 015 00	water protection	/V	2	
9	477 035 999	gasket	/H	2	
10	477 035 465 A	fader		1	
11	477 035 463 A	rose		1	
12	E 477 035 440 C	wiring harness		1	
13	321 919 505	relay	-83	1	

Pos	Part Number	Name	Remarks	Qty	Model
(13)	944 615 103 00	switch unit for radio lifting roof	84-	1	
14	E 944 645 101 00	antenna manual		1	
15	> 944 645 911 00	automatic antenna		1	
16	477 035 513	antenna rod		1	
		- -- E N D -- -			

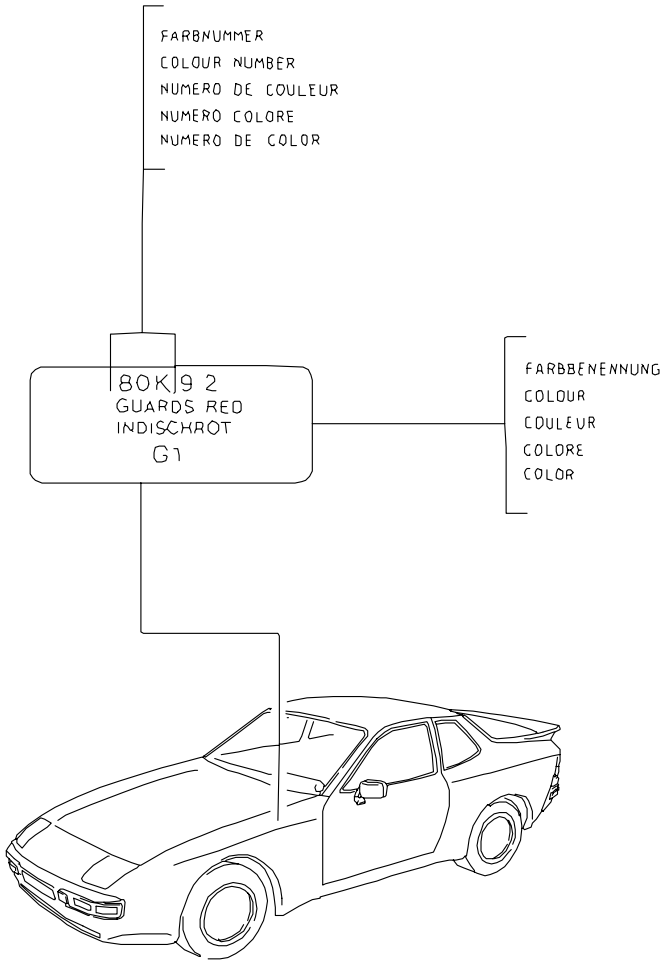

Pos	Part Number	Name	Remarks	Qty	Model
		lacquers basic materials			
-	911 096 050 00	polyester filler 1 KG GLASSIT-NON-FERRO 839-10		X	
-	911 096 051 00	hardener 30 GR GLASSIT 948-36 red		X	
-	911 096 052 00	primer filler 1 LTR GLASSOFIX 238-150		X	
-	911 096 053 00	hardener 500 ML GLASSOFIX 352-228		X	
-	911 096 054 00	primer filler 1 LTR GLASSODUR 285-100 white		X	
-	911 096 055 00	hardener 500 ML GLASSODUR 929-28/1		X	
-	911 096 056 00	wash primer 2 LTR GLASSOFIX 2K 934-200		X	
-	911 096 057 00	hardener 1 LTR GLASSOFIX 934-100		X	
-	911 096 058 00	polyurethane plastic putty 1 KG GLASSODUR 995-20		X	
-	911 096 059 00	hardener 1 KG GLASSODUR 929-13		X	
-	911 096 060 00	thinner 1 LTR GLASSODUR 352-91		X	
-	911 096 061 00	hardener 500 ML GLASSODUR 929-73		X	
-	911 096 062 00	additional lacquer 1 LTR GLASSODUR 521-111		X	

Pos	Part Number	Name	Remarks	Qty	Model
-	911 096 063 00	underbody protection 1 KG GLASSOHYD 1109-		X	
-	E 000 043 001 00	tin SN 90 % 200 G		X	
		synthetic resin prime coat metallic 1 LTR			
-	ALD 645 97A	diamond silver metallic		X	L 97A
-	ALD 645 Z7Z	gemini grey metallic		X	L Z7Z
-	ALD 645 B7V	graphite metallic		X	L B7V
-	ALD 645 A1Y	KALAHARI-METALLIC		X	L A1Y
-	ALD 645 A6V	lhasa metallic		X	L A6V
-	ALD 645 Y7Z	meteor metallic		X	L Y7Z
-	ALD 645 Y9V	montego black metallic		X	L Y9V
-	ALD 645 B8Z	MAHAGONI-METALLIC		X	L B8Z
-	ALD 645 Y5V	SAPHIR-METALLIC		X	L Y5V
-	ALD 645 D3V	sienna red metallic		X	L D3V
-	ALD 645 Y7U	stone grey metallic		X	L Y7U
-	ALD 645 A3Y	surinam metallic		X	L A3Y
-	ALD 645 Y7Y	zermatt silver metallic		X	L Y7Y
-	ALD 645 Y8V	sable brown metallic		X	L Y8V
-	911 095 903 80	synthetic resin prime coat metallic		X	
	822	garnet red metallic			L M3Y
	30T	light blue metallic			L M5Z
	966	light bronze metallic			L M1V
	33N	crystal green metallic			L M6Y
	20C	moss green metallic			L M6V
	655	platinum-metallic			L M8U
	708	black-metallic			L M9Y
	810	ruby red metallic			L M3V

Pos	Part Number	Name	Remarks	Qty	Model
-	911 096 064 00	clear lacquer 1 LTR GLASSODUR-MS 923-85		X	
		top-coat paint 2K 1 LTR			
-	ALN 769 90E	alpine white		X	L 90E
-	ALN 769 Y7A	gabon grey		X	L Y7A
-	ALN 769 A3B	gambia red		X	L A3B
-	ALN 769 D8A	havana brown		X	L D8A
-	ALN 769 Y5B	copenhagen blue		X	L Y5B
-	ALN 769 Y5A	mauritius blue		X	L Y5A
-	ALN 769 Y1L	pasadena yellow		X	L Y1L
-	911 095 902 60	top-coat paint		X	
	700	black			L 041
	536	pastel beige			L M1N
	027	guards red			L M3A
	451	mocha black			L M9V
		paint touch-up applicator			
-	L 090 E01	alpine white		X	L 90E
-	L 0Y7 A01	gabon grey		X	L Y7A
-	E L 0A3 B01	gambia red		X	L A3B
-	E L 0D8 A01	havana brown		X	L D8A
-	E L 0Y5 B01	copenhagen blue		X	L Y5B
-	E L 0Y5 A01	mauritius blue		X	L Y5A
-	E L 0Y1 L01	pasadena yellow		X	L Y1L
-	911 095 932 20	paint touch-up applicator		X	
	536	pastel beige			L M1N
	700	black			L 041
	027	guards red			L M3A
	451	mocha black			L M9V

Pos	Part Number	Name	Remarks	Qty	Model
		paint touch-up applicator set comprising: paint touch-up applicator top-coat paint paint touch-up applicator clear lacquer			
-	E L 097 A02	diamond silver metallic		X	L 97A
-	E L 0Z7 Z02	gemini grey metallic		X	L Z7Z
-	E L 0B7 V02	graphite metallic		X	L B7V
-	E L 0A1 Y02	KALAHARI-METALLIC		X	L A1Y
-	E L 0B8 Z02	MAHAGONI-METALLIC		X	L B8Z
-	E L 0Y7 U02	stone grey metallic		X	L Y7U
-	E L 0A6 V02	lhasa metallic		X	L A6V
-	E L 0Y7 Z02	meteor metallic		X	L Y7Z
-	E L 0Y9 V02	montego black metallic		X	L Y9V
-	E L 0Y5 V02	SAPHIR-METALLIC		X	L Y5V
-	E L 0A3 Y02	surinam metallic		X	L A3Y
-	E L 0D3 V02	sienna red metallic		X	L D3V
-	L 0Y7 Y02	zermatt silver metallic		X	L Y7Y
-	E L 0Y8 V02	sable brown metallic		X	L Y8V
-	911 095 933 20	paint touch-up applicator set		X	
	966	light bronze metallic			L M1V
	20C	moss green metallic			L M6V
	30T	light blue metallic			L M5Z
	655	platinum-metallic			L M8U
	708	black-metallic			L M9V
	822	garnet red metallic			L M3Y
	33N	crystal green metallic			L M6Y
		- -- E N D -- -			

Model	Year	MG	SG	Illustration	Restrictions	Update		
944	85	0	05	5-00		187	10:18	07.04.2005

Pos	Part Number	Name	Remarks	Qty	Model
		securing liquid sealing compound preservative agent			
		securing liquid			
-	928 101 921 00	loctite -270- 10 CCM high strength		X	
-	000 043 012 00	loctite -221- 10 CCM low strength		X	
		sealing compound			
-	000 043 010 00	loctite -574- 50 CCM		X	
-	000 043 011 00	loctite -638- 10 CCM for balance shaft		X	
-	000 043 013 00	loctite adhesive remover -80646- spraying can		X	
-	AMV 176 000 05	adhesive sealing compound 310 CCM		1	
		loctite for pasting metal glass ceramics thermoset plastic adhesive set comprising:		X	
-	000 043 051 00	adhesive loctite -317- 50 CCM		X	
-	000 043 202 65	loctite AKTIVATOR NF 736 180 CCM		X	
-	000 043 019 01	sealing compound SILASTIK 730 RTV 90 CCM		X	
-	000 043 004 00	mounting paste optimoly ht 1 90-g tube		X	

Model	Year	MG	SG	Illustration	Restrictions	Update		
944	85	0	05	5-00		187	10:18	07.04.2005

Pos	Part Number	Name	Remarks	Qty	Model
-	000 043 020 00	optimoly mounting paste OPTIMOLY - TA 1 tube 100 g silver		X	
-	000 043 110 01	grease OPTITEMP PU35 1 TUBE 100 G		X	
-	000 043 204 21	grease for lock cylinder spraying can preservative agent		X	
-	999 571 062 00	care kit comprising: suitcase		1	
-	999 901 013 40	liquid preservative		1	
-	999 901 014 41	cleaning agents		1	
-	999 901 015 40	polisher		1	
-	999 901 016 40	tar remover		1	
-	999 901 017 40	dashboard cleaner		1	
-	999 901 018 40	paint polish		1	
-	999 901 019 41	insect remover		1	
-	999 901 020 40	spot remover		1	
-	999 901 021 40	polishing cotton		1	
-	999 901 022 40	polishing cloth		1	
-	000 044 000 02	preservative agent 250 ML		X	
-	999 901 017 41	window cleaner summer 250 ML		X	
-	999 901 033 40	window cleaner winter 1000 ML		X	
-	999 901 036 40	car shampoo refilling bottle 1000 ML		X	
-	999 917 803 00	window cleaner spray bottle 250 ML		X	
-	928 628 931 00	silicone remover 1000 ML		X	

Model	Year	MG	SG	Illustration	Restrictions	Update		
944	85	0	05	5-00		187	10:18	07.04.2005

Pos	Part Number	Name	Remarks	Qty	Model
-	999 901 030 40	rim cleaner spray bottle 500 ML		X	
-	999 901 031 40	rim cleaner refilling bottle 1000 ML		X	
		- -- E N D -- -			

Model	Year	MG	SG	Illustration	Restrictions	Update			
944	85	1	01	101-00		187	10:19	07.04.2005	PORSCHE PET PORSCHE

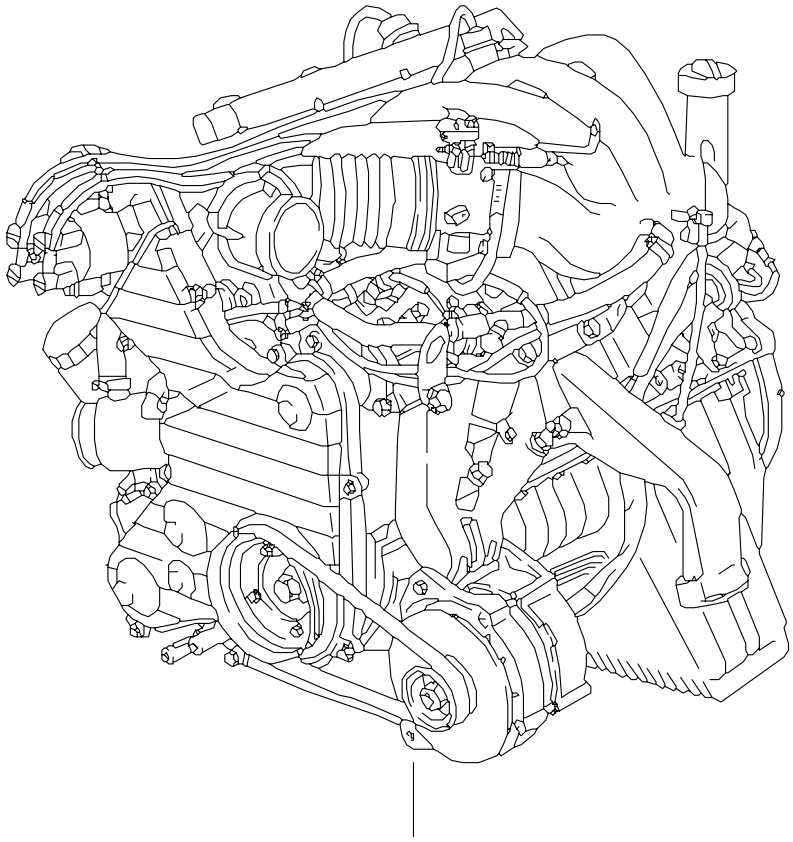

Pos	Part Number	Name	Remarks	Qty	Model
		short engine			
1	944 100 902 00	short engine		1	M44.01/03 M44..A
1	944 100 902 01	short engine		1	M44.02/04 M44..B
		- -- E N D -- -			

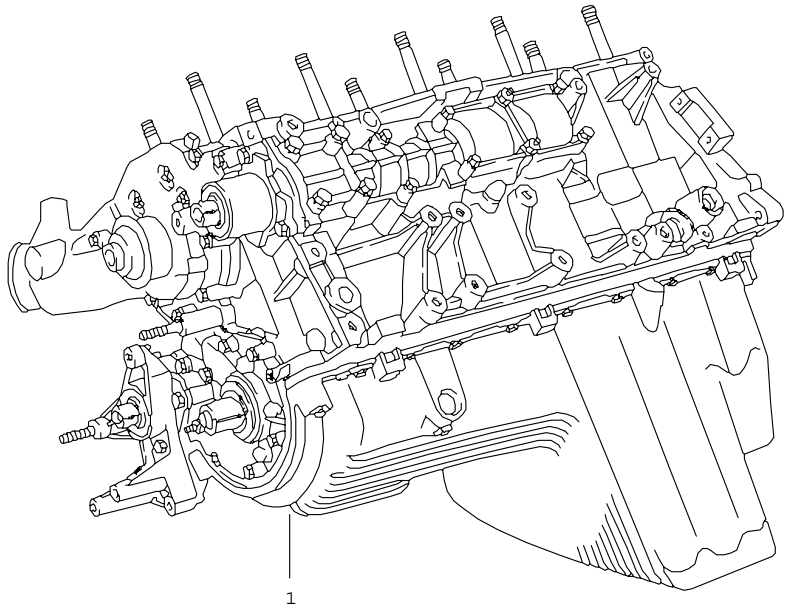

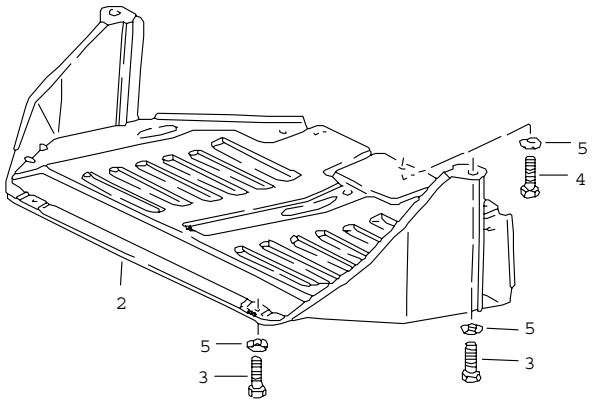

Pos	Part Number	Name	Remarks	Qty	Model
		protective plate			
1	944 341 161 03	protective plate		1	
2	N 010 215 13	hexagon-head bolt M 6 X 15		4	
3	900 075 014 02	hexagon-head bolt M 6 X 18		3	
4	900 151 003 02	washer 6,1		7	
		- -- E N D -- -			

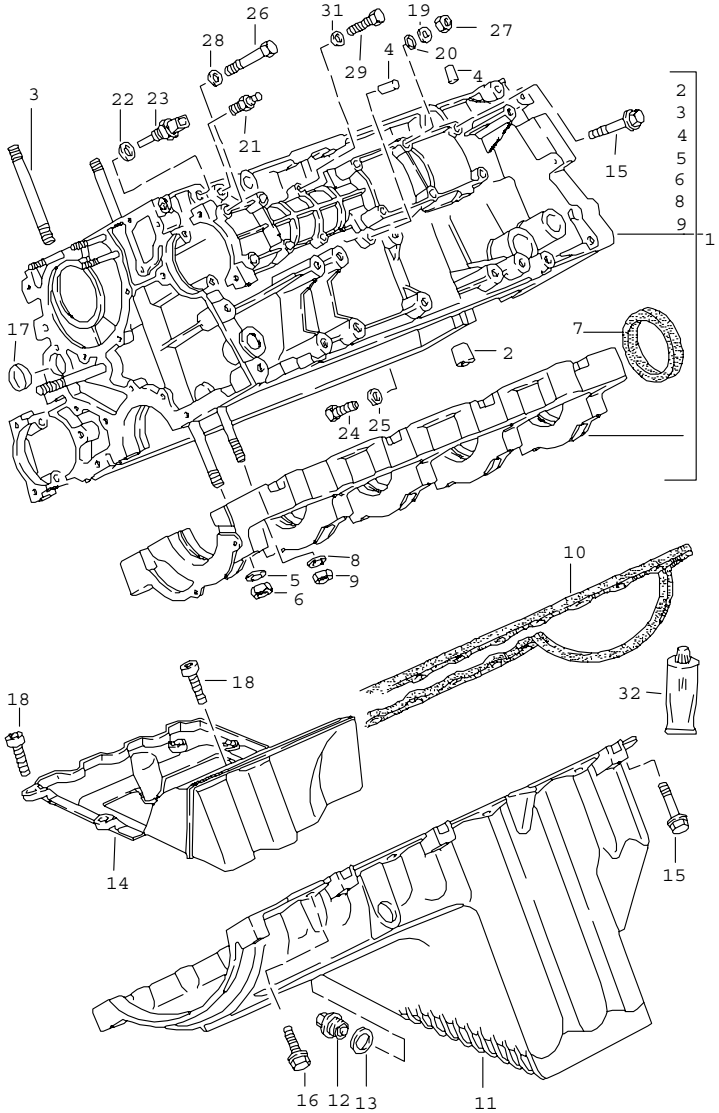

Pos	Part Number	Name	Remarks	Qty	Model
		crankcase			
2	928 101 195 03	fitting bushing		1	
3	944 101 197 00	stud		10	
4	999 012 034 00	straight pin 8 X 12		4	
5	944 104 229 00	washer		10	
6	N 011 020 8	hexagon nut M 12 X 1,5		10	
8	928 101 303 00	washer		7	
9	N 011 010 13	hexagon nut M 10		7	
10	* 944 101 205 02	oil sump gasket		1	
11	944 101 201 11	oil pan see tpi GR. 1 NR. 21		1	
12	944 107 197 01	screw plug		1	
13	* 900 123 118 30	sealing ring 22 X 27		1	
14	944 107 389 01	insert for oil sump		1	
15	900 075 344 02	hexagon-head bolt M 6 X 50		12	
16	900 075 341 02	screw M 6 X 25		18	
17	N 011 919 1	cover		2	
18	900 119 001 02	pan-head screw M 5 X 12		7	
19	928 107 165 00	washer		4	
20	999 701 006 40	o-ring		4	
21	047 919 501 A	temperature sensor M >> 41E 09029 M >> 41E 20779 M >> 43E 14858 M >> 43E 21783		1	
21	928 606 201 01	remote temperature sensor M 41E 09030 >> M 41E 20779 >> M 43E 14858 >> M 43E 21783 >>		1	

Pos	Part Number	Name	Remarks	Qty	Model
22	* 900 123 006 30	sealing ring 12 X 18		1	
23	944 606 125 00	temperature sensor		1	
24	900 075 087 02	hexagon-head bolt M 8 X 16		1	
25	900 123 105 30	sealing ring 8 X 14		1	
26	900 074 139 02	hexagon-head bolt M 8 X 55		8	
(26)	900 074 139 02	hexagon-head bolt M 8 X 55	/L	4	M657
(26)	N 010 361 4	hexagon-head bolt M 8 X 65	/R	4	M657
27	N 011 008 8	hexagon nut M 8		4	
28	N 011 525 13	washer A 8,4		12	
29	900 074 015 02	hexagon-head bolt M 6 X 30 M >> 41D C147 M >> 41D 5642 M >> 43D C671 M >> 43D 6575		4	 M44.01 M44.03 M44.02 M44.04
(29)	900 075 349 02	hexagon-head bolt M 6 X 42 M 41D C148 >> M 41D 5643 >> M 43D C672 >> M 43D 6576 >>		4	 M44.01 M44.03 M44.02 M44.04
31	N 011 524 7	washer A 6,4		4	
-	944 101 147 00	bracket	-84	1	
-	944 101 147 01	bracket	85	1	
32	000 043 019 01	sealing compound SILASTIK RTV 730 1 tube 125 ML		X	
		- -- E N D -- -			

Pos	Part Number	Name	Remarks	Qty	Model

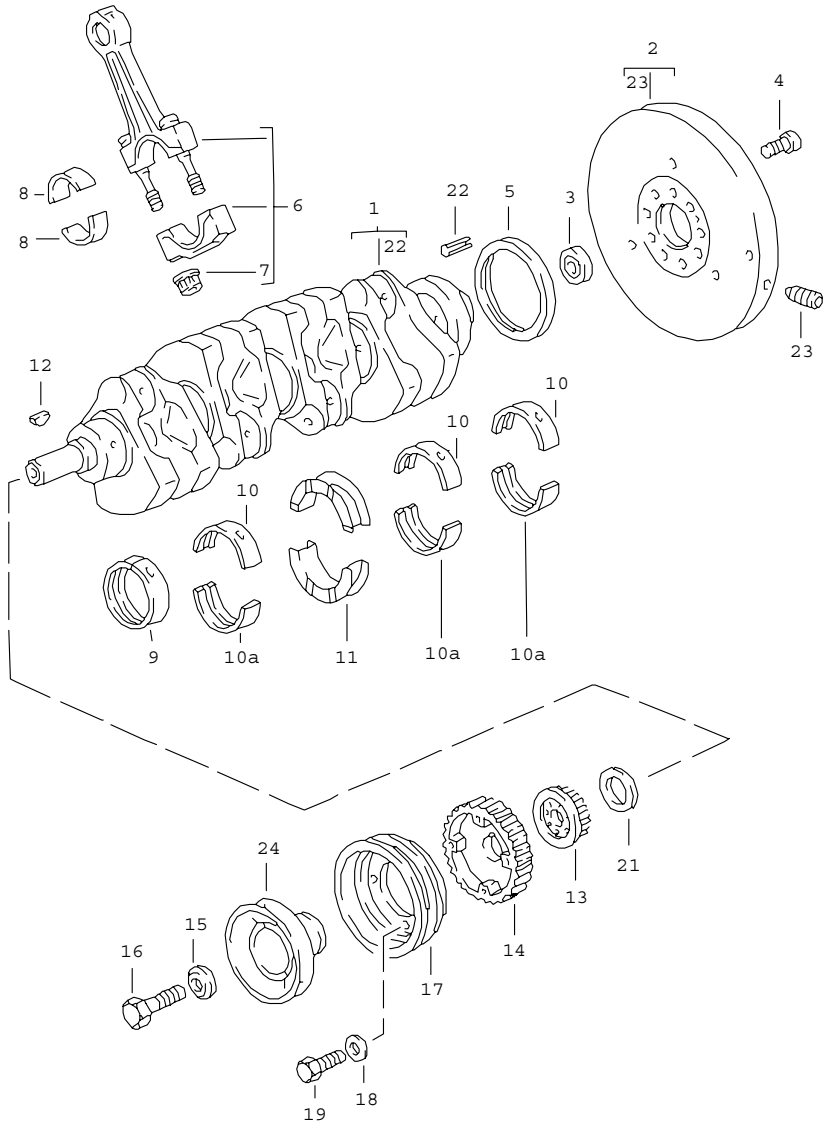

Pos	Part Number	Name	Remarks	Qty	Model
		crankshaft connecting rod			
		see tpi group 1 NR. 13			
1	944 102 015 13	crankshaft M >> 41D 1955 M >> 41D 5237 M >> 43D 4359 M >> 43D 5621		1	 M44.01 M44.03 M44.02 M44.04
		use also: 944.102.210.02			
2	944 102 051 00	flywheel		1	M44.01/02
2	944 102 053 01	flywheel		1	M44.03/04
3	931 102 111 00	deep-groove ball bearing		1	
4	930 102 206 00	pan-head screw		9	
5	* 999 113 264 40	radial sealing ring		1	
6	944 103 001 01	connecting rod		4	
		for engine M 41D A760 >> 41D B069 M 41D A760 >> 41D B069 M 41D 5521 >> 41D 5574 M 43D E052 >> 43D E682 M 43D 6294 >> 43D 6313 M 43E 04625 >> 43E 04630 M 43E 04645 >> 43E 04867			 M44.01 M44.03 M44.02 M44.04 M44.02 M44.02
		connecting rods only by sets			
(7)	928 103 172 02	connecting rod nut		8	
8	928 103 143 02	bearing shell		8	
(8)	928 103 143 52	bearing shell oversize 0,25 mm		X	
9	928 101 117 08	main bearing bush i		1	
9	928 101 117 58	main bearing bush i undersize 0,25 mm		1	
9	928 101 117 60	main bearing bush i undersize 0,50 mm		1	
10	928 101 115 00	main bearing upper half 2,4,5		3	

Pos	Part Number	Name	Remarks	Qty	Model
10A	928 101 115 01	main bearing shell lower half 2,4,5		3	
10	928 101 115 50	main bearing shell upper half 2,4,5 undersize 0,25 mm		3	
10A	928 101 115 51	main bearing shell lower half 2,4,5 undersize 0,25 mm		3	
10	928 101 115 60	main bearing shell upper half 2,4,5 undersize 0,50 mm		3	
10A	928 101 115 61	main bearing shell lower half 2,4,5 undersize 0,50 mm		3	
11	928 101 133 03	thrust bearing		2	
11	928 101 133 53	thrust bearing undersize 0,25 mm		2	
11	928 101 133 63	thrust bearing undersize 0,50 mm		2	
12	N 012 713 1	woodruff key 5 X 6,5		X	
		M >> 41C 2375			M44.01
		M >> 41C 5240			M44.03
		M >> 43D 0817			M44.02
		M >> 43D 5133			M44.04
12	900 117 036 00	key 5 X 5 X 22		1	
13	944 105 125 02	gear wheel camshaft driving mechanism		1	
14	944 102 209 11	gear wheel balance shaft driving mechanism		1	
15	944 102 210 02	washer		1	
16	900 082 085 02	hexagon-head bolt M 16 X 1,5 X 60		1	
17	944 102 116 07	pulley		1	
18	N 011 524 7	washer A 6,4		4	
19	900 075 057 02	hexagon-head bolt M 6 X 16		4	
21	900 234 127 00	support washer		1	
22	900 095 031 00	tensioning sleeve 6 X 16		1	
23	477 105 276	threaded pin		1	
24	944 102 214 02	pulley		1	M657

- -- E N D -- -

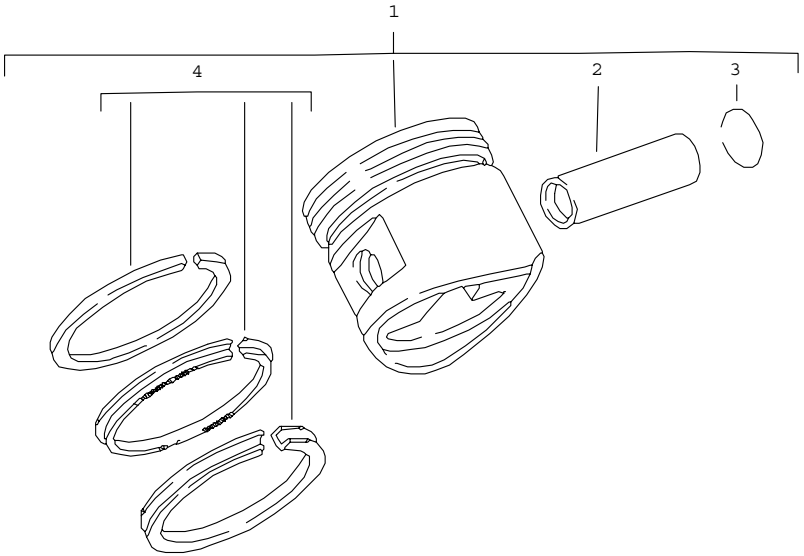

Pos	Part Number	Name	Remarks	Qty	Model
		piston piston rings			
1	944 103 074 04	piston 100,00 MM tolerance group 0		4	M44.01/03
1	944 103 074 14	piston 100,00 MM tolerance group 1		4	M44.01/03
1	944 103 074 24	piston 100,00 MM tolerance group 2		4	M44.01/03
1	E 944 103 074 53	piston 100,50 MM tolerance group 0		4	M44.01/03
1	944 103 074 63	piston 100,50 MM tolerance group 1		4	M44.01/03
1	944 103 074 73	piston 100,50 MM tolerance group 2		4	M44.01/03
1	944 103 091 07	piston 100,00 MM MAHLE tolerance group 0		4	M44.02/04
1	944 103 091 17	piston 100,00 MM MAHLE tolerance group 1		4	M44.02/04
1	944 103 091 27	piston 100,00 MM MAHLE tolerance group 2		4	M44.02/04
1	944 103 091 57	piston 100,50 MM MAHLE tolerance group 0		4	M44.02/04
1	944 103 091 67	piston 100,50 MM MAHLE tolerance group 1		4	M44.02/04
1	944 103 091 77	piston 100,50 MM MAHLE tolerance group 2		4	M44.02/04

Pos	Part Number	Name	Remarks	Qty	Model	Pos	Part Number	Name	Remarks	Qty	Model
2	900 401 003 00	piston pin for - KS - piston		4							
3	N 012 277 1	snap ring		8							
4	* 944 103 902 82	set of piston rings 100,00 MM		4							
4	944 103 902 92	set of piston rings 100,50 MM		4							
		- -- E N D -- -									

Model	Year	MG	SG	Illustration	Restrictions	Update				
944	85	1	03	103-00		187	10:20	07.04.2005	PORSCHE	PET	PORSCHE

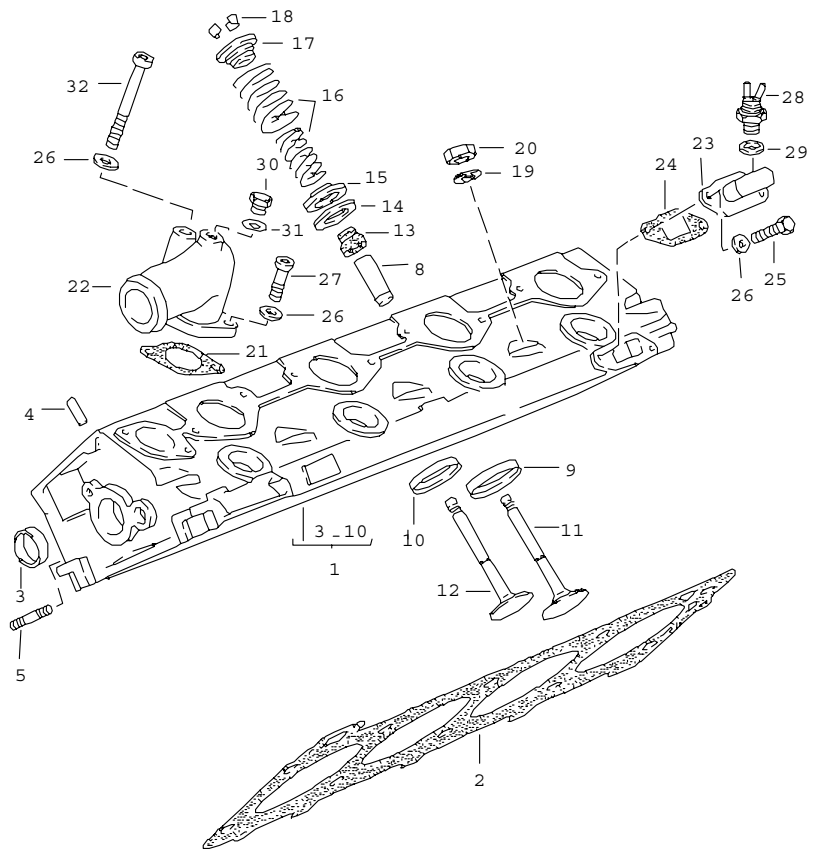

Pos	Part Number	Name	Remarks	Qty	Model
		cylinder head valves			
1	> 944 104 033 05	cylinder head		1	
2	951 104 374 02	cylinder head gasket		1	
(2)	951 104 374 50	cylinder head gasket for resurfaced cylinder heads		1	
3	900 036 005 02	cover		2	
4	900 302 019 00	straight pin		2	
5	999 062 044 02	stud M 8 X 30		8	
8	A 944 104 328 51	valve guide		8	
8	944 104 328 51	valve guide oversize		8	
9	944 104 331 51	valve seat ring intake oversize		4	
10	944 104 333 50	valve seat ring exhaust oversize		4	
11	928 105 409 02	intake valve		4	
12	928 105 410 04	exhaust valve		4	
13	* 928 104 193 12	valve stem seal		8	
14	928 105 468 03	washer 0,5 MM		X	
14	928 105 470 03	washer 1,0 MM		X	
15	928 105 469 06	washer		8	
16	928 105 905 09	set of valve springs		8	
17	928 105 449 04	concave washer		8	
18	901 105 417 00	collet		16	
19	944 104 229 00	washer		10	
20	999 076 043 02	hexagon nut M 12 X 1,5		10	
21	* 944 104 311 00	gasket		1	

Pos	Part Number	Name	Remarks	Qty	Model
22	944 104 315 04	cooling water socket M >> 41D 1285 M >> 41D 5164 M >> 43D 3439 M >> 43D 5517 use also: 944.106.239.02		1	 M44.01 M44.03 M44.02 M44.04
23	944 104 317 04	adapter		1	
(23)	944 104 317 05	adapter		1	(AUS)(J)
24	* 928 106 197 04	gasket		1	
25	900 075 079 02	hexagon-head bolt M 8 X 20		2	
26	N 011 525 13	washer A 8,4		4	
27	E 900 119 048 02	pan-head screw M 8 X 25	-83	2	
27	N 014 725 2	pan-head screw M 8 X 25	84-	2	
28	058 131 851 A	thermo valve		1	(AUS)(J)
29	N 013 808 3	sealing ring A 10 X 16		1	(AUS)(J)
30	931 106 156 00	screw plug		1	
31	N 013 830 7	sealing ring A 8 X 12		1	
32	E 900 119 086 02	pan-head screw M 8 X 75	-83	1	
32	N 044 732 1	pan-head screw M 8 X 75	84-	1	
		- -- E N D -- -			

Model	Year	MG	SG	Illustration	Restrictions	Update	10:20	07.04.2005	PORSCHE	PET	PORSCHE
944	85	1	03	103-05		187					

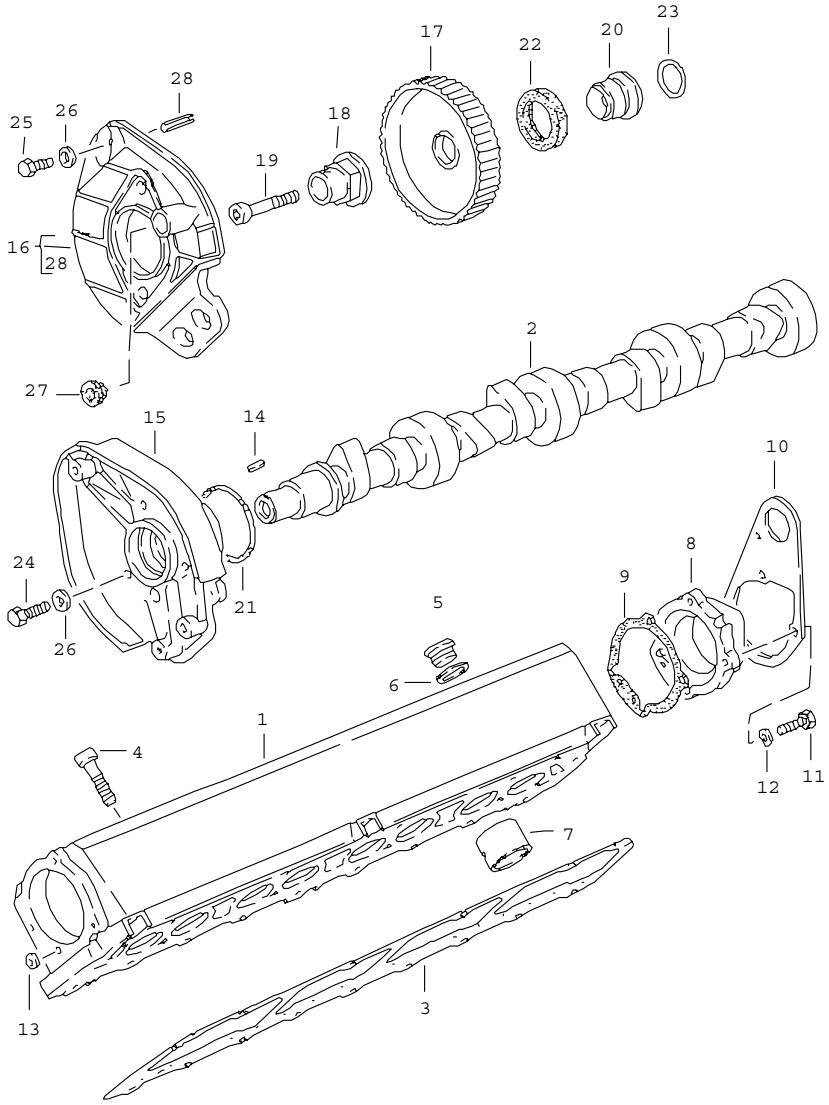

Pos	Part Number	Name	Remarks	Qty	Model
		camshaft housing camshaft			
1	944 105 250 07	camshaft housing		1	
2	944 105 155 05	camshaft		1	
3	* 928 105 199 12	gasket		1	
4	900 067 214 02	pan-head screw M 8 X 35		15	
5	900 219 009 30	screw plug M 18 X 1,5		6	
6	* 900 123 140 30	sealing ring A 18 X 22		6	
7	928 105 311 06	hydraulic valve tappet		8	
8	928 105 153 04	cover		1	
9	* 928 105 189 02	gasket		1	
10	944 101 413 02	engine lifting bracket		1	
11	900 075 016 02	hexagon-head bolt M 6 X 22		3	
12	N 012 226 5	spring washer B 6		3	
13	* 928 105 184 00	sealing ring		1	
14	900 117 045 00	key 4 X 4		1	
15	944 105 119 03	camshaft bearing		1	
16	944 105 029 01	bracket		1	
17	944 105 545 03	camshaft timing gear		1	
18	944 105 142 00	driver		1	
19	999 510 022 08	pan-head screw M 10 X 65		1	
20	928 105 139 02	spacer sleeve M >> 41F 42953 M >> 41F 50390		1	 M44.01 M44.03
20	928 105 139 04	spacer sleeve M 41F 42953 >> M 41F 50391 >>		1	 M44.01 M44.03
21	* 999 701 602 40	o-ring 50 X 5		1	

Pos	Part Number	Name	Remarks	Qty	Model
22	* 999 113 282 40	shaft seal 30 X 47 M >> 41F 42952 M >> 41F 50390		1	 M44.01 M44.03
22	999 113 349 40	shaft seal 32 X 47 M 41F 42953 >> M 41F 50391 >>		1	 M44.01 M44.03
23	* 944 105 321 00	gasket		1	
24	N 010 347 3	hexagon-head bolt M 6 X 35		3	
25	900 074 015 02	hexagon-head bolt M 6 X 30		3	
26	N 011 524 7	washer A 6,4		6	
27	944 105 131 00	plug		1	
28	999 095 103 01	roll pin 8 X 16		2	
		- -- E N D -- -			

Model	Year	MG	SG	Illustration	Restrictions	Update			
944	85	1	03	103-10		187	10:21	07.04.2005	PORSCHE PET PORSCHE

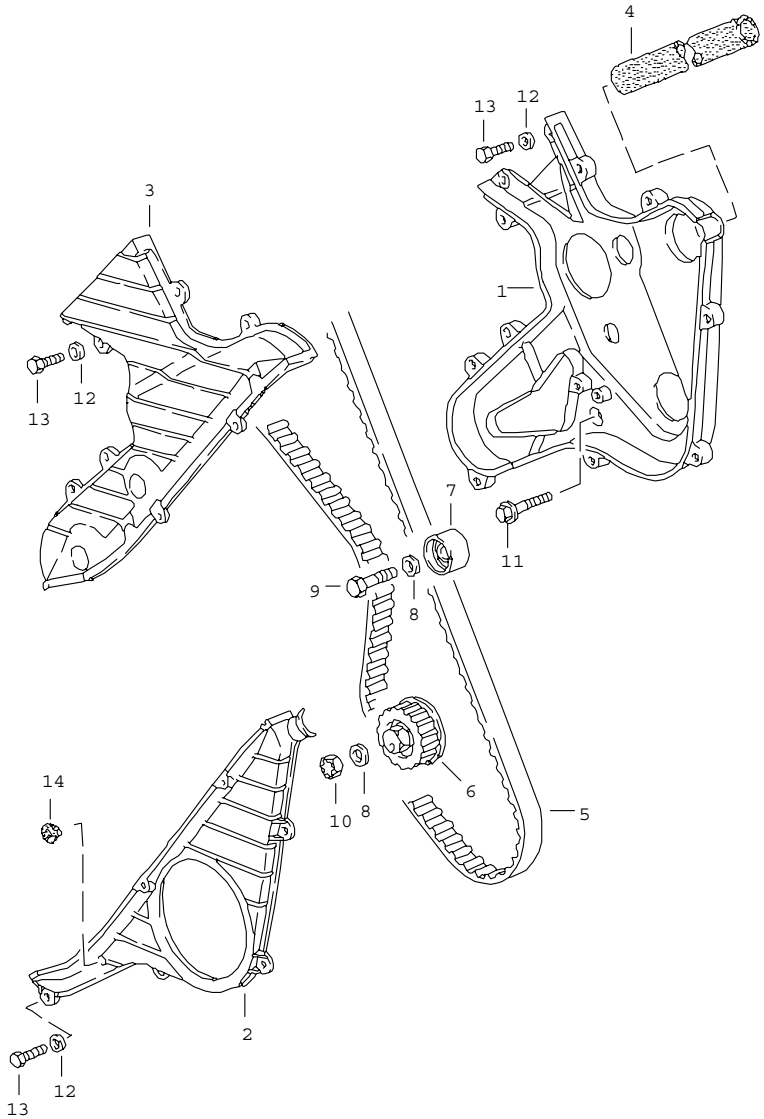

Pos	Part Number	Name	Remarks	Qty	Model
		driving mechanism camshaft			
1	944 105 045 04	toothed belt covering		1	
2	944 105 048 00	toothed belt covering		1	
3	944 105 047 00	toothed belt covering		1	
4	944 105 149 01	hose		1	
5	944 105 157 04	toothed belt		1	
6	944 105 027 04	tensioning roller		1	
7	944 105 273 02	roller		1	
8	N 011 527 12	washer A 10,5		2	
9	900 075 111 08	hexagon-head bolt M 10 X 35		1	
10	N 022 149 2	lock nut M 10		1	
11	900 075 344 02	hexagon-head bolt M 6 X 50		2	
12	N 011 524 7	washer A 6,4		11	
13	999 072 005 09	hexagon-head bolt M 6 X 12		11	
14	999 703 164 40	plug		1	
		- -- E N D -- -			

Model	Year	MG	SG	Illustration	Restrictions	Update			
944	85	1	03	103-15		187	10:21	07.04.2005	PORSCHE PET PORSCHE

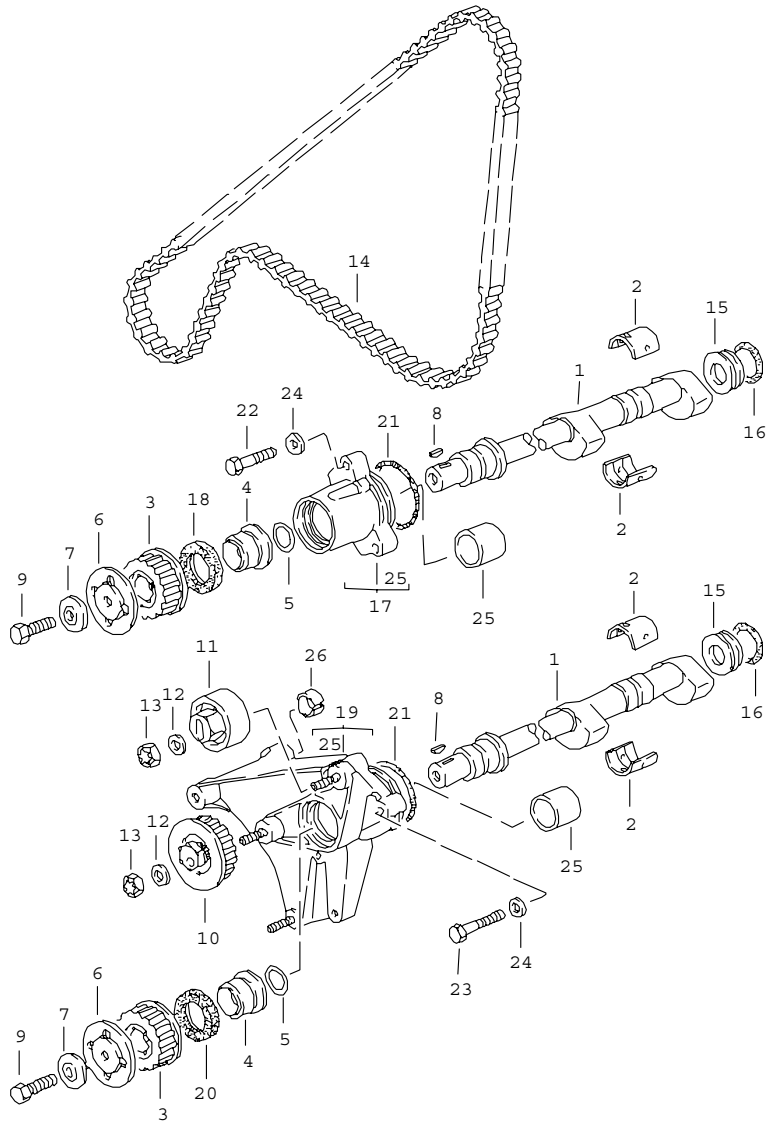

Pos	Part Number	Name	Remarks	Qty	Model
		driving mechanism balance shaft			
1	944 102 201 07	balance shaft	-84	2	
1	944 102 023 00	balance shaft	85	2	
2	944 101 121 07	bearing shell		4	
2	944 101 121 50	bearing shell oversize 0,50 mm		4	
3	944 102 205 04	gear wheel		2	
4	928 105 139 02	spacer sleeve		2	
5	* 944 105 321 00	gasket		2	
6	944 102 281 04	flange washer		2	
7	944 102 213 00	washer		2	
8	900 118 005 00	woodruff key		2	
9	N 010 275 3	hexagon-head bolt M 10 X 35		2	
10	944 102 025 07	tensioning roller		1	
11	944 102 277 06	roller		1	
12	N 011 527 12	washer A 10,5		2	
13	N 022 149 2	lock nut M 10		2	
14	944 102 219 04	toothed belt		1	
15	944 101 145 02	ring		2	
16	* 999 701 614 40	round seal 23,16 X 5,33		2	
17	944 101 045 00	gear carrier	/L	1	
18	* 999 113 282 40	shaft seal 30 X 47	/L	1	
19	944 101 042 00	gear carrier	/R	1	
20	* 999 113 281 40	shaft seal 30 X 48	/R	1	
21	* 999 701 652 40	o-ring 56,7 X 3,53		2	

Pos	Part Number	Name	Remarks	Qty	Model
22	N 010 335 5	hexagon-head bolt M 8 X 35		3	
23	900 074 040 02	hexagon-head bolt M 8 X 50	-83	3	
23	N 010 360 6	hexagon-head bolt M 8 X 60		3	M657
24	900 025 007 02	washer A 8,4		6	
25	944 101 125 02	bearing sleeve		2	
25	944 101 125 50	bearing sleeve oversize 0,50 mm		2	
26	944 347 441 00	dowel sleeve		1	
		- -- E N D -- -			

Pos	Part Number	Name	Remarks	Qty	Model

Model	Year	MG	SG	Illustration	Restrictions	Update				
944	85	1	04	104-00		187	10:21	07.04.2005	PORSCHE	PET	PORSCHE

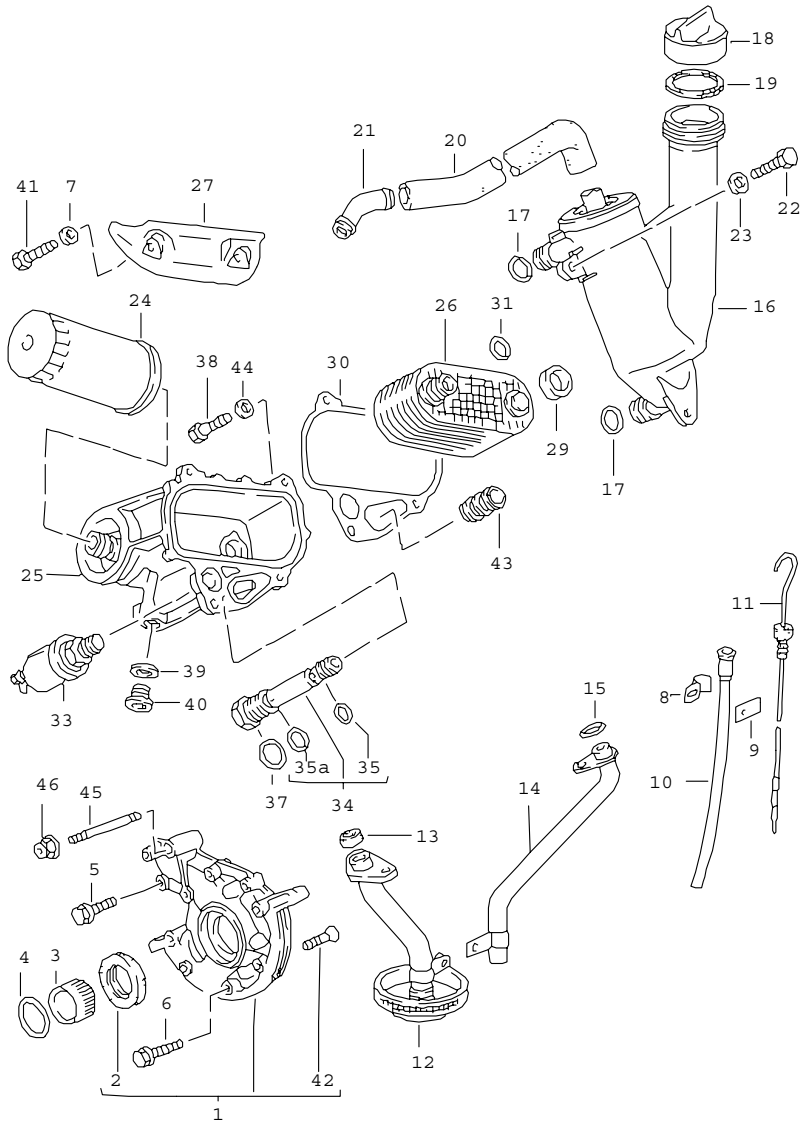

Pos	Part Number	Name	Remarks	Qty	Model
		engine lubrication			
1	944 107 014 09	oil pump		1	
		M >> 41E 09029			M44.01
		M >> 41E 20779			M44.03
		M >> 43E 14858			M44.02
		M >> 43E 21783			M44.04
		use also:			
		944.102.216.01		1	
		944.102.243.00		1	
(1)	944 107 014 11	oil pump		1	
		M 41E 09030 >>			M44.01
		M 41E 20780 >>			M44.03
		M 43E 14859 >>			M44.02
		M 43E 21784 >>			M44.04
		use also:			
		944.107.911.01		1	
2	* 999 113 268 40	shaft seal	-84	1	
		38 X 55 X 7			
		M >> 41E 09029			M44.01
		M >> 41E 20779			M44.03
		M >> 43E 14858			M44.02
		M >> 43E 21783			M44.04
(2)	999 113 331 40	shaft seal		1	
		38 X 52 X 7			
		M 41E 09030 >>			M44.01
		M 41E 20780 >>			M44.03
		M 43E 14859 >>			M44.02
		M 43E 21784 >>			M44.04
3	944 107 161 01	sleeve		1	
		M >> 41E 09029			M44.01
		M >> 41E 20779			M44.03
		M >> 43E 14858			M44.02
		M >> 43E 21783			M44.04
(3)	944 107 161 02	sleeve		1	
		M 41E 09030 >>			M44.01
		M 41E 20780 >>			M44.03
		M 43E 14859 >>			M44.02
		M 43E 21784 >>			M44.04
4	* 999 707 283 40	round seal		1	
		28 X 2,58			
5	900 075 345 02	hexagon-head bolt		4	
		M 6 X 35			
6	900 075 343 02	hexagon-head bolt		3	
		M 6 X 45			
7	N 011 524 7	washer		9	
		A 6,4			

Pos	Part Number	Name	Remarks	Qty	Model
8	944 101 225 00	clip		1	
9	944 101 231 00	retaining bracket		1	
10	E 944 101 223 00	guide tube		1	
11	944 107 221 01	oil level dipstick		1	
		M >> 41D A683			M44.01
		M >> 41D 5520			M44.03
		M >> 43D D868			M44.02
		M >> 43D 6293			M44.04
11	944 107 221 02	oil level dipstick		1	
		M 41D A684 >>			M44.01
		M 41D 5521 >>			M44.03
		M 43D D869 >>			M44.02
		M 43D 6294 >>			M44.04
12	944 107 032 06	suction tube		1	
		M >> 41D A683			M44.01
		M >> 41D 5520			M44.03
		M >> 43D D868			M44.02
		M >> 43D 6293			M44.04
12	944 107 032 06	suction tube		1	
		M 41D A684 >>			M44.01
		M 41D 5521 >>			M44.03
		M 43D D869 >>			M44.02
		M 43D 6294 >>			M44.04
13	* 944 107 136 03	sealing ring		1	
		21 X 2,8			
14	944 107 183 05	return pipe		1	
		M >> 41D A683			M44.01
		M >> 41D 5520			M44.03
		M >> 43D D868			M44.02
		M >> 43D 6293			M44.04
14	944 107 183 03	return pipe		1	
		M 41D A684 >>			M44.01
		M 41D 5521 >>			M44.03
		M 43D D869 >>			M44.02
		M 43D 6294 >>			M44.04
15	* 999 701 647 40	o-ring		1	
		14 X 1,5			
		M >> 41D A683			M44.01
		M >> 41D 5520			M44.03
		M >> 43D D868			M44.02
		M >> 43D 6293			M44.04
16	944 107 180 06	oil separator		1	
		M >> 41D A683			M44.01
		M >> 41D 5520			M44.03
		M >> 43D D868			M44.02
		M >> 43D 6293			M44.04
16	944 107 180 08	oil separator		1	
		M 41D A684 >>			M44.01
		M 41D 5521 >>			M44.03
		M 43D D869 >>			M44.02
		M 43D 6294 >>			M44.04
17	* 999 701 613 40	round seal		2	
		20 X 5			
		M >> 41D A683			M44.01
		M >> 41D 5520			M44.03
		M >> 43D D868			M44.02
		M >> 43D 6293			M44.04
17	999 701 661 40	round seal		2	
		24 X 5			
		M 41D A684 >>			M44.01
		M 41D 5521 >>			M44.03
		M 43D D869 >>			M44.02
		M 43D 6294 >>			M44.04
18	944 107 191 02	oil filler cover		1	
19	999 701 653 40	o-ring		1	
		3,53 X 44,04			
20	944 107 187 01	hose		1	
21	944 107 367 00	connecting piece		1	
(21)	944 107 367 01	connecting piece		1	(AUS)(J)
22	N 010 240 7	hexagon-head bolt		3	
		M 8 X 20			
23	900 025 007 02	washer		7	
		A 8,4			
24	944 107 201 03	oil filter		1	WW
24	944 107 201 03	oil filter		1	WW
25	944 107 149 05	housing		1	
26	944 107 165 01	oil-water radiator		1	
27	E 944 107 163 01	cover plate		1	
29	944 107 153 02	rubber ring		1	
30	944 107 147 03	gasket		1	
31	* 999 707 043 40	o-ring		2	
33	928 606 203 01	oil pressure sender		1	
34	944 107 035 11	relief valve		1	
35	999 707 145 40	o-ring		1	

Pos	Part Number	Name	Remarks	Qty	Model	Pos	Part Number	Name	Remarks	Qty	Model
35A	999 707 146 40	o-ring		1							
37	* N 043 815 3	sealing ring A 20 X 24		1							
38	900 075 029 09	hexagon-head bolt M 8 X 25		4							
39	* 900 123 106 30	sealing ring A 18 X 24		1							
40	N 016 161 1	screw plug		1							
41	999 072 005 09	hexagon-head bolt M 6 X 12		2							
42	900 249 017 02	countersunk-head screw M 6 X 25		2							
43	944 101 181 01	guide sleeve		1							
44	900 232 004 02	washer		4							
45	944 102 216 01	stud		1							
46	944 102 243 00	collar nut		1							
		- -- E N D -- -									

Model	Year	MG	SG	Illustration	Restrictions	Update			
944	85	1	05	105-00		187	10:21	07.04.2005	PORSCHE PET PORSCHE

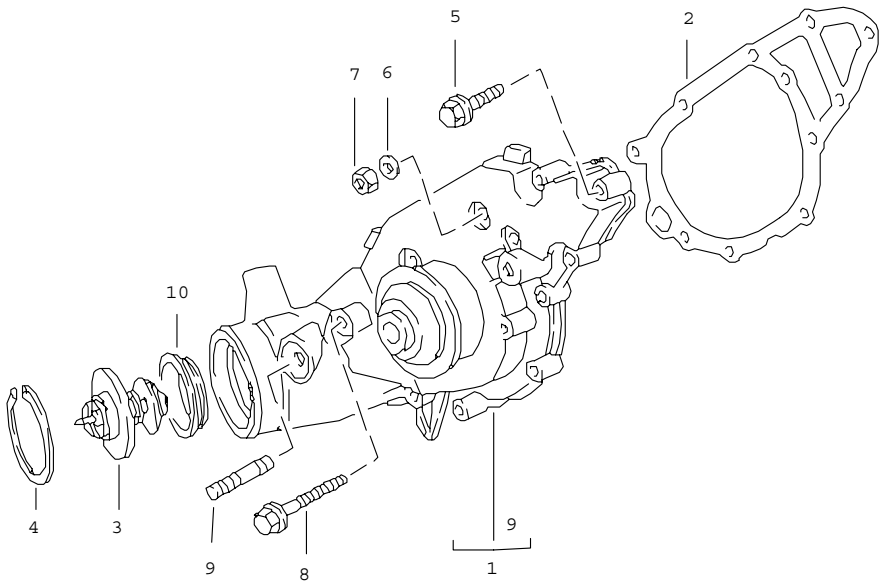

Pos	Part Number	Name	Remarks	Qty	Model
		water pump			
1	> 944 106 021 20	water pump use also: 944.105.213.01 999.084.092.02 944.105.241.03		1 1 2 1	
2	* 944 106 132 04	gasket		1	
3	944 106 129 05	thermostat		1	
4	900 042 025 01	circlip 55 X 2		1	
5	900 075 345 02	hexagon-head bolt M 6 X 35		7	
6	N 011 524 7	washer A 6,4		4	
7	900 076 010 02	hexagon nut M 6		3	
8	900 074 302 02	hexagon-head bolt M 6 X 70		1	
9	900 081 060 02	stud M 6 X 16		1	
10	951 106 155 00	sealing ring		1	
11	944 106 929 05	sealing ring		1	
		- -- E N D -- -			

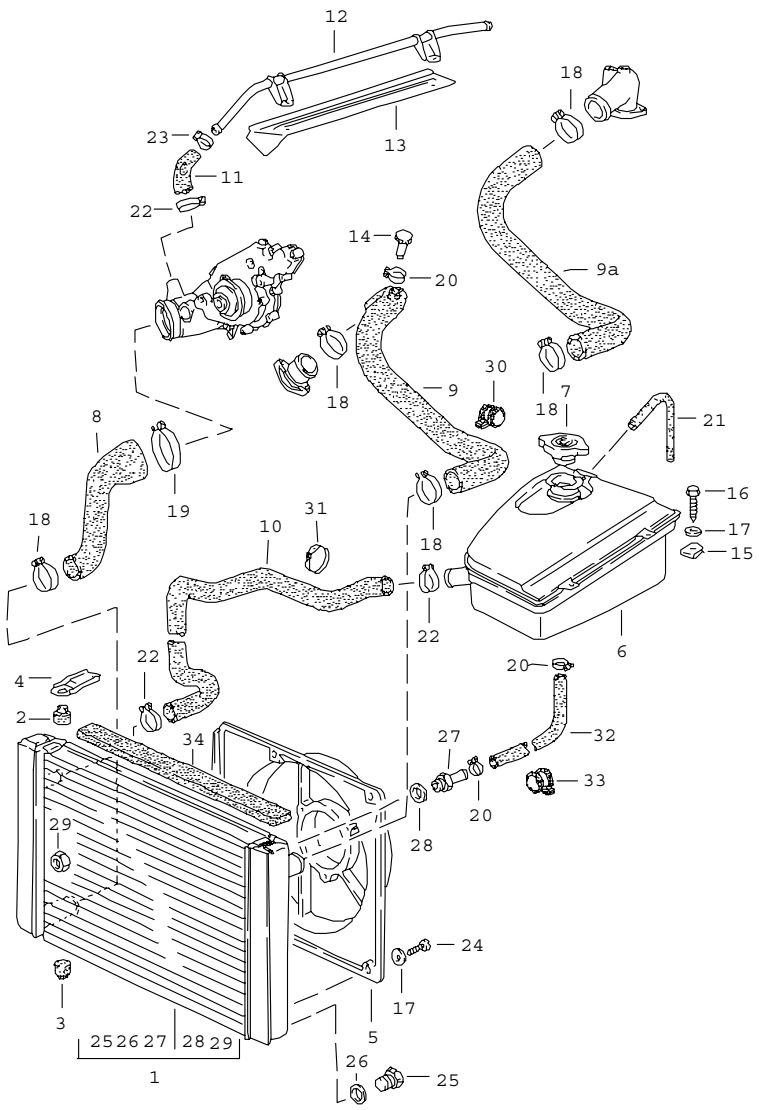

Pos	Part Number	Name	Remarks	Qty	Model
		water cooled			
1	944 106 031 01	radiator		1	
(1)	944 106 027 03	radiator	AUT.	1	
2	944 106 153 00	rubber mounting		2	
3	944 106 155 00	rubber mounting		2	
4	944 106 151 02	support		2	
5	944 106 141 02	connecting dome		1	
(5)	944 106 143 02	connecting dome air conditioner		1	
6	944 106 125 06	expansion tank		1	
7	928 106 257 03	catch		1	
8	E 944 106 237 05	water hose		1	
8	E 944 106 237 05	water hose		1	M 573
9	944 106 239 01	water hose M >> 41D 1285 M >> 41D 5164 M >> 43D 3439 M >> 43D 5517		1	 M44.01 M44.03 M44.02 M44.04
9A	944 106 239 02	water hose M 41D 1286 >> M 41D 5165 >> M 43D 3440 >> M 43D 5518 >>		1	 M44.01 M44.03 M44.02 M44.04
10	944 106 245 01	water hose		1	
11	944 106 241 03	water hose		1	
12	944 106 243 02	water tube		1	
13	944 106 247 00	cover plate	AUT.	1	
14	046 121 099	plug		1	
15	477 955 461	speed nut		2	
16	N 090 172 1	screw 6,3 X 19		2	
17	N 011 524 7	washer A 6,4		6	
18	999 512 499 00	hose clamp 32 - 50		3	

Pos	Part Number	Name	Remarks	Qty	Model
19	999 512 317 00	clip 60 - 80		1	
20	999 512 554 00	hose clamp 12 - 20		3	
21	944 106 251 00	water hose		1	
22	999 512 252 02	hose clamp 23 - 35		3	
23	999 512 346 00	hose clamp 16 - 25		1	
24	900 187 111 02	screw 6,3 X 12		4	
25	944 106 353 00	screw plug M 10 X 1		1	
26	944 106 354 00	sealing ring		1	
27	944 106 351 00	connection piece		1	
28	944 106 352 00	sealing ring		1	
29	944 106 355 00	nut	AUT.	2	
30	999 511 130 02	clip 44/20		1	
31	999 513 010 40	tie-wrap 9 X 140		2	
32	944 106 249 01	water hose		1	
33	N 020 602 1	clip B 15		1	
34	944 556 837 00	sealing rubber		1	
		- -- E N D -- -			

Pos	Part Number	Name	Remarks	Qty	Model

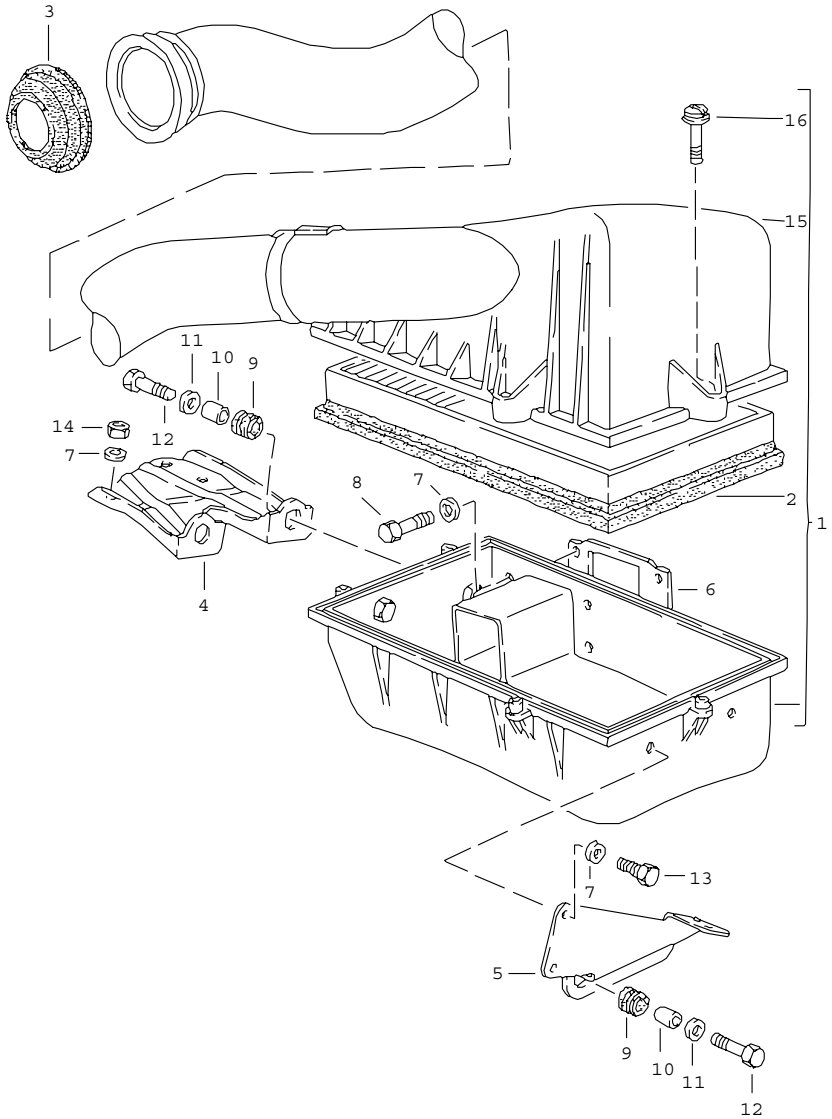

Pos	Part Number	Name	Remarks	Qty	Model
		air filter system			
1	944 110 012 06	air cleaner ready for installation		1	
2	944 110 186 02	air cleaner cartridge		1	
3	944 110 195 00	bellows		1	
4	944 110 067 00	support	/V	1	
5	944 110 155 01	support	/H	1	
6	944 110 353 00	gasket		1	
7	N 011 524 7	washer A 6,4		9	
8	N 010 305 5	hexagon-head bolt M 6 X 32		X	
8	900 074 151 02	hexagon-head bolt M 6 X 38		X	
9	056 129 669 B	grommet		4	
10	052 109 135	spacer sleeve		4	
11	N 011 612 3	washer 6,6		4	
12	900 075 014 02	hexagon-head bolt M 6 X 18		4	
13	N 010 210 13	hexagon-head bolt M 6 X 10		2	
14	900 076 010 02	hexagon nut M 6		3	
15	944 110 221 00	air cleaner cover without screw		1	
16	944 110 225 00	screw		5	
		- -- E N D -- -			

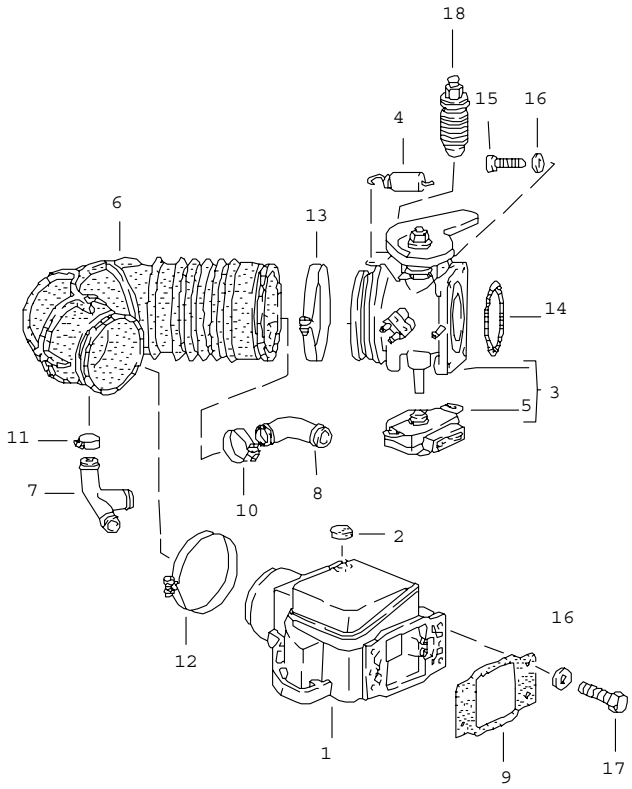

Pos	Part Number	Name	Remarks	Qty	Model
		l-jetronic 1			
1	944 606 121 00	mass air flow		1	
2	944 606 935 01	plug blue		1	
3	944 110 091 04	throttle housing		1	M44.01
3	944 110 094 01	throttle housing		1	M44.01/02 (AUS)(J)
3	944 110 093 01	throttle housing	AUT.	1	M44.03
3	944 110 095 01	throttle housing	AUT.	1	M44.03/04 (AUS)(J)
4	944 110 071 00	return spring		1	M44.01/02
4	944 110 071 01	return spring	AUT. -84	1	M44.03/04
5	944 606 113 01	throttle-valve switch		1	
6	944 110 358 04	air box		1	
7	944 110 363 02	connecting piece		1	
8	944 107 367 00	connecting piece		1	
(8)	944 107 367 01	connecting piece		1	(AUS)(J)
9	944 110 353 00	gasket		1	
10	999 512 552 00	hose clamp 25/9		1	
11	999 512 045 02	hose clamp 22/9		1	
12	999 512 235 02	hose clamp 77/9		1	
13	999 512 302 02	hose clamp 85/9		1	
14	* 999 701 468 40	round seal 67,5 X 4		1	
15	900 067 089 02	pan-head screw M 6 X 25		4	
16	N 011 524 7	washer A 6,4		8	
17	N 010 305 5	hexagon-head bolt M 6 X 32		X	

Pos	Part Number	Name	Remarks	Qty	Model	Pos	Part Number	Name	Remarks	Qty	Model
17	900 074 151 02	hexagon-head bolt M 6 X 38		X							
18	930 110 919 00	throttle screw		1							
		- -- E N D -- -									

Model	Year	MG	SG	Illustration	Restrictions	Update				
944	85	1	07	107-05		187	10:22	07.04.2005	PORSCHE	PET	PORSCHE

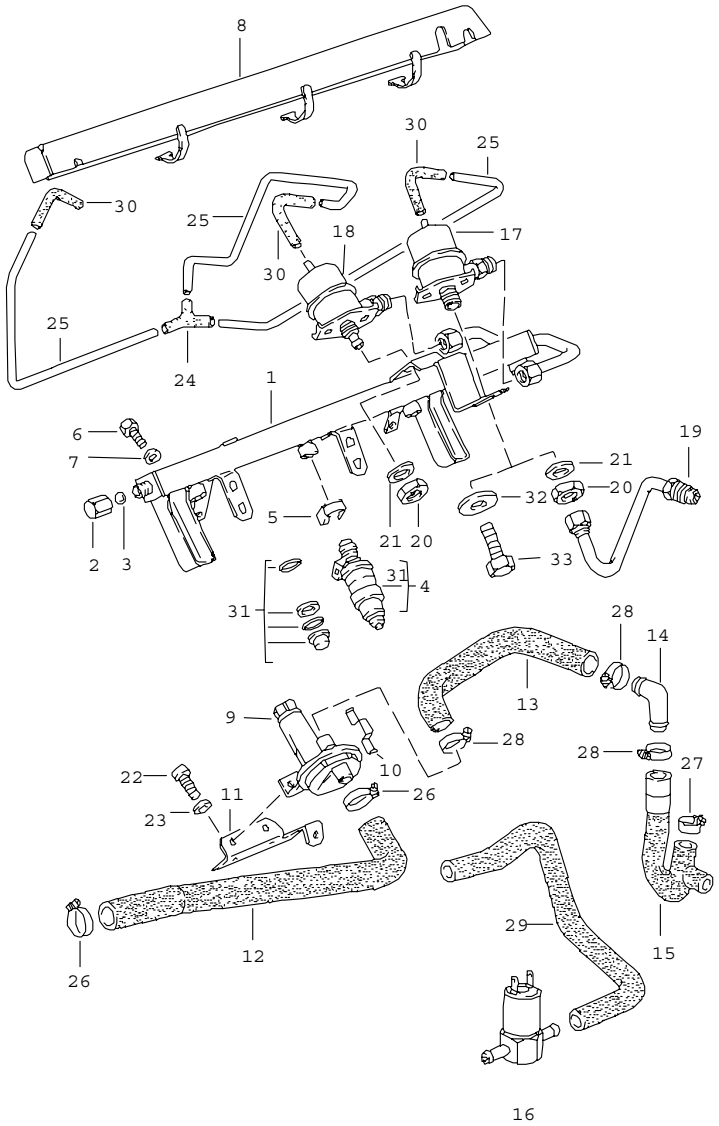

Pos	Part Number	Name	Remarks	Qty	Model
		l-jetronic 2			
1	944 110 080 04	fuel collection pipe M >> 41D C454 M >> 41D 5672 M >> 43E 00229 M >> 43E 20061		1	 M44.01 M44.03 M44.02 M44.04
(1)	944 110 080 07	fuel collection pipe M 41D C455 >> M 41D 5673 >> M 43E 00230 >> M 43E 20062 >>		1	 M44.01 M44.03 M44.02 M44.04
2	928 110 475 01	cap nut		1	
3	900 108 022 00	ball		1	
4	944 606 110 01	injector valve		4	
5	944 110 393 01	retaining clip M >> 41D C454 M >> 41D 5672 M >> 43E 00229 M >> 43E 20061		4	 M44.01 M44.03 M44.02 M44.04
(5)	930 110 388 00	retaining clip M 41D C455 >> M 41D 5673 >> M 43E 00230 >> M 43E 20062 >>		4	 M44.01 M44.03 M44.02 M44.04
6	999 072 005 09	hexagon-head bolt M 6 X 12		4	
7	N 011 524 7	washer A 6,4		4	
(8)	944 607 081 02	cover		1	
9	944 606 103 00	auxiliary air regulator		1	
10	477 133 527	retaining clip		1	
11	944 110 181 02	support		1	
12	944 110 187 01	hose		1	
13	944 110 173 00	hose		1	
14	E 944 110 184 01	connecting piece		1	
15	944 110 177 00	hose		1	M573
(15)	E 944 110 177 01	hose		1	
16	944 606 215 00	electric air valve		1	M573

Pos	Part Number	Name	Remarks	Qty	Model
17	944 110 201 03	diaphragm damper M >> 41D C454 M >> 41D 5672 M >> 43E 00229 M >> 43E 20061		1	 M44.01 M44.03 M44.02 M44.04
(17)	944 110 201 01	diaphragm damper M 41D C455 >> M 41D 5672 >> M 43E 00230 >> M 43E 20062 >>		1	 M44.01 M44.03 M44.02 M44.04
18	E 944 110 198 01	pressure regulator		1	
19	E 944 110 411 00	fuel line M >> 41D C454 M >> 41D 5672 M >> 43E 00229 M >> 43E 20061		1	 M44.01 M44.03 M44.02 M44.04
20	900 034 013 02	hexagon nut M 16		2	
21	N 012 238 5	spring washer A 16		2	
22	900 067 057 02	pan-head screw M 8 X 20		2	
23	900 025 007 02	washer A 8,4		2	
24	928 573 727 02	distributing piece		2	
-	N 020 139 1	hose 4 X 1		*	
25	-	370 MM		1	
26	999 512 045 02	hose clamp 22/9		2	
27	999 512 056 02	hose clamp 18/9		1	
28	999 512 346 00	hose clamp 20/9		3	
29	944 110 178 00	hose		1	M 573
30	928 574 717 02	hose		3	
31	944 110 901 00	set of seals for injector valve		4	
32	944 110 312 00	washer		1	
33	N 010 235 3	hexagon-head bolt M 8 X 10 - -- E N D -- -		1	

Model	Year	MG	SG	Illustration	Restrictions	Update				
944	85	1	07	107-10		187	10:23	07.04.2005	PORSCHE	PET	PORSCHE

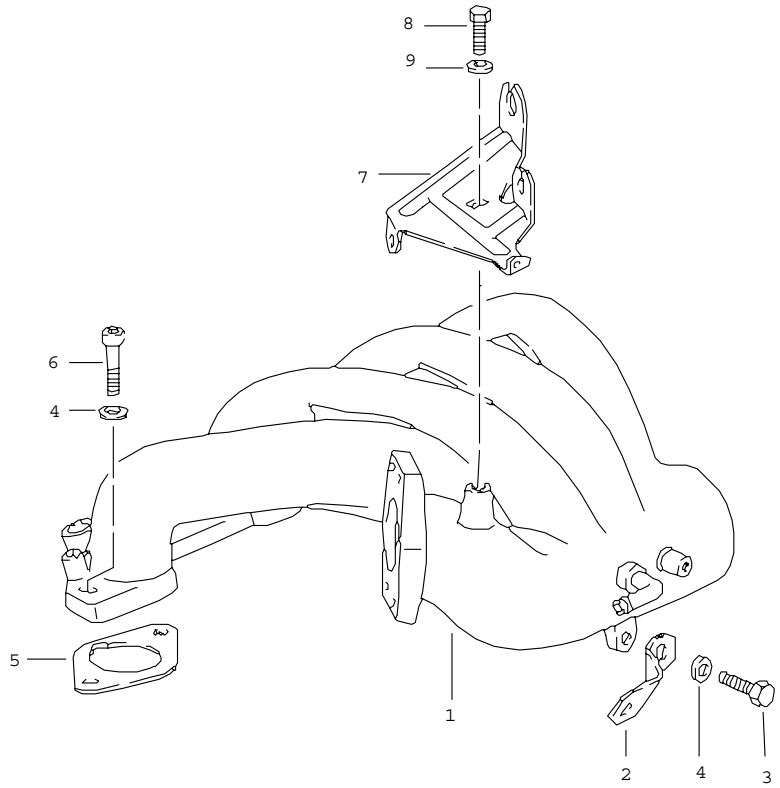

Pos	Part Number	Name	Remarks	Qty	Model
		l-jetronic 3			
1	944 110 051 09	intake manifold		1	
2	944 110 165 00	bracket		1	
(2)	944 110 165 01	bracket		1	M 657
3	900 075 085 02	hexagon-head bolt M 8 X 20		1	
4	N 011 525 13	washer 8,4		9	
5	* 944 110 163 05	gasket		4	
6	900 067 081 02	pan-head screw M 8 X 35		8	
7	E 944 110 161 04	support		1	
8	900 075 057 02	hexagon-head bolt M 6 X 16		1	
9	N 011 666 7	washer B 6,4		1	
		- -- E N D -- -			

Model	Year	MG	SG	Illustration	Restrictions	Update				
944	85	1	09	109-00		187	10:23	07.04.2005	PORSCHE	PET	PORSCHE

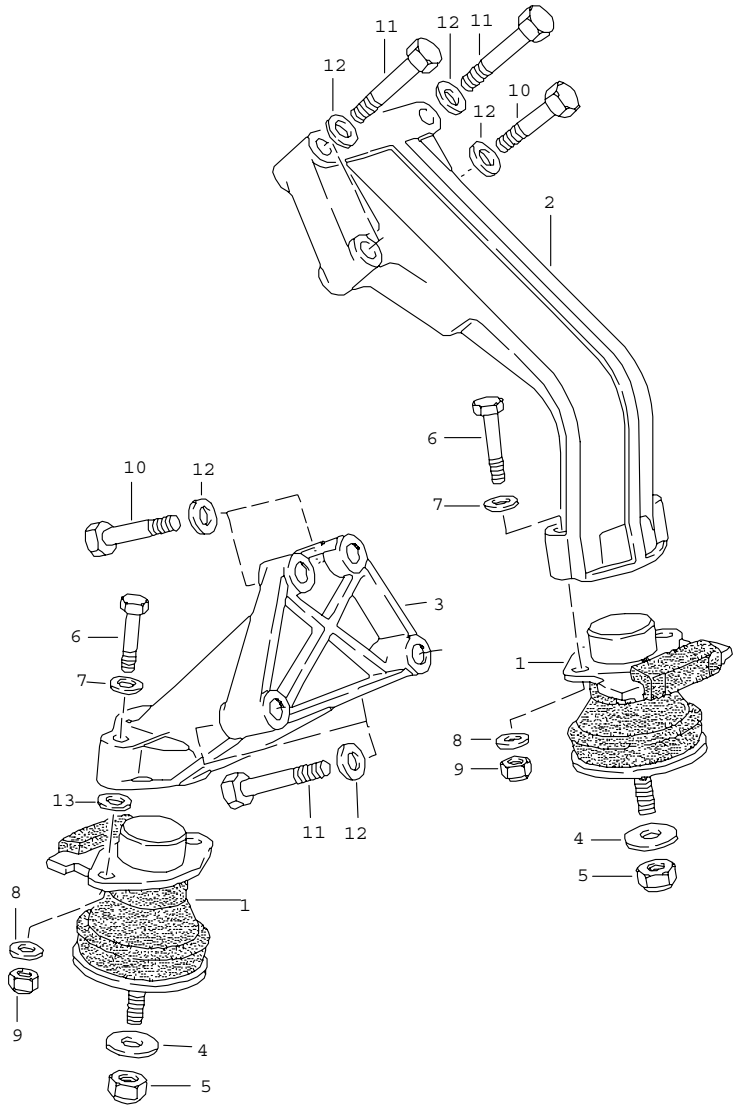

Pos	Part Number	Name	Remarks	Qty	Model
		engine suspension			
1	944 375 042 02	hydraulic mount		2	
2	944 375 123 03	engine carrier	/L	1	M 657
3	944 375 124 02	engine carrier	/R	1	
4	477 407 425	washer		2	
5	N 022 149 2	lock nut VM 10		2	
6	900 074 139 02	hexagon-head bolt M 8 X 55		4	
6	N 010 351 6	hexagon-head bolt M 8 X 52		4	
7	900 223 001 02	washer 8,4		4	
8	900 025 007 02	washer A 8,4		4	
9	900 910 022 09	lock nut VM 8		4	
10	N 010 445 3	hexagon-head bolt M 10 X 45		3	
11	N 010 455 3	screw M 10 X 55		5	
12	900 025 008 09	washer A 10,5		8	
13	999 704 143 40	washer		2	
		- -- E N D -- -			

Model	Year	MG	SG	Illustration	Restrictions	Update		
944	85	1	98	REP		187	9:35	13.04.2005

Pos	Part Number	Name	Remarks	Qty	Model
		repair kits			
>>	> 944 100 901 01	set of seals for crankcase comprising:		1	
-	999 701 614 40	round seal		2	
-	999 113 282 40	shaft seal		1	
-	999 113 281 40	shaft seal		1	
-	999 701 652 40	o-ring		2	
-	944 101 205 02	oil sump gasket		1	
-	N 043 815 3	sealing ring		2	
-	999 113 264 40	radial sealing ring		1	
-	944 105 321 00	gasket		2	
-	944 106 132 04	gasket		1	
-	999 113 268 40	shaft seal		1	
-	999 707 283 40	round seal		1	
-	944 107 136 00	sealing ring		1	
-	900 123 106 30	sealing ring		1	
-	944 107 153 02	rubber ring		1	
-	999 707 043 40	o-ring		2	
-	944 107 147 03	gasket		1	
-	999 701 613 40	round seal		2	
-	999 701 647 40	o-ring		1	
-	900 123 006 30	sealing ring		1	
-	900 123 007 30	sealing ring		1	
-	900 123 118 30	sealing ring		1	
>>	> 944 100 901 00	set of seals for cylinder head comprising:		1	
-	944 104 374 06	cylinder head gasket		1	
-	928 104 193 03	valve stem seal		8	
-	928 111 193 12	gasket		4	
-	928 105 199 12	gasket		1	
-	944 110 163 05	gasket		4	

Model	Year	MG	SG	Illustration	Restrictions	Update		
944	85	1	98	REP		187	9:35	13.04.2005

Pos	Part Number	Name	Remarks	Qty	Model
-	928 106 197 04	gasket		1	
-	944 104 311 00	gasket		1	
-	928 105 184 00	sealing ring		1	
-	999 701 602 40	o-ring		1	
-	999 113 282 40	shaft seal		1	
-	928 105 189 02	gasket		1	
-	944 105 321 00	gasket		1	
-	900 123 044 30	sealing ring		6	
-	999 701 468 40	round seal		1	
-	944 111 135 01	gasket		2	
>>	> 944 103 901 00	set of piston rings 100,00 MM		X	
>>	> 944 100 930 00	maintenance set for 20,000 km intervals comprising:		1	M44.01/03
-	944 107 201 03	oil filter		1	
-	944 110 186 02	air cleaner cartridge		1	
-	928 110 253 06	fuel filter		1	
-	900 123 118 30	sealing ring		1	
-	999 170 156 90	spark plug		4	
>>	> 944 100 930 01	maintenance parts for 15,000 km intervals comprising:		1	M44.02/04
-	944 107 201 03	oil filter		1	
-	944 110 186 02	air cleaner cartridge		1	
-	928 110 253 06	fuel filter		1	
-	900 123 118 30	sealing ring		1	
-	999 170 062 90	spark plug		4	
>>	> 944 110 901 00	set of seals for injector valve comprising: o-ring sleeve support washer		X 2 1 1	

Model	Year	MG	SG	Illustration	Restrictions	Update		
944	85	1	98	REP		187	9:35	13.04.2005

Pos	Part Number	Name	Remarks	Qty	Model
>>	> 000 043 095 00	installation set for oil level instrument comprising:		1	
-	944 612 911 01	wiring harness		1	
-	944 612 921 01	wiring harness		1	
-	944 617 150 00	relay		1	
-	944 101 033 00	cover plate		1	
-	900 075 085 02	hexagon-head bolt		2	
-	900 025 007 02	washer		2	
-	477 971 881 A	retaining bracket		1	
-	999 651 162 40	cable holder		1	
-	999 513 002 40	tie-wrap		3	
-	N 017 490 6	flat connector		1	
-	813 972 641 E	terminal sleeve housing		1	
-	813 972 641 A	terminal sleeve housing		1	
-	000 043 095 01	installation instructions		1	
		- -- E N D -- -			

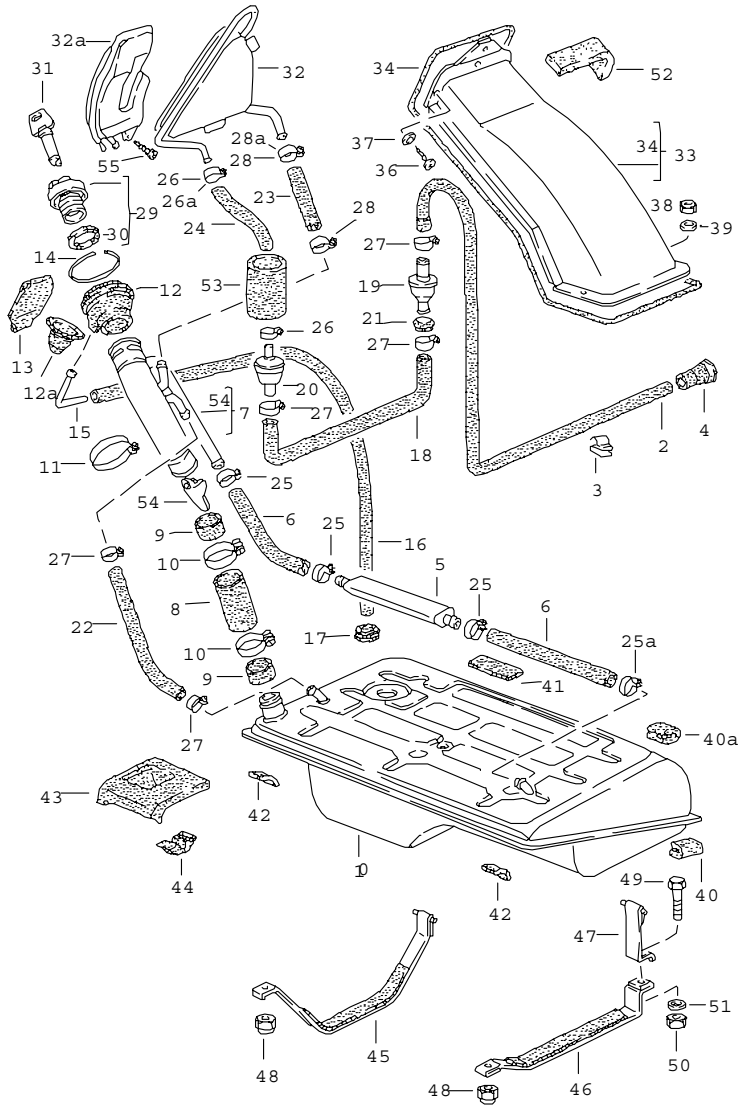

Pos	Part Number	Name	Remarks	Qty	Model
		fuel tank			
1	477 201 021 F	fuel tank		1	
2	944 201 159 01	breather hose shorten 430 MM		1	
3	477 971 939	cable terminal		4	
4	321 201 890 A	end piece		1	
5	E 477 201 035	expansion tank		1	
-	N 020 363 1	hose 15 X 2,5		*	
6	-	running meter		2	
7	944 201 039 00	filler neck		1	
7	931 201 049 01	filler neck		1	(J)
8	N 901 235 01	hose shorten 30 MM		1	
9	944 201 217 00	hose		2	
10	111 501 159 B	hose clamp		2	
11	999 513 003 40	tie-wrap		2	
12	931 201 281 01	sleeve F >>94EN4 00060		1	
12	931 201 281 02	sleeve F 94EN4 00061>>		1	
12A	944 201 461 00	grommet		1	
13	928 201 057 02	protective flap		1	
14	900 906 045 03	snap ring B 105		1	
15	477 201 283 A	connection piece		1	
16	477 201 393 A	hose		1	
17	021 119 569	rubber sleeve		1	
18	944 201 449 00	hose		1	
19	928 201 083 02	shut-off valve		1	
20	810 201 186 A	bleeder valve		1	

Pos	Part Number	Name	Remarks	Qty	Model
21	111 971 911 A	rubber sleeve		1	
-	N 020 378 1	hose 10 X 2,5		*	
22	-	270 MM		1	
-	N 020 362 1	hose 12 X 2,5		*	
23	-	80 MM	-83	1	
(23)	999 181 354 40	hose	84-	1	
-	N 020 379 1	hose 6 X 2,5		*	
24	-	285 MM	-83	1	
(24)	944 201 453 01	hose	84-	1	
25	N 024 125 2	hose clamp A 9 X 19		3	
25A	N 023 565 3	hose clamp A 9 X 21		1	
26	N 024 528 1	clip LC 8 - 12		2	
26A	999 512 160 02	hose clamp 9 X 13	84-	1	
27	N 023 570 2	hose clamp A 9 X 15		5	
28	N 023 569 2	hose clamp AR 9 X 16		2	
28A	999 512 198 02	hose clamp 9 X 17	84-	1	
29	944 201 061 01	fuel tank cap without lock cylinder		1	
30	944 201 553 00	gasket		1	
31	477 201 594	lock cylinder with 1 key state lock number		1	
31	477 201 594 A	lock cylinder with 1 key state lock number		1	
32	944 201 041 00	expansion tank	-83	1	
32A	944 201 041 03	expansion tank	84-	1	
33	944 201 047 03	cover		1	
33	944 201 047 03	cover		1	
-	000 043 202 08	packing cord		*	
34	-	$ 4 MM		1	
-	000 043 202 08	packing cord		*	
34	-	$ 6 MM		1	
36	N 013 957 5	tapping screw B 3,5 X 9,5		5	
37	900 151 028 02	washer 4,3		3	
38	N 011 005 14	hexagon nut M 5		2	
39	900 025 003 02	washer A 5,3		2	
40	481 201 647	intermediate piece		2	
40A	944 201 647 00	intermediate piece		2	
41	477 201 295 B	intermediate layer		4	
42	477 201 295 B	intermediate layer		2	
43	477 863 160	gasket		1	
43	477 863 160 A	gasket		1	(AUS)(J)
44	477 863 162 A	sound absorber		1	
45	477 201 302	restraining strap	/R	1	
46	477 201 311 B	restraining strap	/L	1	
47	477 201 395	restraining strap	/L	1	
48	311 101 463	hexagon nut M 8		2	
49	N 010 335 5	hexagon-head bolt M 8 X 35		1	
50	900 910 022 09	lock nut M 8		1	
51	N 011 525 13	washer A 8,4		1	
-	000 043 205 05	sound absorber		*	

Pos	Part Number	Name	Remarks	Qty	Model
52	-	100 MM		1	
-	999 181 046 40	insulating hose		*	
53	-	60 MM		1	
54	931 201 359 02	flap		1	
55	N 043 864 1	screw BM 3 X 6	84-	1	
		- -- E N D -- -			

Model	Year	MG	SG	Illustration	Restrictions	Update				
944	85	2	01	201-05		187	10:23	07.04.2005	PORSCHE	PET	PORSCHE

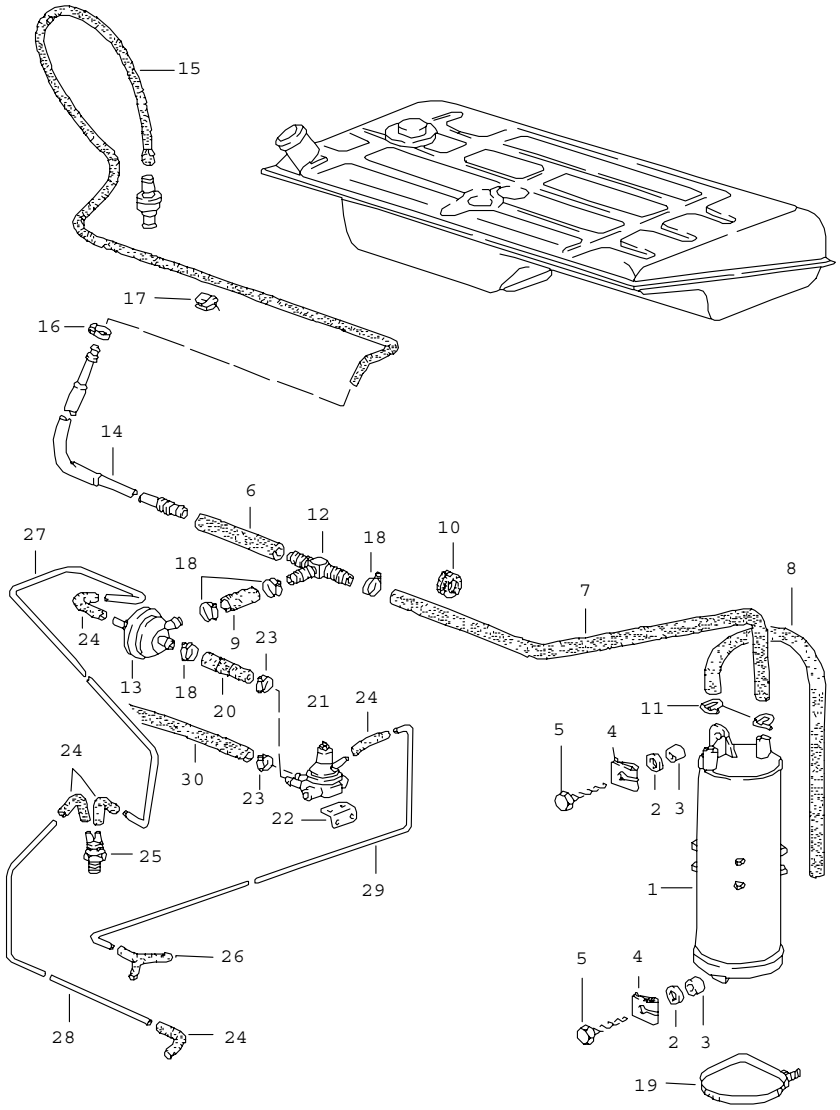

Pos	Part Number	Name	Remarks	Qty	Model
		carbon canister tank ventilation (AUS)(J)			
1	993 201 221 01	carbon canister		1	
2	900 151 029 02	washer 6,1		2	
3	477 201 279	sleeve		2	
4	N 015 433 1	speed nut B 6,3		2	
5	N 013 891 1	tapping screw B 6,3 X 19		2	
-	999 181 716 50	hose 9,5 X 15		*	
6	-	150 MM		1	
-	N 020 362 1	hose 12 X 2,5		*	
7	-	460 MM		1	
8	-	480 MM		1	
9	-	40 MM		1	
10	021 119 569 A	rubber sleeve		1	
11	999 512 265 02	hose clamp		2	
12	477 201 767 B	t-piece	-83	1	
12	477 201 767 B	t-piece	84-	1	
13	928 110 429 08	vacuum valve		1	
14	477 201 743 D	pipeline	-83	1	
14	477 201 743 D	pipeline	84-	1	
15	944 201 159 01	breather hose		1	
16	N 023 558 1	hose clamp A 9 X 10		1	
17	477 971 939	cable terminal		4	
18	999 512 346 00	hose clamp LC 16 - 25		5	
19	N 020 906 3	tie-wrap 6,5 X 450		1	

Pos	Part Number	Name	Remarks	Qty	Model	Pos	Part Number	Name	Remarks	Qty	Model
20	944 110 182 02	hose		1							
21	944 110 429 00	control valve		1							
22	944 110 366 00	retaining bracket		1							
23	999 512 160 02	hose clamp S 13/9		2							
24	928 574 717 02	hose		4							
25	058 131 851 A	thermo valve		1							
26	928 573 727 02	distributing piece									
-	N 020 139 1	hose 4 X 1		*							
27	-	850 MM		1							
28	-	480 MM		1							
29	-	580 MM		1							
-	999 181 152 50	hose 7,5 X 13,5		*							
30	-	730 MM		1							
		- -- E N D -- -									

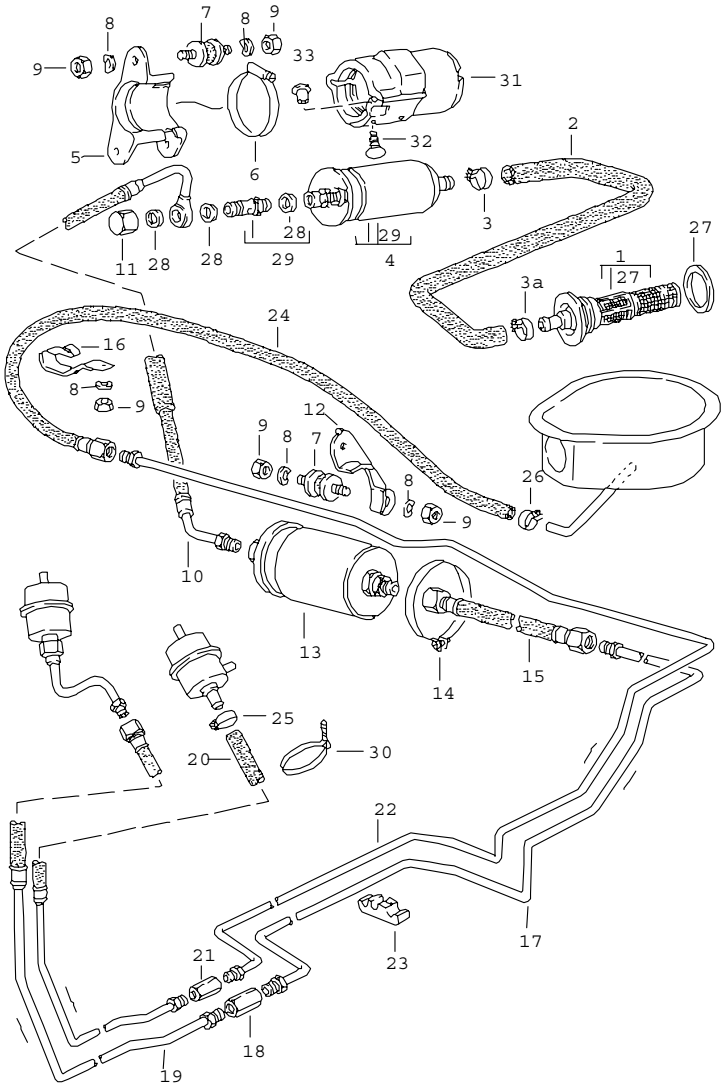

Pos	Part Number	Name	Remarks	Qty	Model
		fuel system			
1	928 201 081 04	fuel filter		1	
2	944 356 557 00	fuel hose		1	
3	N 023 526 2	hose clamp A 9 X 18		1	
3A	999 512 346 00	hose clamp A 9 X 20		1	
4	A 944 608 102 01	fuel pump		1	
4	944 608 102 04	fuel pump		1	
5	E 944 356 295 00	support		1	
6	999 512 394 00	hose clamp		1	
7	944 610 115 00	bonded rubber mounting		5	
8	N 012 226 5	spring washer A 6		10	
9	900 076 010 02	hexagon nut M 6		10	
10	944 356 041 07	fuel hose		1	
11	N 011 069 1	cap nut M 12 X 1,5		1	
12	944 356 471 01	support		1	
13	928 110 253 04	fuel filter		1	(AG)(SA)
13	928 110 253 06	fuel filter		1	
14	N 024 316 1	hose clamp A 12 X 75		1	
15	944 356 048 02	fuel hose		1	
16	944 356 593 01	support		1	
17	477 209 178 A	fuel line		1	
18	477 209 169	connecting piece		1	
19	944 356 943 00	fuel line F >>94DN4 08234		1	
(19)	944 356 943 01	fuel line F 94DN4 08235>>		1	
20	E 944 356 945 01	fuel line return		1	

Pos	Part Number	Name	Remarks	Qty	Model
21	477 209 161	connecting piece		1	
22	477 209 176 A	fuel line return		1	
23	944 356 591 00	support		12	
24	477 209 071 C	fuel hose		1	
25	N 023 577 2	hose clamp A 9 X 14		1	
26	999 512 160 02	hose clamp A 9 X 13		1	
27	928 201 187 02	sealing ring		1	
28	N 013 812 3	sealing ring A 12 X 15,5		2	
29	944 608 951 01	check valve		1	
30	N 020 902 1	tie-wrap		2	
31	944 356 297 00	cover		1	
32	999 591 825 40	catch		1	
33	999 591 826 40	catch		1	
		- -- E N D -- -			

Pos	Part Number	Name	Remarks	Qty	Model

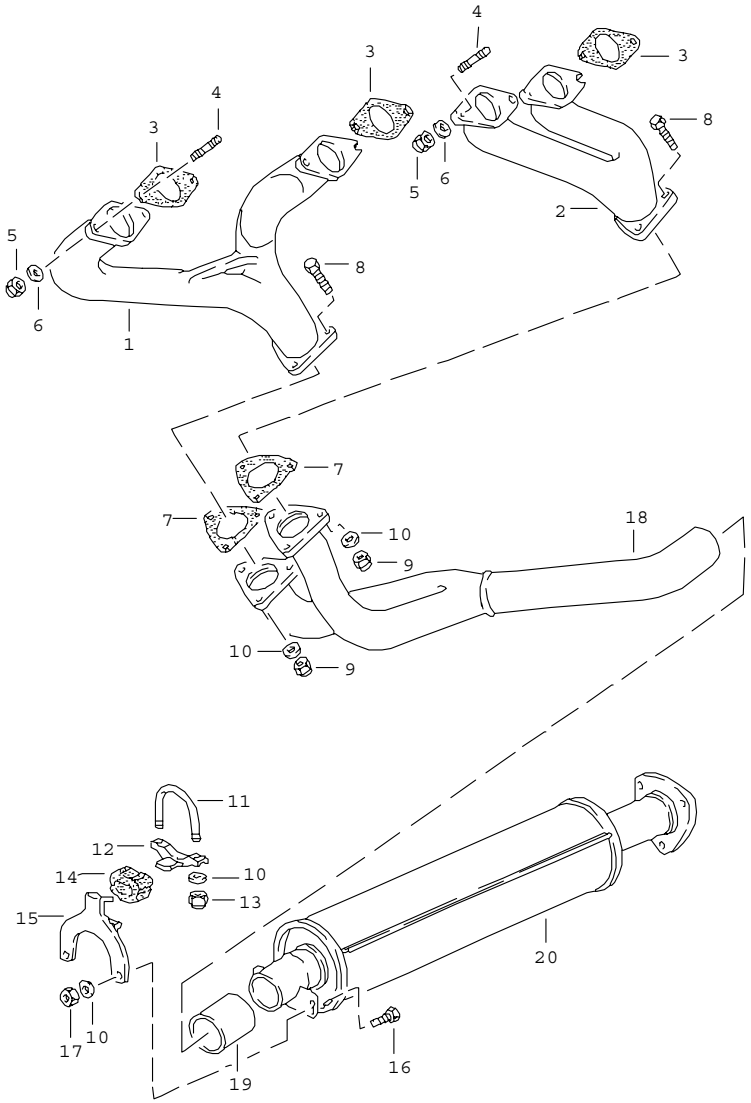

Pos	Part Number	Name	Remarks	Qty	Model
		exhaust system front muffler			
1	944 111 127 05	exhaust manifold cylinders 1 and 4		1	
2	944 111 129 04	exhaust manifold cyl. 2 and 3		1	
3	* 928 111 193 12	gasket		4	
4	999 062 044 02	stud M 8 X 30		8	
5	999 084 052 02	lock nut M 8		8	
6	928 111 181 00	washer		8	
7	* 944 111 135 01	gasket		2	
8	900 074 287 02	hexagon-head bolt M 8 X 35		6	
9	N 022 008 4	lock nut VM 8		6	
10	N 011 525 13	washer A 8,4		8	
11	477 253 139	clip		1	
12	944 111 307 00	support		1	
13	900 910 097 02	lock nut VM 8		2	
14	477 253 140 A	rubber mounting		1	
15	931 111 061 02	hook		1	
16	N 010 240 16	hexagon-head bolt M 8 X 20		2	
17	900 076 025 02	hexagon nut M 8		2	
18	944 111 983 00	exhaust pipe		1	
19	944 111 981 00	sleeve		1	
20	944 111 985 00	front muffler		1	
		cover plate see group 8/01/05			
		- -- E N D -- -			

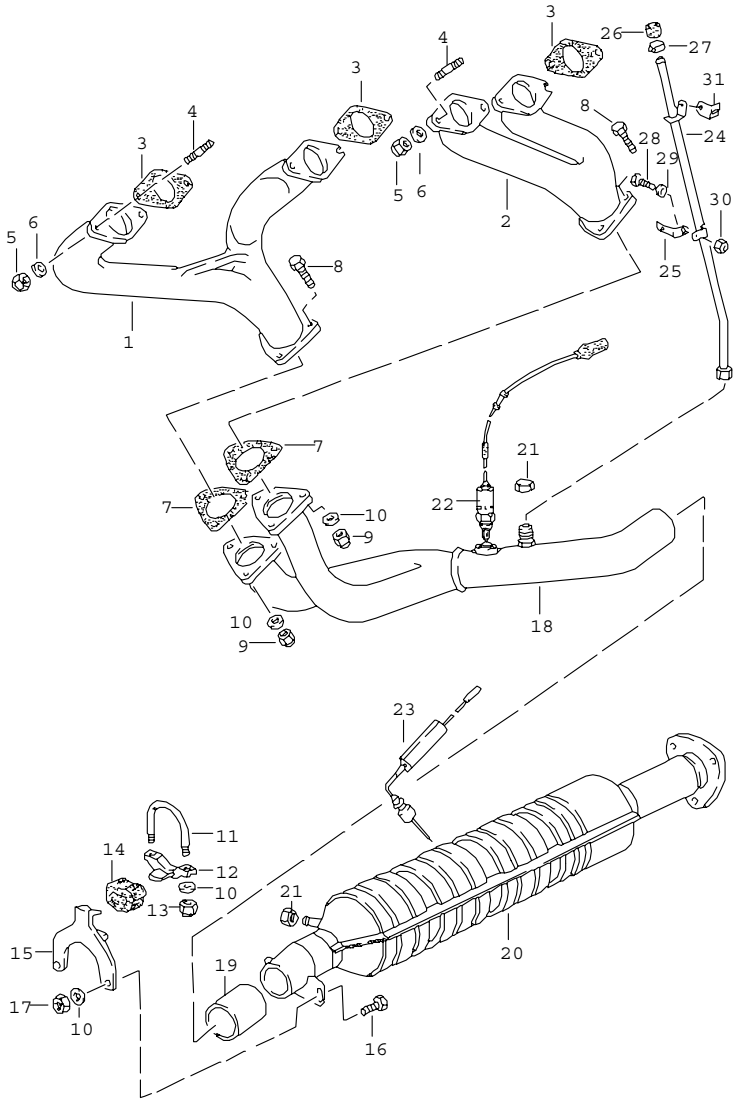

Pos	Part Number	Name	Remarks	Qty	Model
		exhaust system catalytic converter (J)			
1	944 111 127 05	exhaust manifold cylinders 1 and 4		1	
2	944 111 129 04	exhaust manifold cyl. 2 and 3		1	
3	* 928 111 193 12	gasket		4	
4	999 062 044 02	stud M 8 X 30		8	
5	999 084 052 02	lock nut M 8		8	
6	928 111 181 00	washer		8	
7	* 944 111 135 01	gasket		2	
8	900 074 287 02	hexagon-head bolt M 8 X 35	84-	6	
9	N 022 008 4	lock nut VM 8		6	
10	N 011 525 13	washer A 8,4		8	
11	477 253 139	clip		1	
12	944 111 307 00	support		1	
13	900 910 097 02	lock nut VM 8		2	
14	477 253 140 A	rubber mounting		1	
15	931 111 061 02	hook		1	
16	N 010 240 16	hexagon-head bolt M 8 X 20		2	
17	900 076 025 02	hexagon nut M 8		2	
18	944 111 987 03	exhaust pipe		1	
19	944 111 981 00	sleeve		1	
20	944 111 991 01	catalytic converter	83	1	
20	944 111 991 01	catalytic converter	84-	1	
21	930 113 153 00	cap		1	

Pos	Part Number	Name	Remarks	Qty	Model	Pos	Part Number	Name	Remarks	Qty	Model
22	944 606 133 00	oxygen sensor		1	(J)						
23	944 606 019 00	temperature sensor		1							
24	944 111 175 04	exhaust emission tube		1							
25	944 111 177 02	support		1							
26	035 133 335 B	cap		1							
27	999 512 160 02	hose clamp		1							
28	999 072 005 09	hexagon-head bolt M 6 X 12		1							
29	N 011 524 7	washer A 6,4		1							
30	900 076 010 02	hexagon nut M 6		1							
31	944 111 179 00	support		1							
		cover plate see group 8/01/05									
		- -- E N D -- -									

Model	Year	MG	SG	Illustration	Restrictions	Update	10:24	07.04.2005	PORSCHE PET PORSCHE
944	85	2	02	202-10		187			

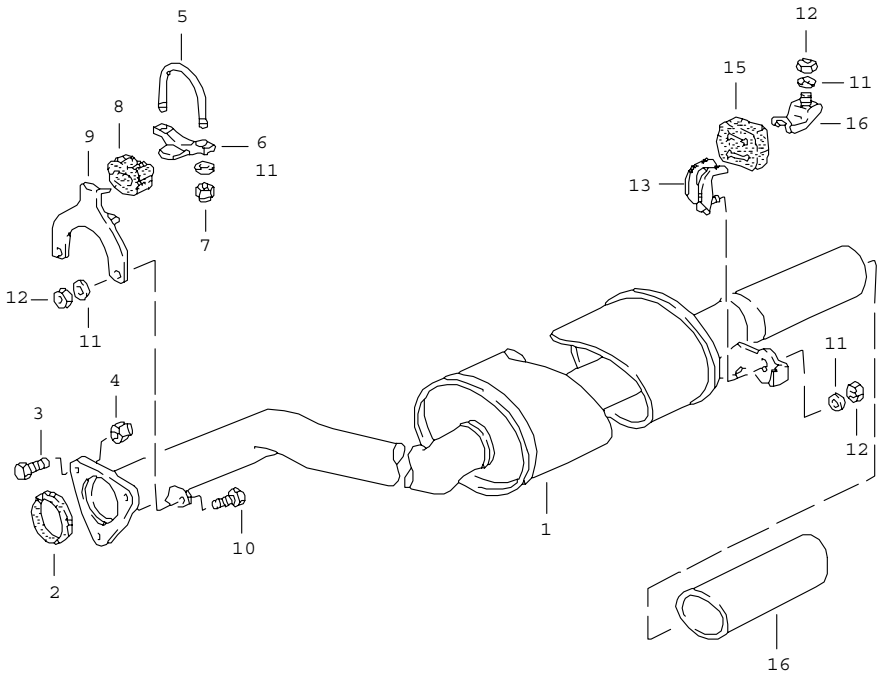

Pos	Part Number	Name	Remarks	Qty	Model
		exhaust system rear muffler			
1	944 111 083 01	rear muffler		1	
(1)	944 111 084 00	rear muffler		1	(S)
2	944 111 203 00	sealing ring		1	
3	900 074 287 02	hexagon-head bolt M 8 X 35		3	
4	N 022 008 4	lock nut VM 8		3	
5	477 253 139	clip		1	
6	944 111 307 00	support		1	
7	900 910 097 02	lock nut VM 8		2	
8	477 253 140 A	bearing		1	
9	931 111 061 02	hook		1	
10	N 010 240 16	hexagon-head bolt M 8 X 20		2	
11	N 011 525 13	washer A 8,4		7	
12	900 076 025 02	hexagon nut M 8		6	
13	931 111 264 01	hook		2	
13	944 111 064 00	hook with trailer coupling		2	
14	931 111 121 01	hook		2	
15	928 111 259 02	rubber mounting		2	
16	477 253 191 C	ornamental exhaust pipe chrome		1	
16	477 253 191 D	ornamental exhaust pipe black		1	
		cover plate see group 8/01/05			
		- -- E N D -- -			

Model	Year	MG	SG	Illustration	Restrictions	Update		
944	85	2	98	REP		187	9:38	13.04.2005

Pos	Part Number	Name	Remarks	Qty	Model
		repair kits			
>>	> 944 113 911 00	reconstruction set for subsequent installat. catalytic converter comprising:		1	
-	000 043 059 00	installation instructions		1	
-	944 111 081 05	catalytic converter		1	
-	944 111 135 01	gasket		2	
-	944 111 203 00	sealing ring		1	
-	900 074 287 02	hexagon-head bolt		9	
-	N 011 525 13	washer		6	
-	N 022 008 4	lock nut		9	
-	944 606 135 00	oxygen sensor		1	
-	944 423 193 01	support		1	
-	N 020 680 1	clamp		1	
-	N 010 207 6	hexagon-head bolt		1	
-	N 012 225 2	spring washer		1	
-	N 011 005 14	hexagon nut		1	
-	951 504 869 00	cover plate		1	
-	999 591 485 02	speed nut		4	
-	N 090 239 1	screw		4	
-	944 111 175 02	exhaust emission tube		1	
-	944 111 177 02	support		1	
-	944 111 179 00	support		1	
-	999 072 005 09	hexagon-head bolt		2	
-	N 011 524 7	washer		2	
-	900 076 010 02	hexagon nut		2	
-	035 133 335 B	cap		1	
-	999 512 160 02	hose clamp		1	
-	944 701 201 02	sticker		1	
-	944 201 901 00	sleeve		1	
-	944 612 002 06	wiring harness		1	

Model	Year	MG	SG	Illustration	Restrictions	Update		
944	85	2	98	REP		187	9:38	13.04.2005

Pos	Part Number	Name	Remarks	Qty	Model
-	999 513 002 40	tie-wrap		10	
-	944 618 121 04	control unit		1	
-	944 606 121 01	mass air flow		1	
-	928 110 201 01	sealing frame		1	
-	N 011 524 7	washer		4	
-	900 074 220 02	screw		4	
-	951 101 327 01	heat protection plate		1	
		- -- E N D -- -			

Model	Year	MG	SG	Illustration	Restrictions	Update				
944	85	3	01	301-00		187	10:25	07.04.2005	PORSCHE	PET	PORSCHE

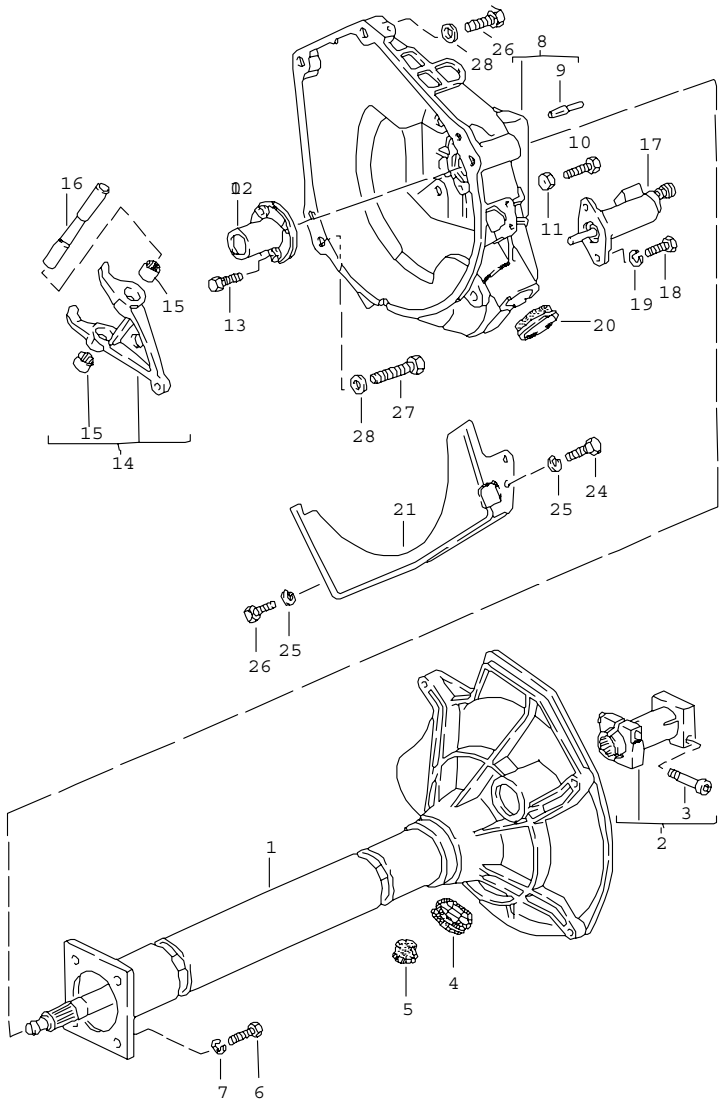

Pos	Part Number	Name	Remarks	Qty	Model
		central tube for manual transmission			
1	> 944 421 012 02	central tube		1	
2	922 421 051 02	clamping sleeve		1	
3	931 421 240 00	clamping screw		2	
4	477 521 277 C	cap		1	
5	477 521 177	cap		1	
6	N 010 275 4	hexagon-head bolt M 10 X 35		4	
7	N 012 028 1	lock ring 10		4	
8	944 116 043 06	clutch housing		1	
9	N 012 690 1	grooved pin 10 X 32		3	
10	N 010 221 3	hexagon-head bolt M 6 X 35		1	
11	900 076 010 02	hexagon nut M 6		1	
12	016 141 181	guide sleeve		1	
13	N 090 194 2	hexagon-head bolt M 7 X 16		3	
14	931 116 085 00	clutch release lever		1	
15	999 201 213 00	needle sleeve		2	
16	951 116 133 00	operating shaft		1	
17	944 116 237 00	clutch operating cylinder		1	
-	* 928 116 901 00	repair kit clutch operating cylinder		1	
18	N 010 233 6	hexagon-head bolt M 8 X 28		2	
19	N 012 038 1	lock ring B 8		2	
20	931 116 177 00	cap		1	
21	944 116 093 01	protective plate		1	

Pos	Part Number	Name	Remarks	Qty	Model	Pos	Part Number	Name	Remarks	Qty	Model
24	N 010 254 6	hexagon-head bolt M 10 X 25		2							
25	N 012 028 1	lock ring A 10		2							
26	N 010 142 2	hexagon-head bolt M 12 X 50		2							
27	N 010 191 2	hexagon-head bolt M 12 X 95		2							
28	N 011 531 7	washer A 13		4							
		- -- E N D -- -									

Model	Year	MG	SG	Illustration	Restrictions	Update			
944	85	3	01	301-05		187	10:25	07.04.2005	PORSCHE PET PORSCHE

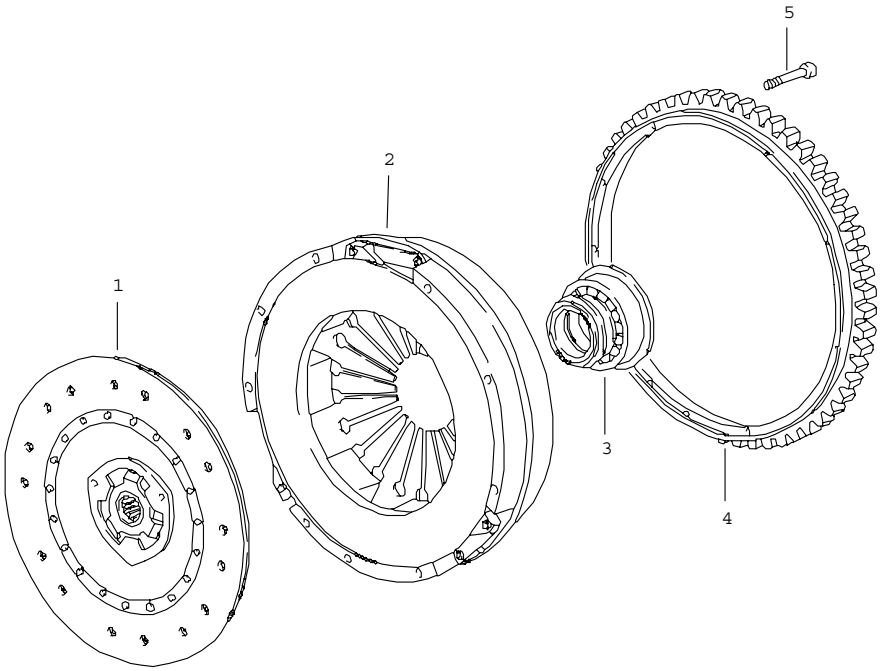

Pos	Part Number	Name	Remarks	Qty	Model
		clutch			
1	944 116 012 08	clutch plate		1	M44.01/02
2	> 944 116 023 01	pressure plate		1	M44.01/02
3	931 116 082 04	clutch release bearing		1	
4	944 116 239 03	starter ring		1	
5	900 067 020 02	pan-head screw M 8 X 50		9	
-	944 116 911 00	repair kit for clutch		1	
		- -- E N D -- -			

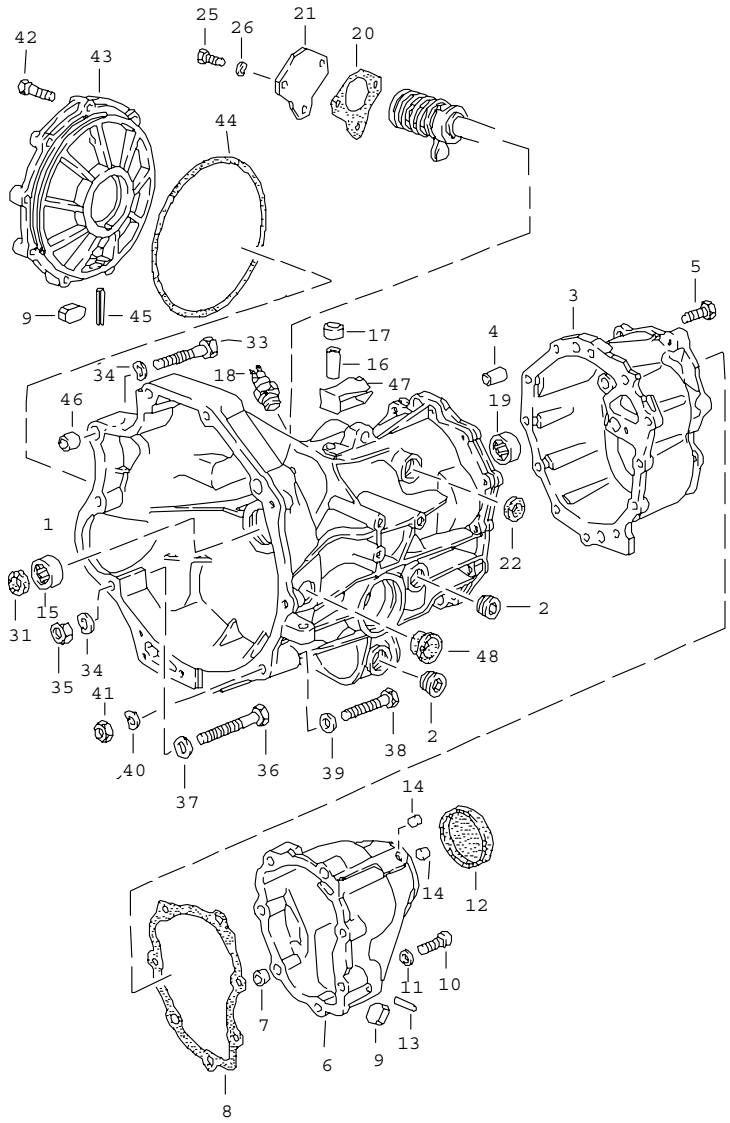

Pos	Part Number	Name	Remarks	Qty	Model
		replacement transmission transmission case manual transmission			
		replacement transmission (J) QL will be replaced by QM			
		4M will be replaced by 8Q			
-	> 016 300 045 C	replacement transmission		1	QK
-	> 016 300 045 E	replacement transmission		1	QM QL
-	016 300 045 Q	replacement transmission with limited-slip differential		1	7Q
-	016 300 045 P	replacement transmission with limited-slip differential		1	8Q 4M
1	016 301 103 AF	transmission case		1	
2	111 301 127 E	screw plug M 24 X 1,5		2	
3	016 301 211 F	end plate see tpi GR. 3/1		1	
4	014 301 473	guide sleeve		2	
5	N 010 332 4	hexagon-head bolt M 8 X 32		8	
(5)	N 010 369 2	hexagon-head bolt M 8 X 58		4	
6	016 301 231 F	cover use also: 2X 019.301.115		1	
7	016 301 299	dowel sleeve		2	
8	* 016 301 235 C	gasket		1	
9	084 301 143 A	magnet		2	
10	N 014 715 1	pan-head screw M 8 X 45		7	
11	900 031 001 02	washer 8,4		7	

Model	Year	MG	SG	Illustration	Restrictions	Update				
944	85	3	02	302-00		187	10:25	07.04.2005	PORSCHE	PET	PORSCHE

Pos	Part Number	Name	Remarks	Qty	Model
12	088 301 467 B	cover		1	
13	N 013 371 1	straight pin 6 M 6 X 24		1	
14	019 301 115	plug		2	
15	083 311 123 TPP	needle sleeve		1	
16	014 301 473	guide sleeve		1	
17	014 301 485	cap		1	
18	084 941 521	switch		1	
19	088 311 123	needle sleeve		1	
20	* 016 301 455 A	gasket		1	
21	016 301 453 B	cover		1	
22	* 928 303 120 01	shaft seal		1	
25	900 075 193 08	hexagon-head bolt M 6 X 16		3	
26	N 012 226 5	spring washer B 6		3	
31	* 088 311 113	sealing ring		1	
32	N 090 194 2	hexagon-head bolt M 7 X 16		3	
33	N 010 183 1	hexagon-head bolt M 12 X 75		2	
34	900 028 014 02	spring washer B 12		3	
35	N 011 020 8	hexagon nut M 12		1	
36	N 010 185 3	hexagon-head bolt M 12 X 80		1	
37	N 011 531 7	washer A 13		1	
38	N 010 460 2	hexagon-head bolt M 10 X 60		1	
39	N 011 527 2	washer A 10,5		1	
40	N 012 230 6	spring washer B 10		1	
41	N 011 010 13	hexagon nut M 10		1	
42	N 090 191 1	hexagon-head bolt M 8 X 35		7	
43	088 409 131 C	cover		1	
44	* 113 301 185 A	sealing ring G >> QK 16 04 4 G >> 7Q 16 04 4 G >> QL 16 04 4 G >> 4M 16 04 4 G >> QM 16 04 4 G >> 8Q 16 04 4		1	
45	N 013 291 1	tensioning sleeve		1	
46	019 301 153	dowel sleeve		2	
47	016 301 349	cover plate		1	
48	477 521 177	cap		1	
		- -- E N D -- -			

Model	Year	MG	SG	Illustration	Restrictions	Update				
944	85	3	03	303-00		187	10:25	07.04.2005	PORSCHE	PET	PORSCHE

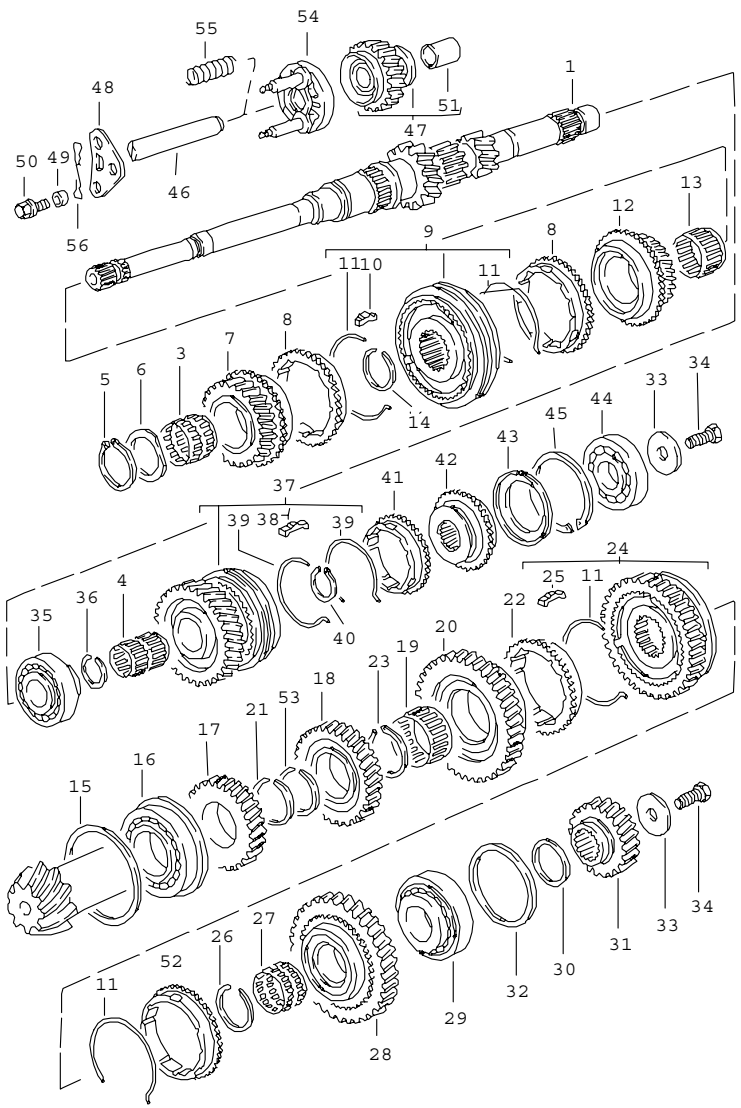

Pos	Part Number	Name	Remarks	Qty	Model
		gears and shafts manual transmission			
1	016 311 105 S	drive shaft		1	
3	016 311 115	needle-roller bearing 4th speed		1	
4	016 311 116 A	needle-roller bearing 5th speed		1	
5	088 311 287	circlip 1,65		1	
(5)	088 311 287 B	circlip 1,75		X	
5	016 311 344	circlip together with drive shaft 016.311.105.S		1	
6	088 311 155 A	thrust washer		1	
7	016 311 351 B	shifting gear 4th speed		1	
8	088 311 295 B	synchroniser ring 3rd, 4th speed		2	
9	088 311 301 B	synchronising hub 3rd, 4th speed with operating sleeve		1	
10	088 311 245	detent 3rd, 4th speed		3	
11	088 311 311 D	spring 1st gear 4th speed		4	
12	005 311 285	shifting gear 3rd speed		1	
13	016 311 213 H	needle-roller bearing 3rd speed		1	
14	088 311 317	circlip 1,50		1	
(14)	088 311 317 B	circlip 1,56		X	
(14)	088 311 317 C	circlip 1,62		X	

Pos	Part Number	Name	Remarks	Qty	Model
15	088 311 391	shim 0,20		1	
(15)	088 311 391 A	shim 0,25		X	
(15)	088 311 391 B	shim 0,30		X	
(15)	088 311 391 C	shim 0,35		X	
(15)	088 311 391 D	shim 0,40		X	
(15)	088 311 391 E	shim 0,65		X	
(15)	088 311 391 F	shim 0,90		X	
(15)	088 311 391 G	shim 1,15		X	
16	016 311 220 E	taper roller bearing		1	
17	016 311 149 F	gear wheel 4th speed G >> QK 03 08 2 G >> QL 03 08 2		1	
17	016 311 149 H	gear wheel 4th speed G QK 04 08 2 >> G QL 04 08 2 >>		1	
18	016 311 131 D	gear wheel 3rd speed G >> QK 03 08 2 G >> QL 03 08 2		1	
18	016 311 131 E	gear wheel 3rd speed G QK 04 08 2 >> G QL 04 08 2 >>		1	
19	016 311 229 A	needle-roller bearing 2nd gear		1	
20	016 311 271	shifting gear 2nd gear circlip G >> QK 03 08 2 G >> QL 03 08 2		1	

Pos	Part Number	Name	Remarks	Qty	Model
21	016 311 363	circlip 2,24		1	
(21)	016 311 363 A	circlip 2,26		X	
(21)	016 311 363 B	circlip 2,28		X	
(21)	016 311 363 C	circlip 2,30		X	
(21)	016 311 363 D	circlip 2,32		X	
(21)	016 311 363 E	circlip 2,34		X	
(21)	016 311 363 F	circlip 2,36		X	
(21)	016 311 363 G	circlip 2,38		X	
(21)	016 311 363 H	circlip 2,40		X	
		circlip G QK 04 08 2 >> G QL 04 08 2 >>			
21	016 311 363 AA	circlip 2,24		1	
(21)	016 311 363 AB	circlip 2,26		X	
(21)	016 311 363 AC	circlip 2,28		X	
(21)	016 311 363 AD	circlip 2,30		X	
(21)	016 311 363 AE	circlip 2,32		X	
(21)	016 311 363 AF	circlip 2,34		X	
(21)	016 311 363 AG	circlip 2,36		X	
(21)	016 311 363 AH	circlip 2,38		X	
(21)	016 311 363 AJ	circlip 2,40		X	

Pos	Part Number	Name	Remarks	Qty	Model
22	016 311 295	synchroniser ring 2nd gear		1	
23	016 311 287	circlip 1,65		1	
(23)	016 311 287 A	circlip 1,70		X	
(23)	016 311 287 B	circlip 1,75		X	
24	016 311 239 E	synchronising hub 1st/2nd gear with operating sleeve		1	
25	088 311 313	detent 1st/2nd gear		3	
26	016 311 327	circlip 1,50		1	
(26)	016 311 327 A	circlip 1,55		X	
(26)	016 311 327 B	circlip 1,60		X	
27	016 311 207 A	needle-roller bearing 1st gear		1	
28	016 311 257	shifting gear 1st gear		1	
29	E 016 311 375 B	taper roller bearing		1	
30	016 311 391	adjusting shim 1,10		1	
(30)	016 311 391 A	adjusting shim 1,40		X	
(30)	016 311 391 B	adjusting shim 1,70		X	
(30)	016 311 391 C	adjusting shim 2,00		X	
(30)	016 311 391 D	adjusting shim 2,30		X	
31	016 311 159 C	gear wheel 5th speed		1	QK
32	016 311 393	shim 0,24		1	
(32)	016 311 393 A	shim 0,27		X	
(32)	016 311 393 B	shim 0,30		X	
(32)	016 311 393 C	shim 0,33		X	
(32)	016 311 393 D	shim 0,36		X	
(32)	016 311 393 E	shim 0,39		X	
(32)	016 311 393 F	shim 0,42		X	
(32)	016 311 393 G	shim 0,45		X	
(32)	016 311 393 H	shim 0,69		X	
(32)	016 311 393 J	shim 0,93		X	
(32)	016 311 393 K	shim 1,17		X	
(32)	016 311 393 L	shim 1,41		X	
33	N 902 582 01	clamping screw		2	
34	N 902 582 01	clamping screw M 10 X 22		2	
35	016 311 427	cylindrical-roller bearing		1	
36	N 900 606 01	circlip A 27 X 1,35		1	
(36)	N 900 606 02	circlip A 27 X 1,40		X	
(36)	N 900 606 03	circlip A 27 X 1,45		X	
37	016 311 353 B	shifting gear 5th speed		1	QK
(37)	016 311 353 E	shifting gear 5th speed		1	QL
38	016 311 246	detent 5th speed		3	

Pos	Part Number	Name	Remarks	Qty	Model	Pos	Part Number	Name	Remarks	Qty	Model
39	014 311 311 C	spring 5th speed		2							
40	N 900 607 01	circlip A 27 X 1,9		1							
41	014 311 295 E	synchroniser ring 5th speed		1							
42	016 311 192 A	clutch hub 5th speed		1							
43	016 311 449	dust plate		1							
44	016 311 445	four-point bearing		1							
45	N 900 608 01	circlip A 68 X 2,83		1							
(45)	N 900 608 02	circlip A 68 X 2,90		X							
46	016 311 519 B	reverse idler gear shaft		1							
47	016 311 529 D	reverse idler gear		1							
48	016 311 853 B	retainer plate		1							
49	088 301 291 A	shouldered bolt		1							
50	088 301 291 A	shouldered bolt M 8 X 16		1							
51	088 311 533	bush		1							
52	016 311 247	synchroniser ring 1st gear		1							
53	016 311 363 H	circlip 2,40 G >> QK 03 08 2 G >> QL 03 08 2		1							
53	016 311 363 AJ	circlip 2,40 G QK 04 08 2 >> G QL 04 08 2 >>		1							
54	016 311 839 C	synchroniser ring		1							
55	016 311 859 C	compression spring		1							
56	016 311 861 C	spring		1							
		- -- E N D -- -									

Model	Year	MG	SG	Illustration	Restrictions	Update				
944	85	3	04	304-00		187	10:26	07.04.2005	PORSCHE	PET	PORSCHE

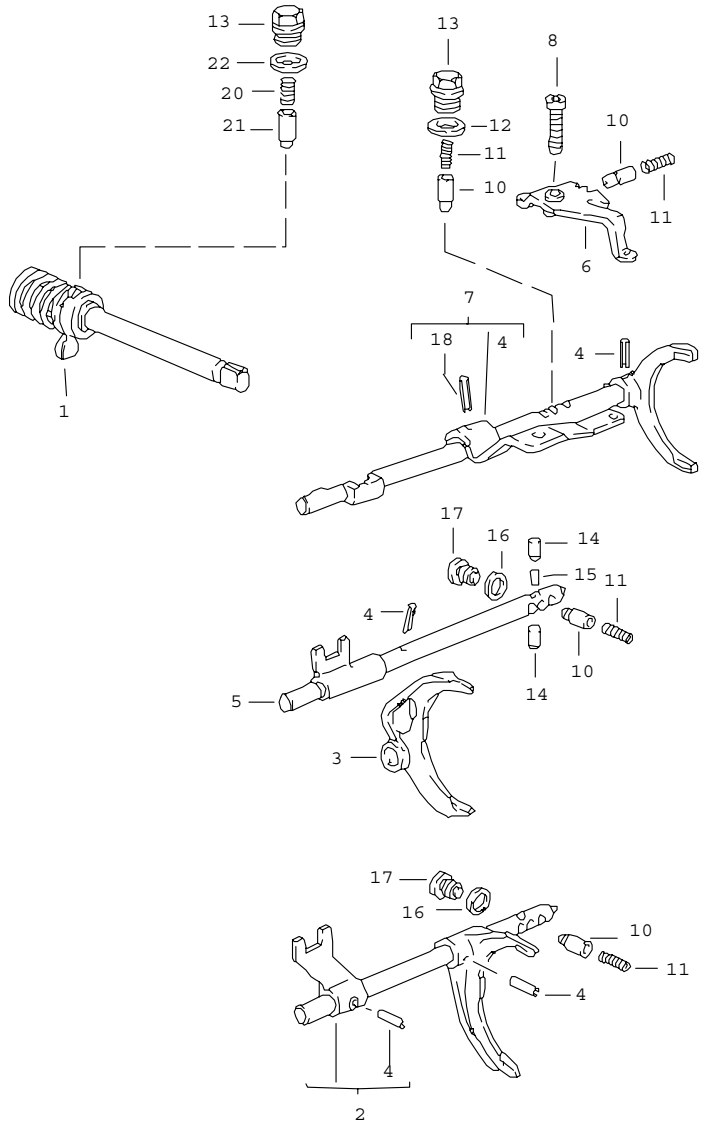

Pos	Part Number	Name	Remarks	Qty	Model
		shift rods forks			
1	016 311 475 G	shift rod ready for installation		1	
2	016 311 549 A	shift fork 1st/2nd gear		1	
3	016 311 561 A	shift fork 3rd, 4th speed		1	
4	N 900 073 01	tensioning sleeve 6 X 22		4	
5	016 311 567	gear shift rod 3rd, 4th speed		1	
6	016 311 573 B	reverse lever		1	
7	016 311 575 C	gear shift rod 5th speed and reverse gear		1	
8	084 311 589 B	pan-head screw M 10 X 32		1	
10	084 311 621 D	bush		4	
11	014 311 641 A	compression spring		4	
12	900 123 140 30	sealing ring A 18 X 22		1	
13	005 311 689	screw plug		1	
14	014 311 629	detent		2	
15	014 311 635	intermediate piece		1	
16	* 088 311 599	sealing ring		2	
17	088 311 721	stop screw		2	
18	N 013 336 1	tensioning sleeve 6 X 26		1	
20	016 311 735 A	compression spring		1	
21	016 311 717 C	bush		1	
22	* 005 311 599	sealing washer		1	
		- -- E N D -- -			

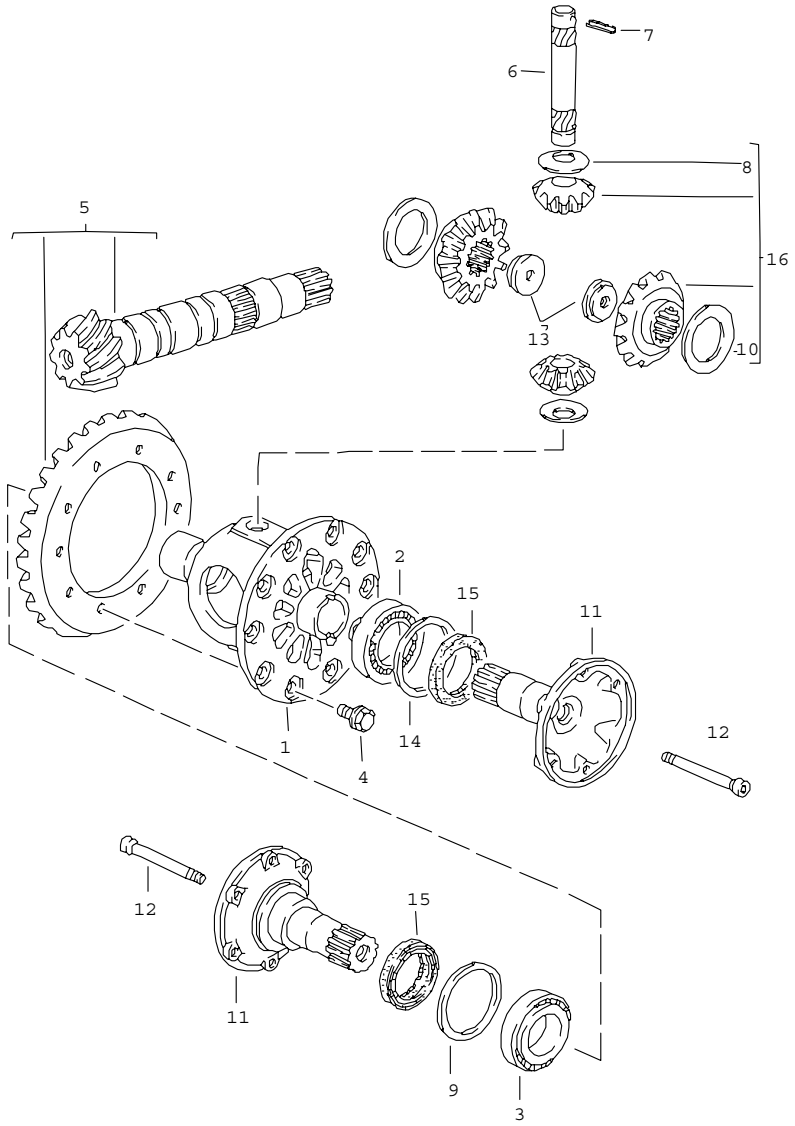

Pos	Part Number	Name	Remarks	Qty	Model
		differential for manual transmission			
1	088 409 121 B	differential housing		1	
2	016 409 123	taper roller bearing	/L	1	
3	113 517 185 C	taper roller bearing	/R	1	
4	088 409 135 A	hexagon-head bolt M 10 X 18		10	
5	016 409 143 BG	ring gear and pinion shaft 9 : 35 G >> QK 03 08 2 G >> QL 03 08 2		1	
5	016 409 143 BF	ring gear and pinion shaft 9 : 35 G QK 04 08 2 >> G QL 04 08 2 >>		1	
6	005 409 177	bolt		1	
7	N 013 319 1	tensioning sleeve 5 X 36		1	
8	* 016 409 170	thrust washer		2	
9	113 517 201 A	shim 0,15	/R	1	
9	113 517 202 A	shim 0,20	/R	X	
9	113 517 203 A	shim 0,30	/R	X	
9	113 517 204 A	shim 0,40	/R	X	
9	113 517 205 A	shim 0,50	/R	X	
9	113 517 206 A	shim 0,60	/R	X	
9	02A 409 210 A	shim 0,70	/R	X	
9	02A 409 210 C	shim 0,80	/R	X	
9	02A 409 210 E	shim 0,90	/R	X	

Pos	Part Number	Name	Remarks	Qty	Model	Pos	Part Number	Name	Remarks	Qty	Model
9	02A 409 210 G	shim 1,00	/R	X							
9	113 517 211 A	shim 1,20	/R	X							
10	* 011 519 215	thrust washer 0,50		2							
10	088 409 249	thrust washer 0,60		X							
10	088 409 249 A	thrust washer 0,70		X							
10	088 409 249 B	thrust washer 0,80		X							
11	088 409 355 C	flanged shaft		2							
12	088 409 359	screw		2							
13	016 409 161	nut		2							
14	018 409 381	shim 0,15	/L	1							
14	018 409 383	shim 0,20	/L	X							
14	018 409 385	shim 0,25	/L	X							
14	018 409 387	shim 0,50	/L	X							
14	018 409 389	shim 0,80	/L	X							
14	018 409 391	shim 1,00	/L	X							
14	018 409 393	shim 1,50	/L	X							
15	* 016 409 399 B	radial shaft seal		2							
16	* 016 598 081 A	repair kit for differential		1							
		- -- E N D -- -									

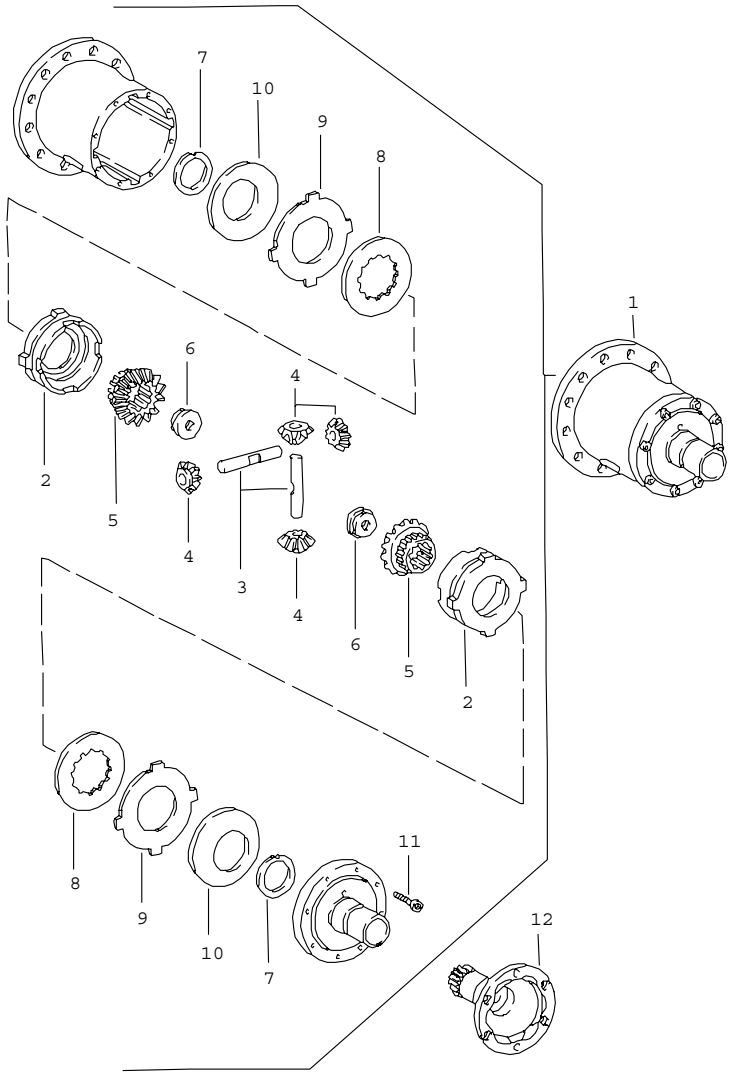

Pos	Part Number	Name	Remarks	Qty	Model
		limited-slip differential for manual transmission			M 220
1	944 332 053 00	limit.-slip different. 40%		1	
2	951 332 511 00	thrust ring		2	
3	928 332 541 00	differential shaft		2	
4	944 332 531 00	bevel pinion		4	
5	944 332 535 00	shaft bevel gear		2	
6	016 409 161	nut		2	
7	944 332 561 00	thrust washer		2	
8	917 332 551 10	inner disc 2,00		2	
9	917 332 552 10	disc with external splines 1,90		2	
9	917 332 552 11	disc with external splines 2,00		X	
9	917 332 552 12	disc with external splines 2,10		X	
10	928 332 555 00	cup spring 2,00		2	
11	999 119 011 00	pan-head screw M 8 X 1 X 25		8	
12	088 409 355 C	flanged shaft		2	
		- -- E N D -- -			

Model	Year	MG	SG	Illustration	Restrictions	Update				
944	85	3	06	306-00		187	10:27	07.04.2005	PORSCHE	PET	PORSCHE

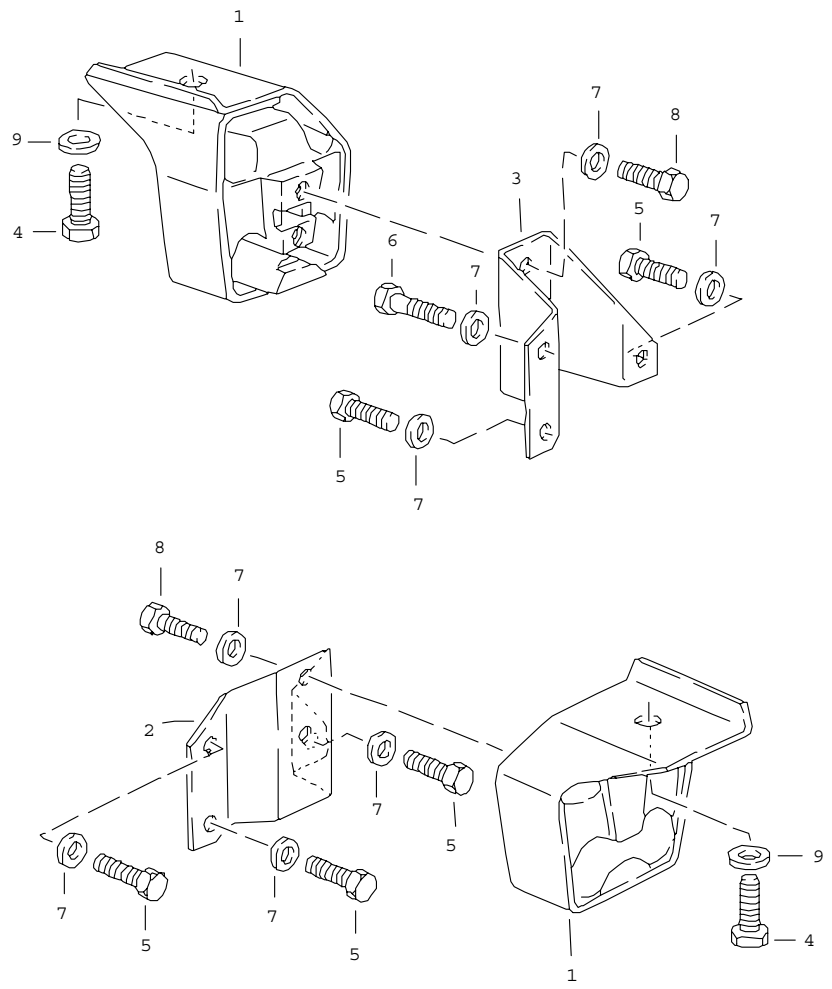

Pos	Part Number	Name	Remarks	Qty	Model
		transmission suspension for manual transmission			
1	944 375 045 00	transmission mounting yellow		2	
1	944 375 045 05	transmission mounting white see q-information GRP. 3		2	
2	477 399 167 E	bracket	/L	1	
3	477 399 168 E	bracket	/R	1	
4	900 075 111 08	hexagon-head bolt M 10 X 30		2	
5	N 010 240 7	hexagon-head bolt M 8 X 20		2	
6	N 010 359 4	hexagon-head bolt M 8 X 38		2	
7	N 011 525 13	washer A 8,4		8	
8	900 075 029 09	hexagon-head bolt M 8 X 25		4	
9	N 011 527 12	washer A 10,5		2	
		- -- E N D -- -			

Model	Year	MG	SG	Illustration	Restrictions	Update				
944	85	3	07	307-00		187	10:27	07.04.2005	PORSCHE	PET	PORSCHE

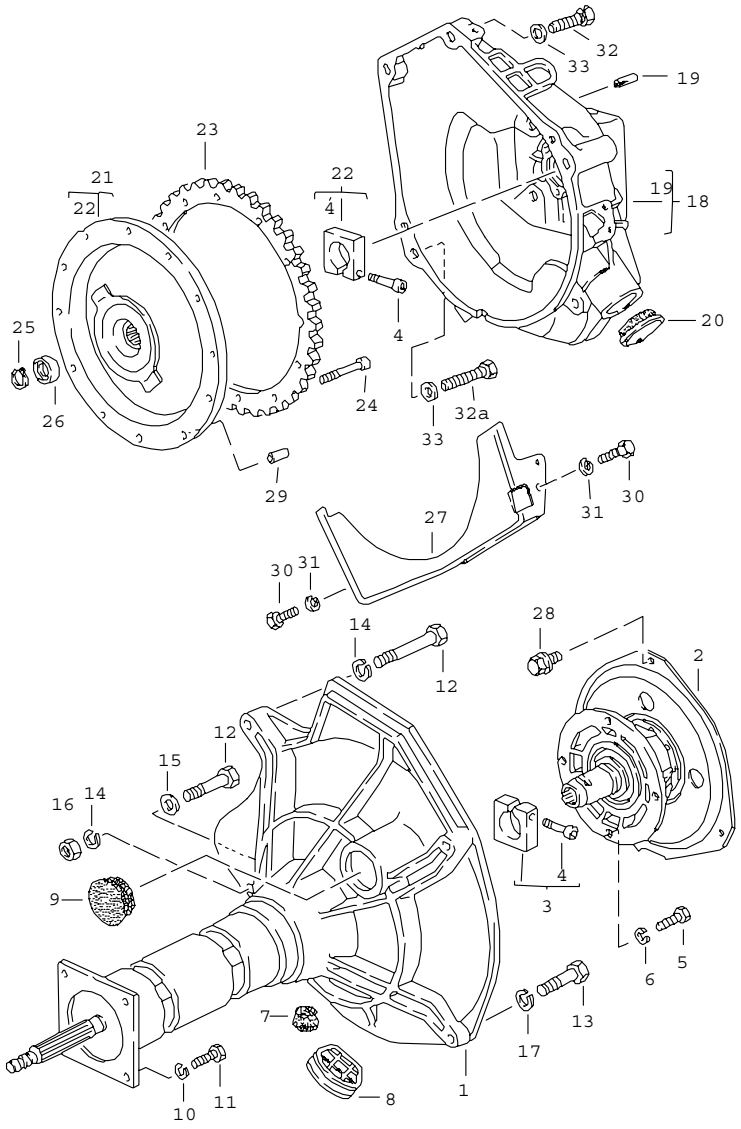

Pos	Part Number	Name	Remarks	Qty	Model
		central tube automatic transmission			
1	> 944 421 107 03	central tube		1	
2	944 421 110 00	converter mounting		1	
3	922 421 239 02	clamping piece		1	
4	931 421 240 00	clamping screw		2	
5	900 075 029 09	hexagon-head bolt M 8 X 25		4	
6	N 012 241 11	spring washer B 8		4	
7	477 521 177	cap		1	
8	477 521 277 C	cap		1	
9	477 521 277 A	cap		1	
10	900 027 016 02	lock ring B 10		4	
11	N 010 275 4	hexagon-head bolt M 10 X 35		4	
12	N 010 185 3	hexagon-head bolt M 12 X 80		3	
13	N 040 240 2	hexagon-head bolt M 10 X 50		1	
14	900 028 014 02	spring washer B 12		3	
15	N 011 531 7	washer A 13		1	
16	N 011 020 8	hexagon nut M 12		1	
17	N 012 230 1	spring washer B 10		1	
18	944 116 043 06	clutch housing		1	
19	N 012 690 1	grooved pin 10 X 32		3	
20	931 116 177 00	cap		2	
21	944 116 065 02	damper		1	
22	922 421 255 00	clamping piece		1	

Pos	Part Number	Name	Remarks	Qty	Model
23	944 116 239 02	starter ring		1	
24	N 014 717 2	pan-head screw M 8 X 40		9	
25	900 273 002 01	circlip 17 X 1		1	
26	944 116 631 00	spacer sleeve 1,00		1	
26	944 116 631 01	spacer sleeve 2,00		X	
26	944 116 631 02	spacer sleeve 3,00		X	
26	944 116 631 03	spacer sleeve 4,00		X	
26	944 116 631 04	spacer sleeve 5,00		X	
26	944 116 631 05	spacer sleeve 6,00		X	
26	944 116 631 06	spacer sleeve 7,00		X	
26	944 116 631 07	spacer sleeve 8,00		X	
27	944 116 093 01	protective plate		1	
28	003 323 699 A	hexagon-head bolt		3	
29	999 095 019 00	clamping pin S 10 X 20		2	
30	N 010 254 6	hexagon-head bolt M 10 X 25		2	
31	N 012 028 1	lock ring A 10		2	
32	N 010 142 2	hexagon-head bolt M 12 X 50		2	
32A	N 010 191 2	hexagon-head bolt M 12 X 95		2	
33	N 011 531 7	washer A 13		4	
		- -- E N D -- -			

Model	Year	MG	SG	Illustration	Restrictions	Update				
944	85	3	08	308-00		187	10:27	07.04.2005	PORSCHE	PET	PORSCHE

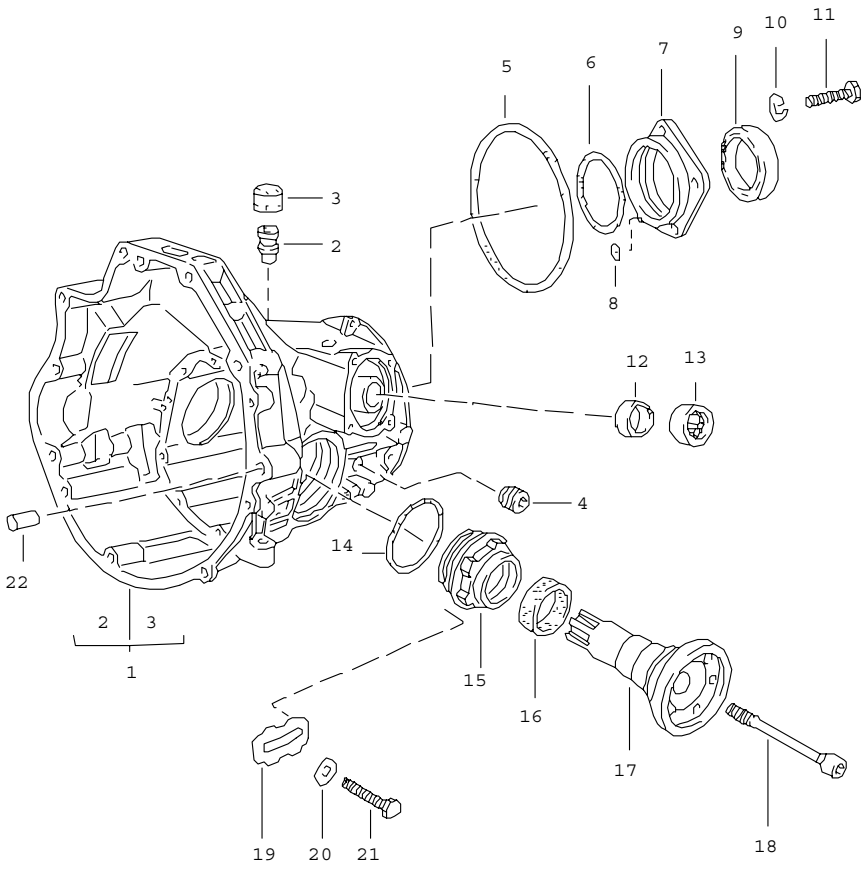

Pos	Part Number	Name	Remarks	Qty	Model
		replacement transmission final-drive housing automatic transmission			
-	> 087 300 038	replacement transmission		1	RCA RH
-	> 087 300 038 C	replacement transmission		1	RCD
-	> 087 300 038 A	replacement transmission		1	RCB
1	087 409 051 N	final-drive housing		1	RH RCA RCB
1	087 409 051 H	final-drive housing		1	RCD
2	010 409 847	breather pipe		2	
3	087 409 841	cap		2	
4	111 301 127 E	screw plug M 24 X 1,5		1	
5	* 010 409 549 B	round seal		1	
6	* 087 409 549	round seal		1	
7	087 409 623 A	cover		1	
8	* 089 409 637 A	sealing ring		1	
9	* 087 409 529 B	radial shaft seal		2	
10	N 012 028 1	lock ring A 10		5	
11	900 075 111 08	hexagon-head bolt M 10 X 30		5	
12	E 087 409 133 C	radial shaft seal		1	
13	082 409 139	needle-roller bearing		1	
14	* 011 519 345	round seal		2	
15	087 409 173	adjusting ring		2	
16	* 016 409 399 B	radial shaft seal		1	
17	087 409 355	flanged shaft	/L	1	
(17)	087 409 356	flanged shaft	/R	1	
18	087 409 359	screw	/L	1	
(18)	087 409 360	screw	/R	1	
19	010 409 257	tab washer		2	

Pos	Part Number	Name	Remarks	Qty	Model	Pos	Part Number	Name	Remarks	Qty	Model
20	N 012 226 5	spring washer B 6		2							
21	N 010 215 13	hexagon-head bolt M 6 X 15		2							
22	019 301 153	dowel sleeve		2							
		- -- E N D -- -									

Model	Year	MG	SG	Illustration	Restrictions	Update				
944	85	3	09	309-00		187	10:27	07.04.2005	PORSCHE	PET	PORSCHE

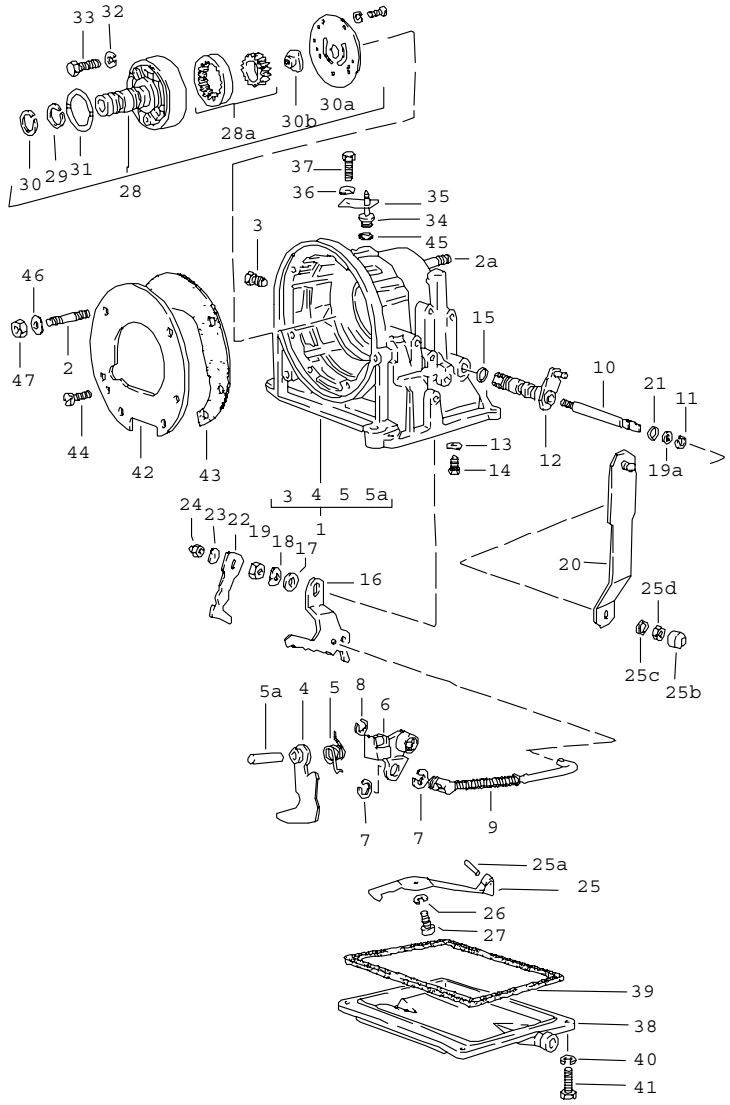

Pos	Part Number	Name	Remarks	Qty	Model
		transmission case automatic transmission			
1	010 321 101 G	transmission case		1	
2	N 900 044 02	stud AM 8A X 56		4	
2A	E N 014 523 2	stud AM 10A X 38		2	
3	003 507 133 A	screw plug M 10 X 1		3	
4	010 321 117 B	lever parking lock		1	
5	010 321 121 A	torsion spring		1	
5A	010 321 123	bolt		1	
6	010 321 135	engaging lever parking lock		1	
7	N 012 436 2	lock washer		2	
8	E N 012 438 1	lock washer		1	
9	010 321 153 A	operating rod		1	
10	010 321 209 C	shaft		1	
11	N 023 641 1	circlip A 10 X 1		1	
12	087 321 171 C	lever for cable control		1	
13	N 012 226 5	spring washer B 6		1	
14	N 010 224 1	hexagon-head bolt M 6 X 3,5		1	
15	* N 028 201 2	round seal 14 X 2,5		1	
16	010 321 193 B	locking segment		1	
17	211 611 179	washer A 16		1	
18	N 012 238 5	spring washer B 16		1	
19	N 011 164 2	hexagon nut M 16 X 1,5		1	

Pos	Part Number	Name	Remarks	Qty	Model
19A	010 321 180 B	support washer		1	
20	E 087 321 201 D	lever for cable control		1	
21	* 010 321 182	round seal		1	
22	010 321 215 E	lever kickdown control		1	
23	N 012 228 3	spring washer B 8		1	
24	N 011 008 8	hexagon nut M 8		1	
25	010 321 221	leaf spring		1	
25A	E N 013 325 1	tensioning sleeve 6 X 22		1	
25B	010 321 227	protection cap		1	
25C	010 321 229	spacer		1	
25D	N 011 137 1	hexagon nut M 10 X 1		1	
26	N 012 038 1	lock ring B 8		1	
27	N 010 239 11	hexagon-head bolt M 8 X 18		1	
28	010 321 241 F	oil pump		1	
28A	003 321 263	gear set oil pump		1	
29	003 321 261	piston ring		2	
30	010 321 261	piston ring		2	
30A	010 321 279	plate		1	
30B	003 321 273	driver		1	
31	010 323 161 A	thrust washer		1	
32	N 012 006 4	lock ring B 6		5	
33	N 010 347 3	hexagon-head bolt M 6 X 35		5	
34	477 321 303 A	cover		1	
35	011 321 307	clip		1	
36	N 012 226 5	spring washer B 6		1	
37	999 072 005 09	hexagon-head bolt M 6 X 12		1	
38	010 321 359 F	oil pan		1	
39	* 010 321 371 B	gasket		1	
40	N 012 038 1	lock ring A 8		4	
41	N 010 240 16	hexagon-head bolt M 8 X 20		4	
42	E 010 321 383 B	intermediate plate		1	
43	* 010 321 385 B	gasket		2	
44	E 900 014 004 02	pan-head screw AM 5 X 15		1	
45	* 003 321 419	round seal 24,5		1	
46	N 012 228 3	spring washer B 8		4	
47	N 011 008 8	hexagon nut M 8		4	
		- -- E N D -- -			

Model	Year	MG	SG	Illustration	Restrictions	Update				
944	85	3	09	309-05		187	10:28	07.04.2005	PORSCHE	PET	PORSCHE

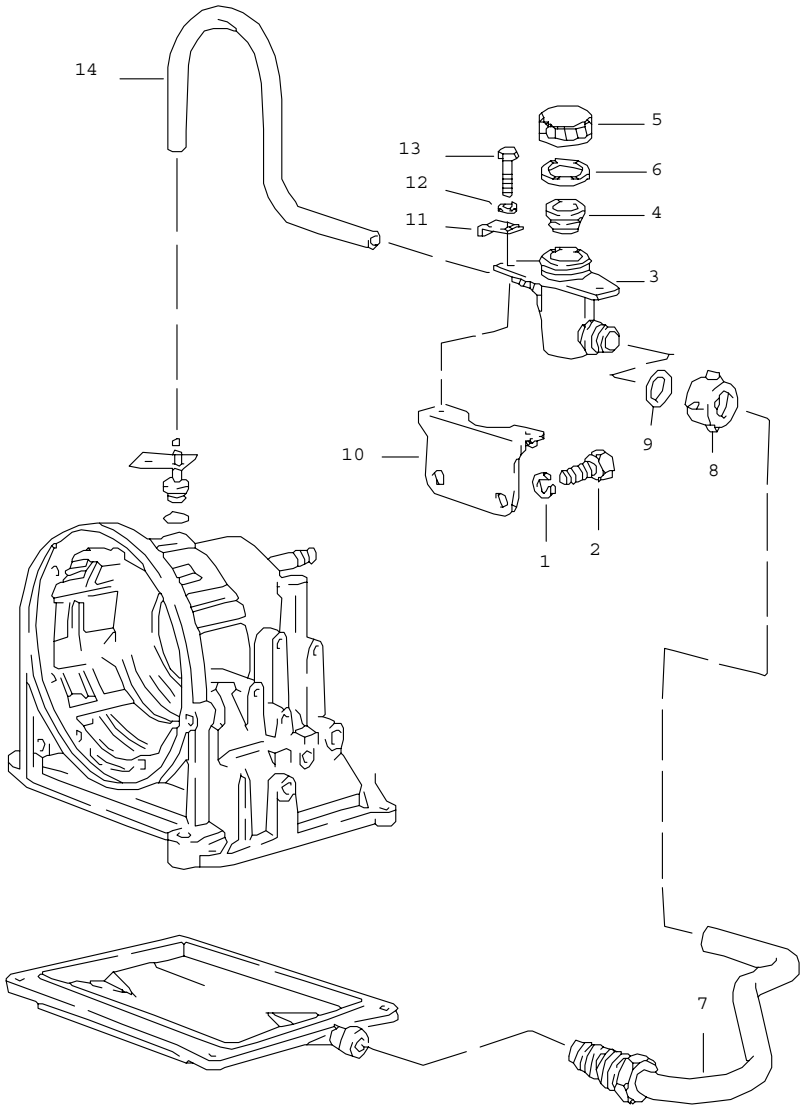

Pos	Part Number	Name	Remarks	Qty	Model
		oil inlet automatic transmission			
1	N 012 028 1	lock ring B 10		2	
2	N 010 253 7	hexagon-head bolt M 10 X 22		2	
3	477 321 475	container		1	
4	477 321 479 A	strainer		1	
5	477 321 481	cap		1	
6	477 321 483 A	gasket		1	
7	477 321 405	filler tube		1	
8	477 321 485	union nut		1	
9	477 321 487	o-ring 18 X 3		2	
10	477 321 491	support		1	
11	477 321 494	packing plate		2	
12	N 012 226 5	spring washer B 6		2	
13	N 010 215 13	hexagon-head bolt M 6 X 15		2	
14	477 321 495	hose 340 MM		1	
		- -- E N D -- -			

Model	Year	MG	SG	Illustration	Restrictions	Update				
944	85	3	09	309-10		187	10:28	07.04.2005	PORSCHE	PET	PORSCHE

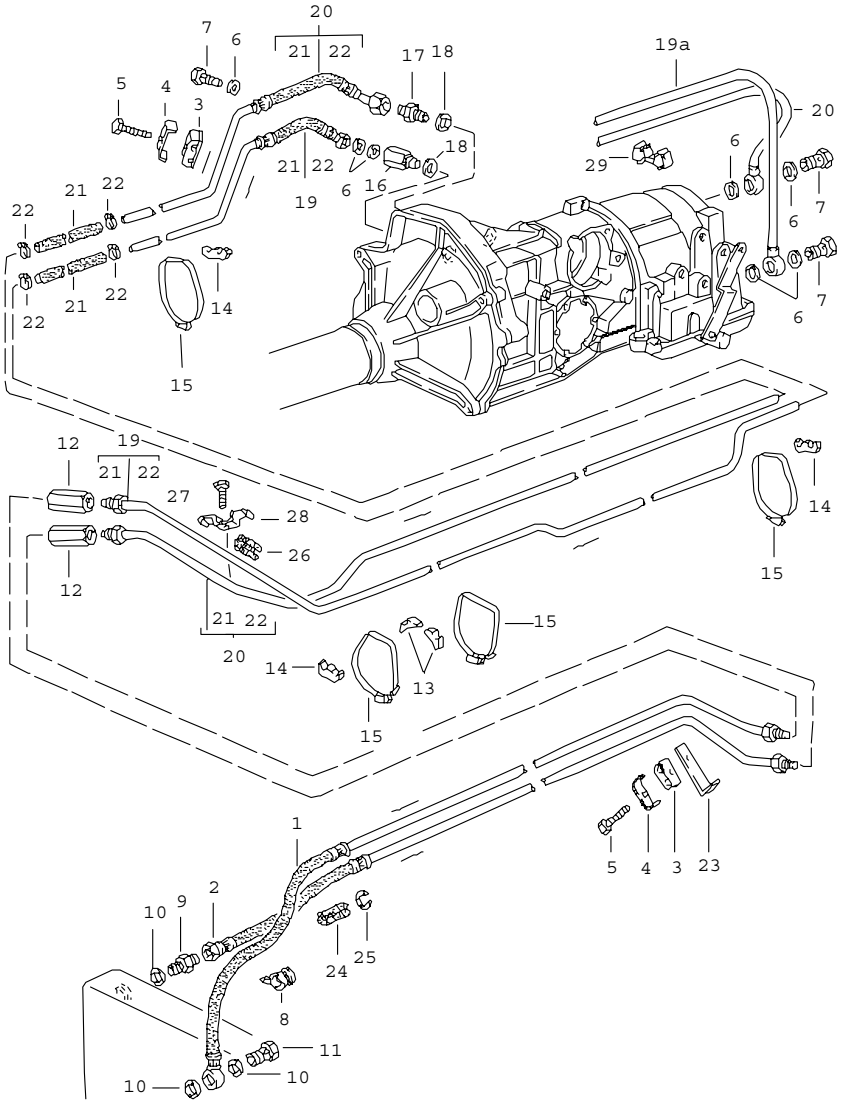

Pos	Part Number	Name	Remarks	Qty	Model
		transmission oil cooler automatic transmission			
1	944 307 010 02	pressure line		1	
2	944 307 011 01	return line		1	
3	999 511 121 40	clip		3	
4	928 347 455 00	shim		3	
5	N 010 220 3	hexagon-head bolt M 6 X 30		3	
6	900 123 043 30	sealing ring A 12 X 15,5		3	
7	999 134 018 02	banjo bolt A 6		1	
8	N 020 602 1	clip B 15		1	
9	N 900 450 01	connection piece ALL 10		1	
10	900 123 007 30	sealing ring A 14 X 18		3	
11	900 134 007 02	banjo bolt A 8		1	
12	477 209 169	connecting piece		2	
13	477 723 567	support		2	
14	944 307 190 00	support		3	
15	999 512 350 02	hose clamp LA 80 - 100		4	
16	087 409 057	union		1	
17	087 409 057 B	union		1	
18	010 409 563 A	sealing ring A 16 X 2,5		2	
19	944 307 004 03	pressure line		1	
19	944 307 004 03	pressure line		1	(J)
19A	944 307 004 05	pressure line	84-	1	
20	944 307 005 02	return line		1	
20	944 307 005 02	return line		1	(J)

Pos	Part Number	Name	Remarks	Qty	Model	Pos	Part Number	Name	Remarks	Qty	Model
20A	944 307 005 04	return line	84-	1							
21	999 181 532 50	connecting hose		2							
22	999 512 554 00	hose clamp LB 12-22		4							
23	944 107 237 00	support		2							
24	922 307 121 00	hose piece		2							
25	900 906 024 00	snap ring		2							
26	431 609 781	breather hose		2							
27	N 010 215 13	hexagon-head bolt M 6 X 15		1							
28	999 511 140 02	clip		1							
29	999 591 616 40	hose holder	84-	2							
		- -- E N D -- -									

Model	Year	MG	SG	Illustration	Restrictions	Update				
944	85	3	10	310-00		187	10:28	07.04.2005	PORSCHE	PET	PORSCHE

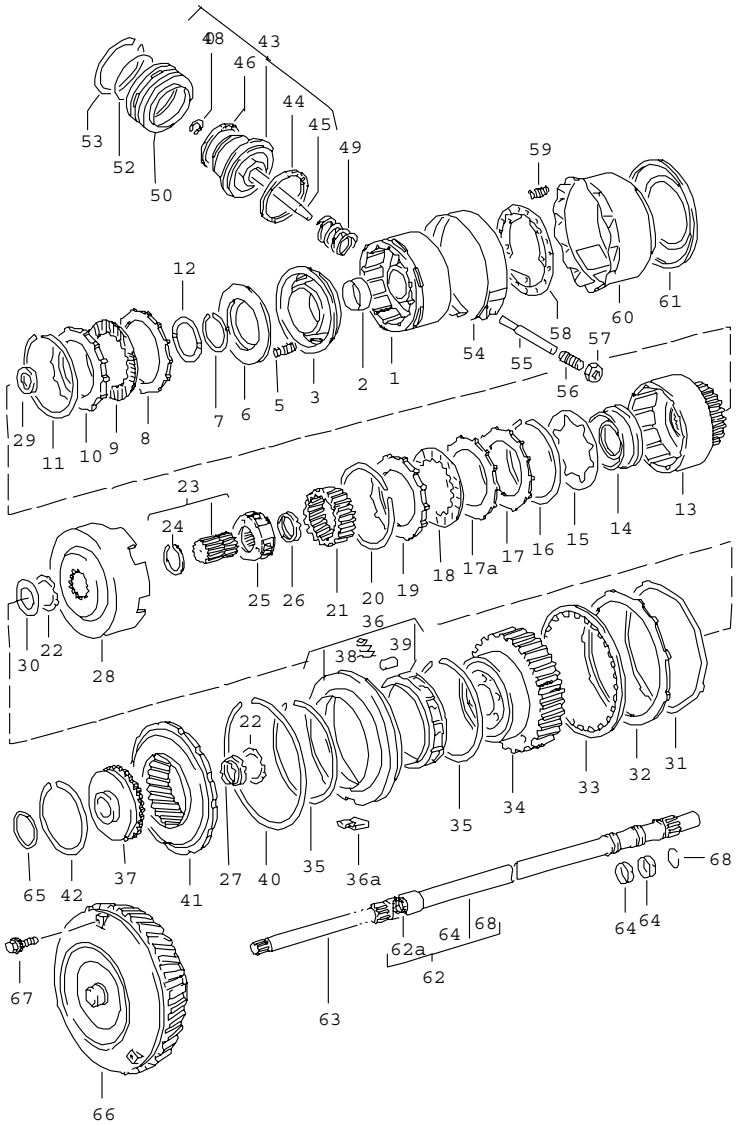

Pos	Part Number	Name	Remarks	Qty	Model
		transmission parts automatic transmission			
1	010 323 109 F	clutch drum G >>RCA 01 08 3 G >>RCB 01 08 3		1	RH RCA RCB
1	087 323 109	clutch drum G RCA 02 08 3>> G RCB 02 08 3>>		1	RCA RCB RCD
2	010 323 115	bearing sleeve		1	
3	010 323 121 B	piston		1	
5	010 323 129 A	compression spring		24	
6	010 323 131 A	concave washer		1	
7	003 323 135 A	circlip 55		1	
8	010 323 139 A	disc with external splines G >>RCA 01 08 3 G >>RCB 01 08 3		4	RH RCA RCB
8	087 323 139	disc with external splines G RCA 02 08 3>> G RCB 02 08 3>>		4	RCA RCB RCD
9	010 323 141 C	disc with external splines G >>RCA 01 08 3 G >>RCB 01 08 3		4	RH RCA RCB
9	087 323 141 A	disc with external splines G RCA 02 08 3>> G RCB 02 08 3>>		4	RCA RCB RCD
10	010 323 153	pressure plate G >>RCA 01 08 3 G >>RCB 01 08 3		1	RH RCA RCB
10	087 323 153	pressure plate G RCA 02 08 3>> G RCB 02 08 3>>		1	RCA RCB RCD

Pos	Part Number	Name	Remarks	Qty	Model
11	E 010 323 157	circlip 2,03 G >>RCA 01 08 3 G >>RCB 01 08 3		1	RH RCA RCB
11	087 323 157 B	circlip 2,03 G RCA 02 08 3>> G RCB 02 08 3>>		1	RCA RCB RCD
11	010 323 157 A	circlip 1,50 G >>RCA 01 08 3 G >>RCB 01 08 3		X	RH RCA RCB
11	087 323 157	circlip 1,50 G RCA 02 08 3>> G RCB 02 08 3>>		X	RCA RCB RCD
11	E 010 323 157 B	circlip 1,70 G >>RCA 01 08 3 G >>RCB 01 08 3		X	RH RCA RCB
11	087 323 157 A	circlip 1,70 G RCA 02 08 3>> G RCB 02 08 3>>		X	RCA RCB RCD
11	010 323 157 H	circlip 2,30 G >>RCA 01 08 3 G >>RCB 01 08 3		X	RH RCA RCB
11	087 323 157 C	circlip 2,30 G RCA 02 08 3>> G RCB 02 08 3>>		X	RCA RCB RCD
11	010 323 157 J	circlip 2,50 G >>RCA 01 08 3 G >>RCB 01 08 3		X	RH RCA RCB
11	087 323 157 D	circlip 2,50 G RCA 02 08 3>> G RCB 02 08 3>>		X	RCA RCB RCD
12	010 323 161 A	thrust washer		1	
13	087 323 209	clutch bell-housing		1	
14	010 323 217 A	piston		1	
15	010 323 229 D	cup spring forward clutch		1	
16	E 010 323 157	circlip 2,03		1	
17	010 323 237 A	pressure plate		1	
17A	010 323 139	disc with external splines forward clutch		4	
18	010 323 241 B	inner disc		4	
19	010 323 253 G	pressure plate 2,30		1	
19	010 323 253 H	pressure plate 2,70		X	
19	010 323 253 J	pressure plate 3,10		X	
19	010 323 253 K	pressure plate 3,50		X	
19	010 323 253 L	pressure plate 3,90		X	
20	E 010 323 159 B	lock ring		1	
21	010 323 273 B	ring gear		1	RH
21	010 323 273 C	ring gear		1	RCA RCB RCD
22	010 323 291 A	thrust washer		1	
23	010 323 285 E	sun gear		1	RH
23	010 323 285 F	sun gear		1	RCA RCB RCD
24	E N 042 451 1	snap ring		1	RH
24	N 042 465 1	snap ring		1	RCA RCB RCD

Pos	Part Number	Name	Remarks	Qty	Model
25	010 323 303 B	planet-gear carrier		1	RH
25	010 323 303 F	planet-gear carrier		1	RCA RCB RCD
26	010 323 340 D	needle-roller bearing		1	
27	010 323 339 D	needle-roller bearing		1	
28	010 323 281	driving shell		1	RH
28	010 323 281 F	driving shell G >>RCA 01 08 3 G >>RCB 01 08 3		1	RCA RCB
28	087 323 281	driving shell G RCA 02 08 3>> G RCB 02 08 3>>		1	RCA RCB RCD
29	010 321 157 A	needle-roller bearing		1	
30	010 323 293 B	thrust washer		1	RH
30	010 323 293 C	thrust washer		1	RCA RCB RCD
31	010 323 295 C	spring washer G >>RCA 03 03 3 G >>RCB 03 03 3		1	
32	010 323 227 A	disc with external splines		4	
33	010 323 231 C	inner disc		4	
34	010 323 805 D	planet-gear carrier		1	RH
34	010 323 805 F	planet-gear carrier		1	RCA RCB RCD
35	010 323 651	circlip		2	
36	010 323 383 C	free wheel lock 1st gear		1	
36A	010 323 389 E	key		1	
37	087 323 373 A	hub		1	RH
37	087 323 373	hub		1	RCA RCB RCD
38	010 323 643	compression spring		10	
39	N 026 360 1	roller		10	
40	010 323 653 A	circlip		1	
41	090 323 363 A	ring gear		1	RH
41	090 323 363 B	ring gear		1	RCA RCB RCD
42	090 323 369	circlip		1	RH
42	010 323 369 A	circlip		1	RCA RCB RCD
43	010 323 511 K	piston G >>RCA 01 08 3 G >>RCB 01 08 3		1	RH RCA RCB
(43)	087 323 512 A	piston G RCA 02 08 3>> G RCB 02 08 3>>		1	RCA RCB RCD
44	003 323 525 A	sealing ring		1	
45	010 323 517 D	piston rod G >>RCA 01 08 3 G >>RCB 01 08 3		1	RCA RCB
46	010 323 487 C	sealing ring		1	
48	010 323 541 B	lock washer G >>RCA 01 08 3 G >>RCB 01 08 3		1	RCA RCB
49	010 323 505 A	compression spring		1	
50	087 323 529	cover		1	RCA RCB
50	087 323 529	cover		1	RCD
52	010 323 533	round seal		3	
53	010 323 537 A	circlip		1	
54	010 323 461 A	brake band		1	
55	010 323 543 A	bolt G >>RCA 01 08 3 G >>RCB 01 08 3		1	
55	087 323 543	bolt G RCA 02 08 3>> G RCB 02 08 3>>		1	RCA RCB RCD
56	010 323 455 A	adjusting screw		1	
57	N 011 162 9	hexagon nut M 12 X 1,5		1	

Pos	Part Number	Name	Remarks	Qty	Model
58	010 323 497 C	supporting plate		1	
59	010 323 489 B	compression spring		20	
60	010 323 493 D	pipe G >>RCA 03 03 3 G >>RCB 03 03 3		1	RH RCA RCB
60	010 323 493 G	pipe G RCA 04 03 3>> G RCB 04 03 3>>		1	RCA RCB RCD
61	010 323 479 A	piston G >>RCA 03 03 3 G >>RCB 03 03 3		1	RH RCA RCB
61	010 323 477	piston G RCA 04 03 3>> G RCB 04 03 3>>		1	RCA RCB RCD
62	087 323 553 A	turbine shaft		1	
62A	087 323 559	gasket		1	
63	010 323 561 A	oil pump shaft		1	
64	010 323 557 A	piston ring		2	
65	010 323 345 C	adjusting shim 0,40		1	
65	010 323 346 C	adjusting shim 1,20		X	
66	003 323 571 J	converter		1	RH RCA RCD
66	082 323 571	converter		1	RCB
67	003 323 699 A	hexagon-head bolt		3	
68	010 323 558	wire ring		1	
		- -- E N D -- -			

Pos	Part Number	Name	Remarks	Qty	Model

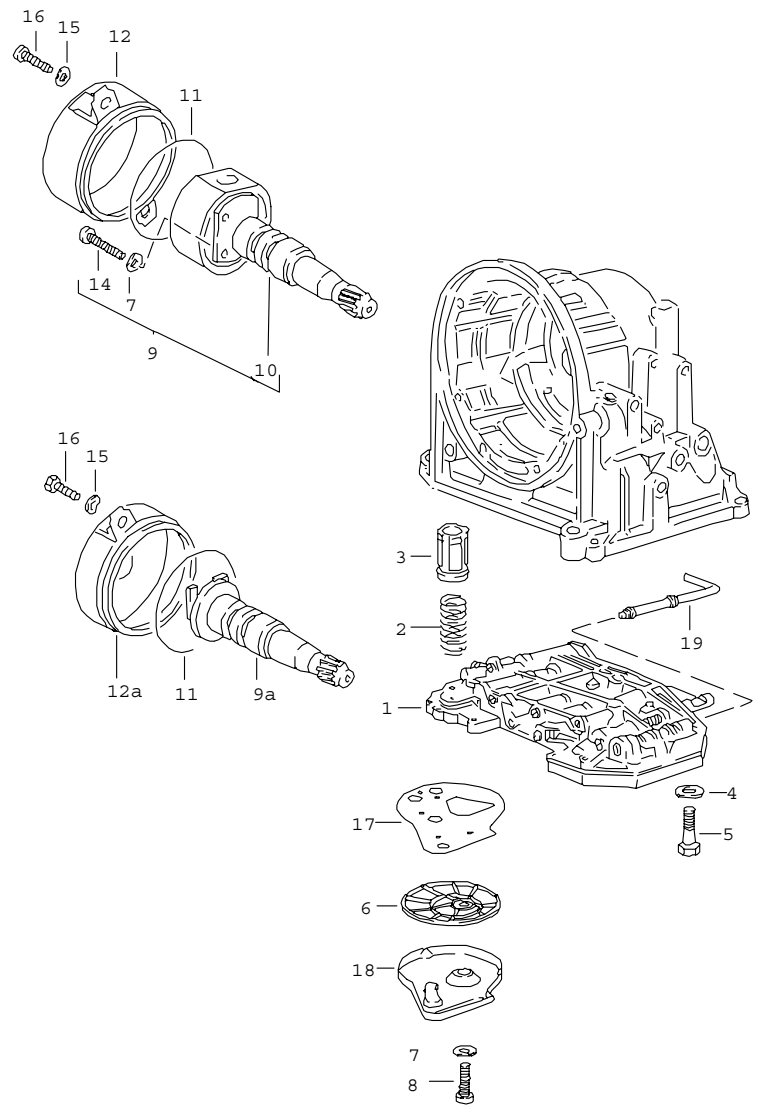

Pos	Part Number	Name	Remarks	Qty	Model
		hydraulic control unit regulator oil strainer automatic transmission			
1	087 325 032 P	hydraulic control unit		1	RH
1	087 325 037 C	hydraulic control unit		1	RCA RCB
1	087 325 037 H	hydraulic control unit		1	RCD
2	003 325 417	compression spring		1	
3	003 325 405 F	piston		1	
4	N 012 226 5	spring washer B 6		11	
5	N 010 346 5	hexagon-head bolt M 6 X 30		11	
6	010 325 421 A	oil strainer		1	
7	N 012 222 4	spring washer B 5		4	
8	E 900 014 004 02	pan-head screw AM 5 X 15		2	
9	087 325 041	regulator G >>RCA 30 03 3 G >>RCB 30 03 3		1	RH RCA RCB
9A	087 325 041 B	regulator G RCA 31 03 3>> G RCB 31 03 3>>		1	RCA RCB RCD
10	E 087 325 305	governor shaft G >>RCA 30 03 3 G >>RCB 30 03 3		1	RH RCA RCB
11	* 011 519 345	round seal		1	
12	089 325 371	cover G >>RCA 30 03 3 G >>RCB 30 03 3		1	RH RCA RCB
12A	089 325 371 A	cover G RCA 31 03 3>> G RCB 31 03 3>>		1	RCA RCB RCD
14	N 014 153 1	oval-head screw M 5 X 40		2	

Pos	Part Number	Name	Remarks	Qty	Model	Pos	Part Number	Name	Remarks	Qty	Model
15	N 012 228 3	spring washer B 8		2							
16	N 010 240 16	hexagon-head bolt 8 X 20		2							
17	010 325 443	gasket		1							
18	010 325 429 A	cover		1							
19	010 325 277	manual valve		1							
		- -- E N D -- -									

Model	Year	MG	SG	Illustration	Restrictions	Update				
944	85	3	11	311-00		187	10:29	07.04.2005	PORSCHE	PET	PORSCHE

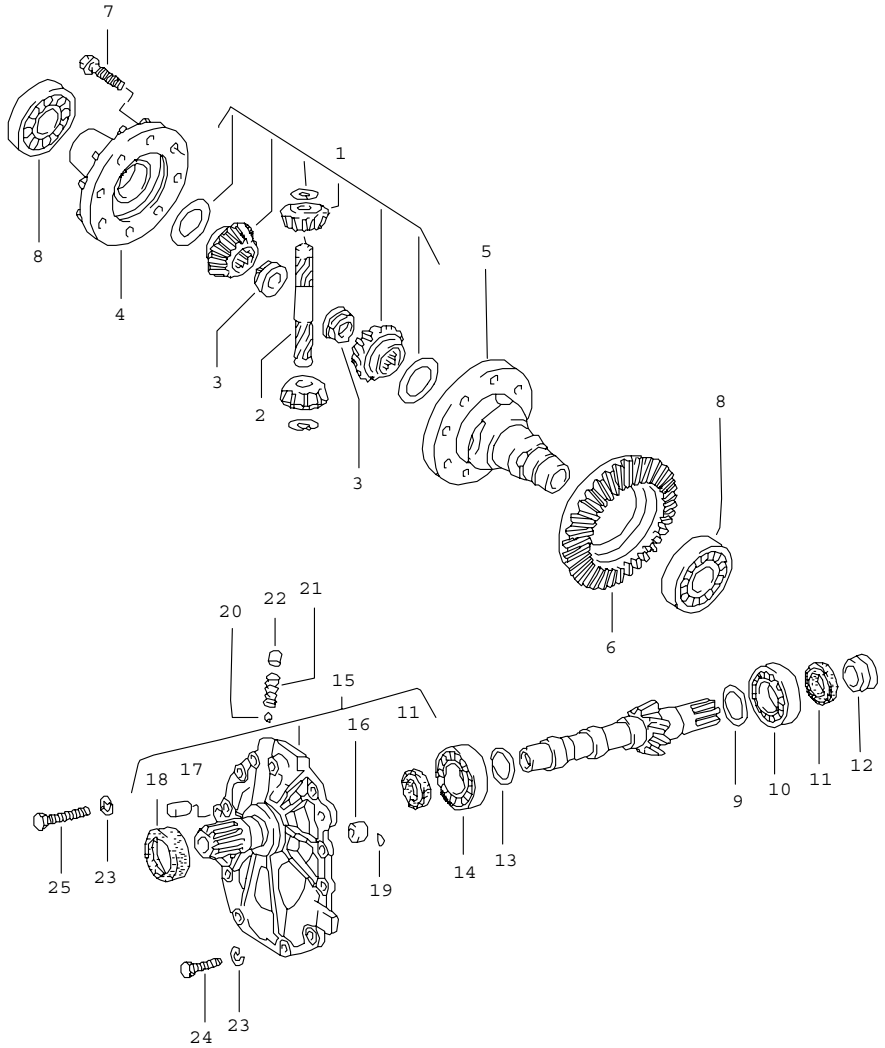

Pos	Part Number	Name	Remarks	Qty	Model
		differential automatic transmission			
1	* 016 598 081 A	repair kit for differential		1	
2	087 409 177	axle		1	
3	016 409 161	nut		2	
4	087 409 365	cover		1	
5	087 409 121	differential housing		1	
6	087 409 143 K	ring gear and pinion shaft		1	RH RCA RCD
		12:37		1	
6	087 409 143 J	ring gear and pinion shaft 11:38		1 1	RCB
7	087 409 135 A	hexagon-head bolt M 10 X 1 X 24		10	
8	113 517 185 C	taper roller bearing		2	
9	087 409 641 D	adjusting shim 1,10		1	
9	087 409 641 E	adjusting shim 1,125		X	
9	087 409 641 F	adjusting shim 1,15		X	
9	087 409 641 G	adjusting shim 1,175		X	
9	087 409 641 H	adjusting shim 1,20		X	
9	087 409 641 J	adjusting shim 1,225		X	
9	087 409 641 K	adjusting shim 1,25		X	
9	087 409 641 L	adjusting shim 1,275		X	
9	087 409 641 M	adjusting shim 1,30		X	
9	087 409 641 N	adjusting shim 1,325		X	

Pos	Part Number	Name	Remarks	Qty	Model
9	087 409 641 P	adjusting shim 1,35		X	
9	087 409 641 Q	adjusting shim 1,375		X	
9	087 409 641 R	adjusting shim 1,40		X	
9	087 409 641 S	adjusting shim 1,425		X	
9	087 409 641 T	adjusting shim 1,45		X	
9	087 409 641 AA	adjusting shim 1,475		X	
9	087 409 641 AB	adjusting shim 1,50		X	
9	087 409 641 AC	adjusting shim 1,525		X	
9	087 409 641 AD	adjusting shim 1,55		X	
9	087 409 641 AE	adjusting shim 1,575		X	
9	087 409 641 AF	adjusting shim 1,60		X	
9	087 409 641 AG	adjusting shim 1,625		X	
9	087 409 641 AH	adjusting shim 1,65		X	
9	087 409 641 AJ	adjusting shim 1,675		X	
9	087 409 641 AK	adjusting shim 1,70		X	
9	087 409 641 AL	adjusting shim 1,725		X	
9	087 409 641 AM	adjusting shim 1,75		X	
9	087 409 641 AN	adjusting shim 1,775		X	
9	087 409 641 AP	adjusting shim 1,80		X	
9	087 409 641 AQ	adjusting shim 1,825		X	
9	087 409 641 AR	adjusting shim 1,85		X	
9	087 409 641 AS	adjusting shim 1,875		X	
9	087 409 641 AT	adjusting shim 1,90		X	
10	087 409 551 C	taper roller bearing		1	
11	087 409 085 B	radial shaft seal		2	
12	087 409 639 A	bush		1	
13	082 519 141 AE	adjusting shim 1,10		1	
13	082 519 141 AF	adjusting shim 1,125		X	
13	082 519 141 AG	adjusting shim 1,15		X	
13	082 519 141 AH	adjusting shim 1,175		X	
13	082 519 141 AJ	adjusting shim 1,20		X	
13	082 519 141 AK	adjusting shim 1,225		X	
13	082 519 141 AL	adjusting shim 1,25		X	
13	082 519 141 AM	adjusting shim 1,275		X	
13	082 519 141 AN	adjusting shim 1,30		X	
13	082 519 141 AP	adjusting shim 1,325		X	
13	082 519 141 AQ	adjusting shim 1,35		X	
13	082 519 141 AR	adjusting shim 1,375		X	
13	082 519 141 AS	adjusting shim 1,40		X	

Pos	Part Number	Name	Remarks	Qty	Model
13	082 519 141 AT	adjusting shim 1,425		X	
13	082 519 141 BA	adjusting shim 1,45		X	
13	082 519 141 BB	adjusting shim 1,475		X	
13	082 519 141 BC	adjusting shim 1,50		X	
13	082 519 141 BD	adjusting shim 1,525		X	
13	082 519 141 BE	adjusting shim 1,55		X	
13	082 519 141 BF	adjusting shim 1,575		X	
13	082 519 141 BG	adjusting shim 1,60		X	
13	082 519 141 BH	adjusting shim 1,625		X	
13	082 519 141 BJ	adjusting shim 1,65		X	
13	082 519 141 BK	adjusting shim 1,675		X	
13	082 519 141 BL	adjusting shim 1,70		X	
13	082 519 141 BM	adjusting shim 1,725		X	
13	082 519 141 BN	adjusting shim 1,75		X	
13	082 519 141 BP	adjusting shim 1,775		X	
13	082 519 141 BQ	adjusting shim 1,80		X	
13	082 519 141 BR	adjusting shim 1,825		X	
13	082 519 141 BS	adjusting shim 1,85		X	
13	082 519 141 BT	adjusting shim 1,875		X	
13	082 519 141 CA	adjusting shim 1,90		X	
14	003 519 251	taper roller bearing		1	
15	087 409 524 C	cover		1	
16	019 301 153	dowel sleeve		1	
17	N 022 301 1	straight pin A 10 X 20		1	
18	* 010 409 568	radial shaft seal		1	
19	089 409 637 A	sealing ring 6 X 2		2	
20	N 025 657 1	ball		1	
21	089 409 713	spring		1	
22	087 409 095	cover		2	
23	N 012 038 1	lock ring A 8		11	
24	N 010 233 6	hexagon-head bolt M 8 X 28		9	
25	N 040 276 1	hexagon-head bolt M 8 X 52		2	

- -- E N D -- -

Model	Year	MG	SG	Illustration	Restrictions	Update				
944	85	3	12	312-00		187	10:29	07.04.2005	PORSCHE	PET	PORSCHE

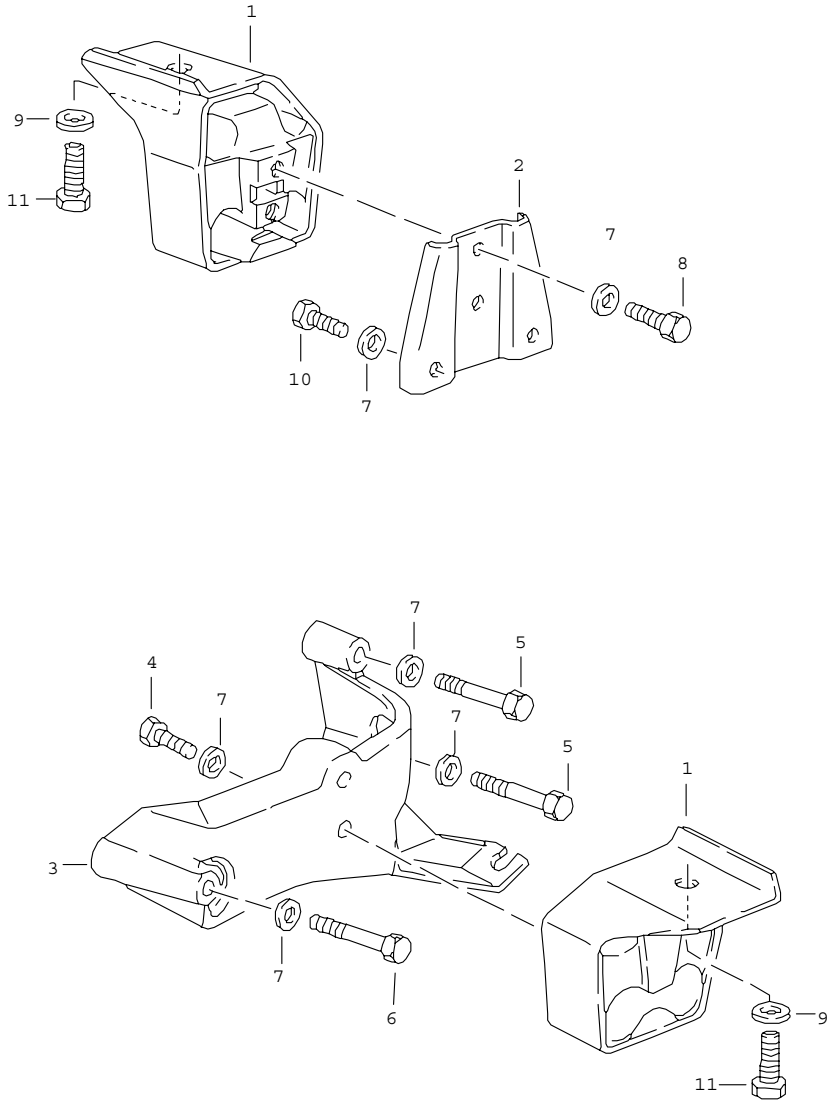

Pos	Part Number	Name	Remarks	Qty	Model
		transmission suspension automatic transmission			
1	944 375 045 00	transmission mounting		2	
2	477 399 169 C	suspension plate	/R	1	
3	477 399 171 E	bracket	/L -83	1	
3	477 399 171 E	bracket	/L 84-	1	
4	N 010 244 11	hexagon-head bolt M 8 X 30		2	
5	N 040 262 2	hexagon-head bolt M 8 X 50		2	
6	N 010 385 3	hexagon-head bolt M 8 X 85		1	
7	N 011 525 13	washer 8,4		9	
8	900 075 029 09	hexagon-head bolt M 8 X 25		2	
9	900 025 008 09	washer 10,5		2	
10	N 010 240 7	hexagon-head bolt M 8 X 20		2	
11	N 010 254 6	hexagon-head bolt M 10 X 25		2	
		- -- E N D -- -			

Model	Year	MG	SG	Illustration	Restrictions	Update		
944	85	3	98	REP		187	9:39	13.04.2005

Pos	Part Number	Name	Remarks	Qty	Model
		repair kits			
>>	> 477 300 912 B	set of seals for transmission comprising:		1	QK QL QM
-	928 303 120 01	shaft seal		1	
-	016 409 399 B	radial shaft seal		2	
-	113 301 185 A	sealing ring		1	
-	016 301 235 C	gasket		1	
-	088 311 599	sealing ring		2	
-	016 311 113 C	radial shaft seal		1	
-	016 301 455 A	gasket		1	
-	005 311 599	sealing washer		1	
>>	> 477 398 001	set of seals for automatic transmission comprising:		1	RH RCA RCB
-	010 321 182	round seal		1	
-	010 321 371 B	gasket		1	
-	010 321 385 B	gasket		1	
-	003 321 419	round seal		2	
-	010 323 117	sealing ring		1	
-	010 323 119	sealing ring		1	
-	010 323 487 C	sealing ring		1	
-	003 323 525 A	sealing ring		1	
-	010 323 533	round seal		3	
-	087 409 085 B	radial shaft seal		2	
-	087 409 133	radial shaft seal		1	
-	016 409 399 B	radial shaft seal		2	
-	087 409 529 B	radial shaft seal		2	
-	010 409 549 B	round seal		1	
-	087 409 549	round seal		1	
-	010 409 568	radial shaft seal		1	

Model	Year	MG	SG	Illustration	Restrictions	Update		
944	85	3	98	REP		187	9:39	13.04.2005

Pos	Part Number	Name	Remarks	Qty	Model
-	089 409 637 A	sealing ring		1	
-	011 519 345	round seal		3	
-	N 028 201 2	round seal		1	
>>	> 016 598 081 A	repair kit		1	RH RCA RCB RCD QK QL QM
		differential			
		comprising:			
		differential pinions large		2	
		differential pinions small		2	
-	011 519 215	thrust washer for differential pinions large		2	
-	016 409 170	thrust washer for differential pinions small use also: 088.409.249.A 088.409.249 B		2	
>>	> 928 116 901 00	repair kit		1	QK QL QM
		clutch operating cylinder comprising:			
		bellows		1	
		lock washer		1	
		boot		1	
		dust boot		1	
		ring		2	
-	944 116 911 00	repair kit for clutch comprising:		1	
		pressure plate		1	
		clutch plate		1	
		clutch release bearing		1	
		- -- E N D -- -			

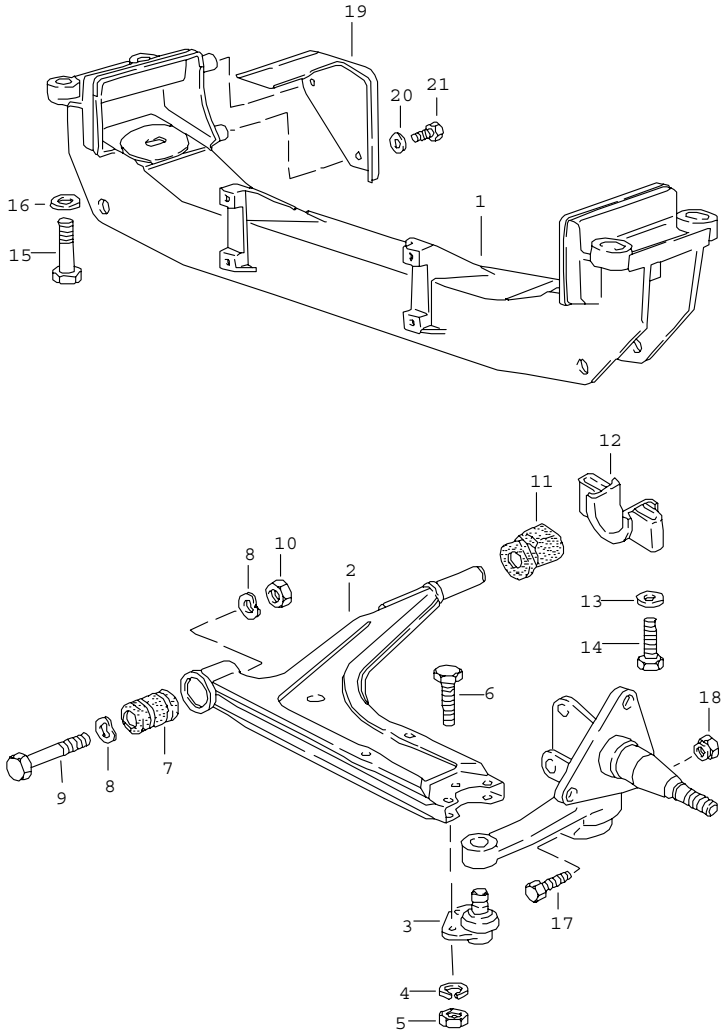

Pos	Part Number	Name	Remarks	Qty	Model
		control arm cross member			
1	944 341 103 06	cross member	/LL	1	
(1)	945 341 103 04	cross member	/RL	1	
2	171 407 153 D	control arm		2	
3	171 407 365 G	ball joint $ 17 MM		2	
4	N 042 001 1	lock ring A 7		6	
5	N 011 007 7	hexagon nut M 7		6	
6	N 040 204 3	hexagon-head bolt M 7 X 20		6	
7	171 407 182 D	rubber mounting		2	
8	900 025 009 02	washer A 13		4	
9	900 082 039 02	hexagon-head bolt M 12 X 1,5 X 100		2	
10	N 021 131 1	lock nut M 12 X 1,5		2	
11	477 407 181 A	rubber mounting		2	
12	477 407 169	clip		2	
13	477 407 425	washer		4	
14	N 040 321 1	hexagon-head bolt M 10 X 65		4	
15	N 010 183 1	hexagon-head bolt M 12 X 75		4	
16	999 025 074 02	washer		4	
17	N 010 445 6	hexagon-head bolt M 10 X 45		2	
18	N 021 130 2	lock nut M 10		2	
19	944 341 107 01	heat protection plate	/LL -84	1	
19	951 341 108 02	heat protection plate	/LL 85-	1	
(19)	945 341 107 01	heat protection plate	/RL -84	1	

Pos	Part Number	Name	Remarks	Qty	Model	Pos	Part Number	Name	Remarks	Qty	Model
(19)	952 341 108 02	heat protection plate	/RL 85-	1							
20	N 011 524 7	washer A 6		2							
21	N 010 215 13	hexagon-head bolt M 6 X 15		2							
		- -- E N D -- -									

Model	Year	MG	SG	Illustration	Restrictions	Update			
944	85	4	01	401-05		187	10:29	07.04.2005	PORSCHE PET PORSCHE

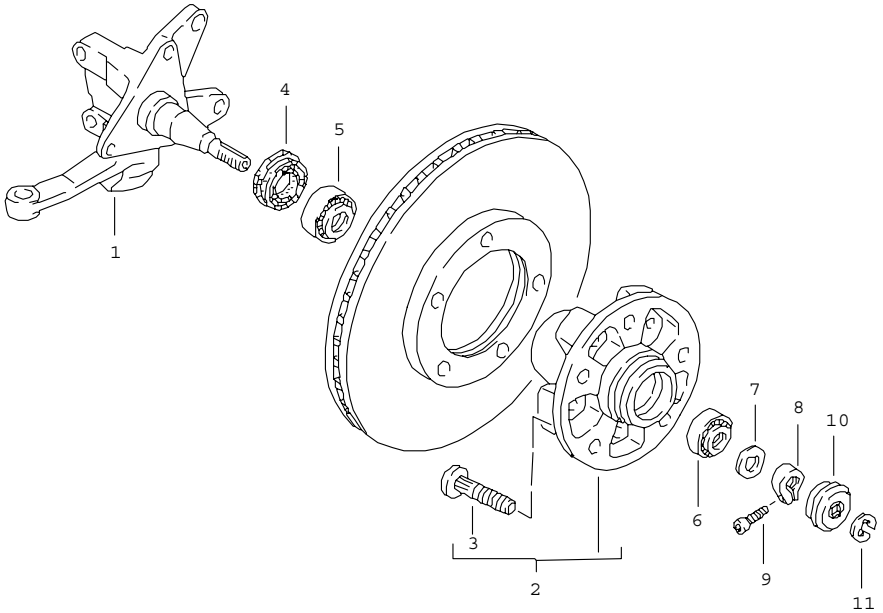

Pos	Part Number	Name	Remarks	Qty	Model
		steering knuckle			
1	477 407 311 L	steering knuckle	/L	1	
(1)	477 407 312 L	steering knuckle	/R	1	
2	477 405 065 B	front wheel hub		2	
3	904 341 671 00	wheel bolt		10	
4	477 405 641	radial sealing ring		2	
5	999 059 098 00	taper roller bearing		2	
6	999 059 065 00	taper roller bearing		2	
7	911 341 663 00	thrust washer		2	
8	911 341 673 00	clamping nut		2	
9	999 119 001 01	pan-head screw		2	
10	477 405 691 C	cap	/L	1	
(10)	477 405 692 C	cap	/R	1	
11	900 116 003 02	lock washer		1	
		- -- E N D -- -			

Model	Year	MG	SG	Illustration	Restrictions	Update				
944	85	4	02	402-00		187	10:30	07.04.2005	PORSCHE	PET	PORSCHE

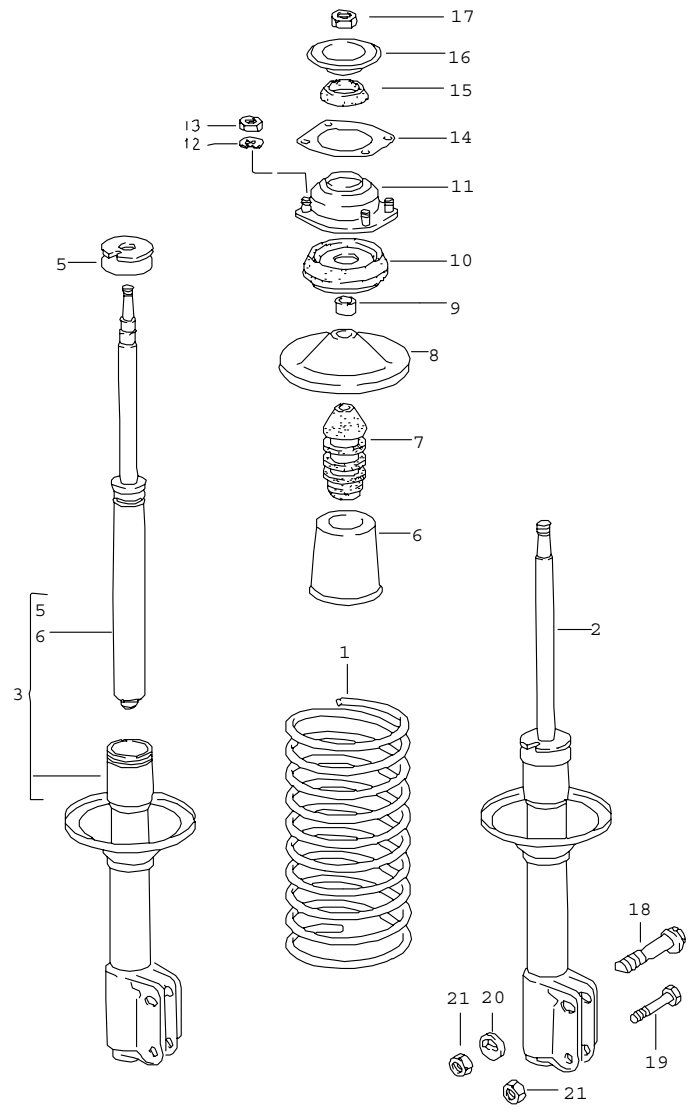

Pos	Part Number	Name	Remarks	Qty	Model
		springs shock absorber front			
1	477 411 105 Q	coil spring 1 set marked		1	
	954	blue			
2	944 343 031 12	vibration damper - koni -	/L	1	
(2)	944 343 032 12	vibration damper - koni -	/R	1	
3	944 343 031 11	vibration damper - koni -	/L	1	M 474
(3)	944 343 032 11	vibration damper - koni -	/R	1	M 474
4	944 343 059 00	vibration damper insert - koni -		2	M 474
5	171 412 045	union nut		2	
6	171 412 135	boot		2	
7	171 412 303 C	rubber stop		2	
8	133 412 341	concave washer		2	
9	E 823 412 365	spacer sleeve		2	
10	944 343 071 00	suspension strut mounting		2	
11	477 412 345	bearing flange		2	
12	N 012 228 3	spring washer B 12		8	
13	N 011 008 8	hexagon nut M 8		8	
(14)	133 412 367	sealing ring		2	
15	477 412 411	stop ring		2	
16	477 412 147	stop		2	
17	N 022 150 1	lock nut VM 14 X 1,5		2	
18	171 407 265	eccentric screw		2	

Pos	Part Number	Name	Remarks	Qty	Model	Pos	Part Number	Name	Remarks	Qty	Model
19	900 082 058 02	hexagon-head bolt M 12 X 1,5 X 55		2							
20	944 343 175 00	eccentric washer		2							
21	N 022 141 4	lock nut VM 12 X 1,5		4							
		- -- E N D -- -									

Model	Year	MG	SG	Illustration	Restrictions	Update				
944	85	4	02	402-05		187	10:30	07.04.2005	PORSCHE	PET	PORSCHE

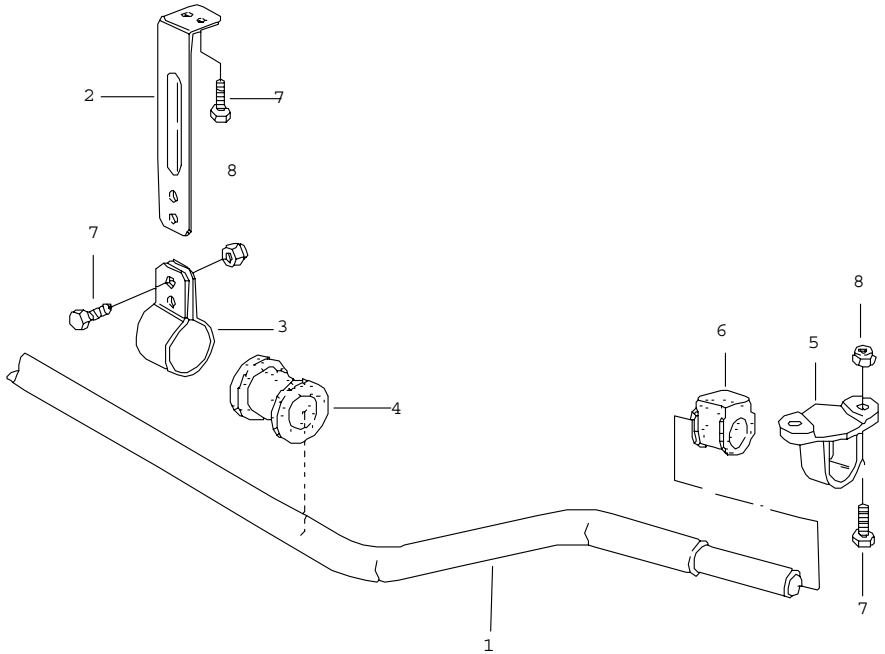

Pos	Part Number	Name	Remarks	Qty	Model
		stabiliser			
1	944 343 707 00	stabiliser $ 20 MM		1	
1	944 343 707 01	stabiliser $ 21,5 MM	-83	1	M 404
(1)	944 343 706 00	stabiliser $ 23 MM	84-	1	M 404
2	944 343 733 00	suspension		2	
3	944 343 731 00	clip		2	
4	477 411 053 G	rubber bush $ 20 MM		2	
(4)	477 411 053 N	rubber bush $ 21,5 MM	-83	2	M 404
(4)	477 411 053 J	rubber bush $ 23 MM	84-	2	M 404
5	944 343 735 00	bearing bracket	/L	1	
(5)	944 343 736 00	bearing bracket	/R	1	
6	171 411 314 A	rubber bush		2	
7	900 075 079 02	hexagon-head bolt M 8 X 22		12	
8	900 910 022 09	lock nut VM 8		8	
		- -- E N D -- -			

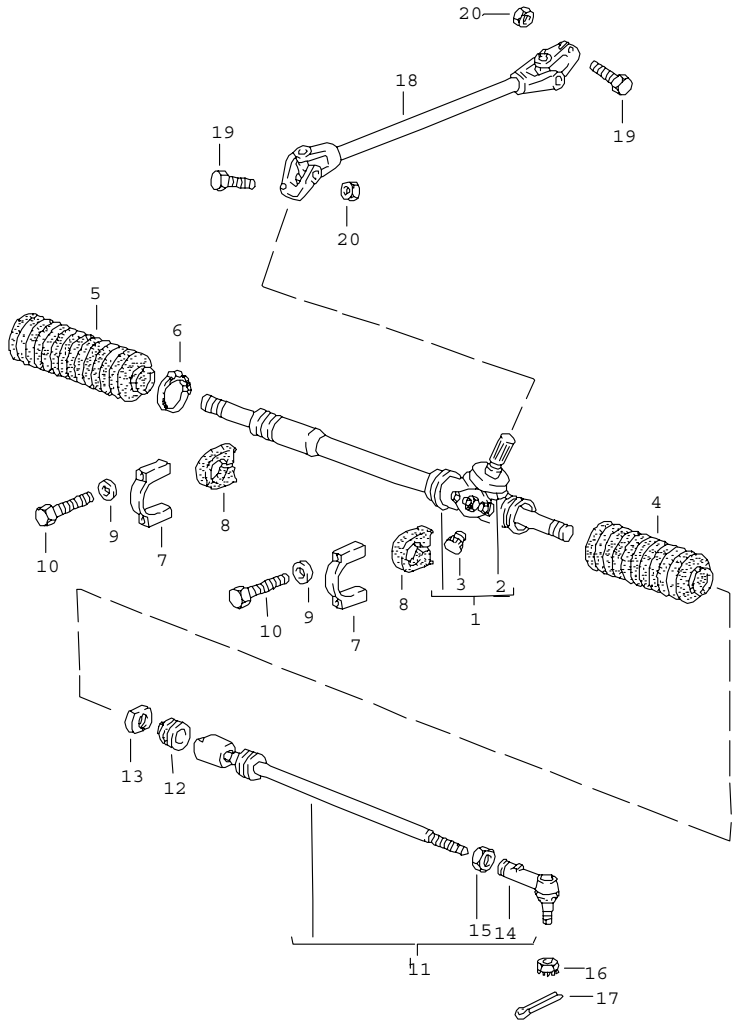

Pos	Part Number	Name	Remarks	Qty	Model
		steering gear tie rod			
1	944 347 011 00	steering gear	/LL	1	
(1)	945 347 011 00	steering gear	/RL	1	
2	477 419 321	cap		1	
3	477 419 115	plug		1	
4	171 419 831 C	boot	/L	1	
5	171 419 832 C	boot	/R	1	
6	823 419 843	terminal $ 45 MM		1	
7	944 347 223 01	clip	/LL	2	
(7)	945 347 223 00	clip	/RL	2	
8	944 347 137 00	rubber insert	/L	1	
(8)	944 347 139 00	rubber insert	/R	1	
9	900 025 007 02	washer A 8,4		2	
10	N 010 360 6	hexagon-head bolt M 8 X 60	/LL	4	
(10)	900 074 134 02	hexagon-head bolt M 8 X 45	/RL	4	
11	944 347 033 00	tie rod F >>94DN4 02644 F >>94DN4 02812	 /LL /RL	2	
11	944 347 033 01	tie rod F 94DN4 02645>>>>94DN4 02813>>	 /LL /RL	2	
12	477 419 827	stop ring		2	
13	171 419 855	nut M 22 X 1,5		2	
14	944 347 333 00	ball joint F >>94DN4 02644 F >>94DN4 02812	 /LL /RL	2	
14	944 347 333 01	ball joint F 94DN4 02645>>>>94DN4 02813>>	 /LL /RL	2	
15	N 011 163 3	hexagon nut M 14		2	

Pos	Part Number	Name	Remarks	Qty	Model	Pos	Part Number	Name	Remarks	Qty	Model
16	N 011 212 2	castle nut M 12		2							
17	N 012 532 1	cotter pin 3 X 25		2							
18	944 347 027 01	drive shaft	/LL	1							
(18)	945 347 027 00	drive shaft	/RL	1							
19	N 010 335 7	hexagon-head bolt M 8 X 35		2							
20	900 910 022 09	lock nut VM 8		2							
		- -- E N D -- -									

Model	Year	MG	SG	Illustration	Restrictions	Update				
944	85	4	03	403-02		187	10:30	07.04.2005	PORSCHE	PET	PORSCHE

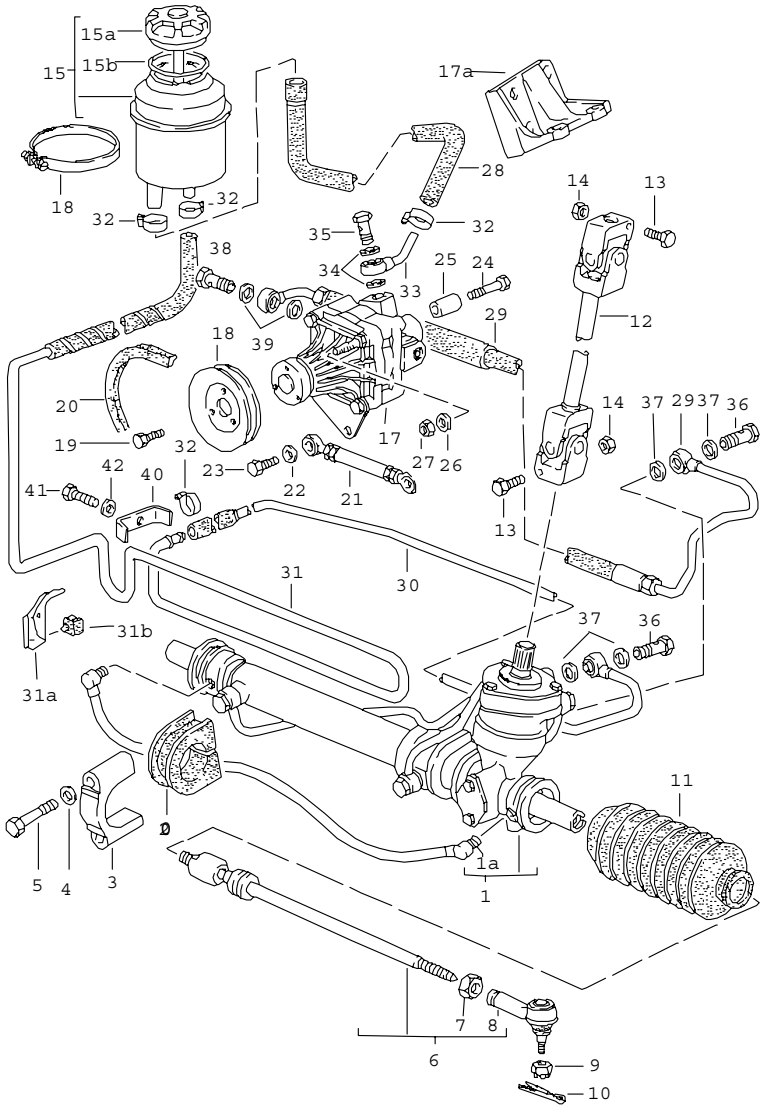

Pos	Part Number	Name	Remarks	Qty	Model
		power steering steering gear vane type pump lines see technical information GR.4, NR.6/90			M 657
1	> 944 347 011 24	steering gear	/LL	1	
(1)	> 945 347 011 22	steering gear	/RL	1	
1A	944 347 311 00	compensating line		1	
2	944 347 137 00	rubber insert	/L	1	
(2)	944 347 139 01	rubber insert	/R	1	
(3)	945 347 023 00	clip	/RL	2	
3	944 347 223 01	clip	/LL	2	
4	900 025 007 02	washer A 8,4		4	
5	N 010 360 6	hexagon-head bolt M 8 X 60		4	
6	944 347 033 20	tie rod		2	
7	N 011 163 3	hexagon nut M 14		2	
8	944 347 333 00	ball joint		2	
9	N 011 212 2	castle nut		2	
10	N 012 532 1	cotter pin		2	
11	171 419 831 C	boot		2	
12	944 347 027 02	drive shaft	/LL	1	
(12)	945 347 027 00	drive shaft	/RL	1	
13	N 010 335 7	hexagon-head bolt M 8 X 35		2	
14	900 910 022 09	lock nut VM 8		2	
15	928 347 015 05	oil tank		1	
15A	928 347 925 00	cover		1	
15B	928 347 927 00	gasket		1	
16	999 512 350 02	hose clamp		1	

Pos	Part Number	Name	Remarks	Qty	Model
17	944 347 432 08	vane type pump		1	
17A	944 101 147 00	bracket for vane type pump	-84	1	
(17A)	944 101 147 01	bracket for vane type pump	85-	1	
18	944 347 437 03	pulley		1	
19	999 072 005 09	hexagon-head bolt M 6 X 12		3	
20	999 192 236 50	narrow v-belt 9,5 X 950		1	
21	944 347 053 00	strut		1	
22	900 025 007 02	washer A 8,4		1	
23	900 075 029 09	hexagon-head bolt M 8 X 25		2	
24	N 010 361 4	hexagon-head bolt M 8 X 65		1	
25	944 347 443 00	sleeve		1	
26	900 025 007 02	washer A 8,4		1	
27	900 076 025 02	hexagon nut M 8		1	
28	944 347 445 02	hose		1	
29	944 347 447 00	pressure line	/LL	1	
(29)	945 347 447 02	pressure line	/RL	1	
30	944 347 449 01	return line	/LL	1	
(30)	945 347 449 02	return line	/RL	1	
31	944 347 459 00	return line	-83	1	
31	944 347 459 02	return line	84-	1	
31A	944 347 465 02	support return line		1	
31B	944 347 467 00	cable clip for holder		4	
32	999 512 554 00	hose clamp LA 12-22		2	
32A	999 512 346 02	hose clamp 16 - 25		1	
32B	999 512 450 02	hose clamp 12 - 20		1	
33	999 230 158 02	nipple		1	
34	N 100 184 01	sealing ring D 16 X 20		2	
35	900 134 014 02	banjo bolt		1	
36	999 134 018 02	banjo bolt 12	/LL	2	
36	999 134 018 02	banjo bolt 12	/RL	1	
36	N 021 053 2	banjo bolt 10	/RL	1	
37	900 123 026 20	sealing ring D 12 X 15,5	/LL	4	
37	900 123 026 20	sealing ring D 12 X 15,5	/RL	2	
37	N 100 390 01	sealing ring D 10 X 13,5	/RL	2	
38	900 134 007 02	banjo bolt		1	
39	900 123 042 20	sealing ring D 14 X 18		2	
40	928 347 455 00	shim		1	
41	900 074 015 02	hexagon-head bolt M 6 X 30		1	
42	N 011 524 7	washer A 6,4		1	
		- -- E N D -- -			

Model	Year	MG	SG	Illustration	Restrictions	Update				
944	85	4	03	403-05		187	10:31	07.04.2005	PORSCHE	PET	PORSCHE

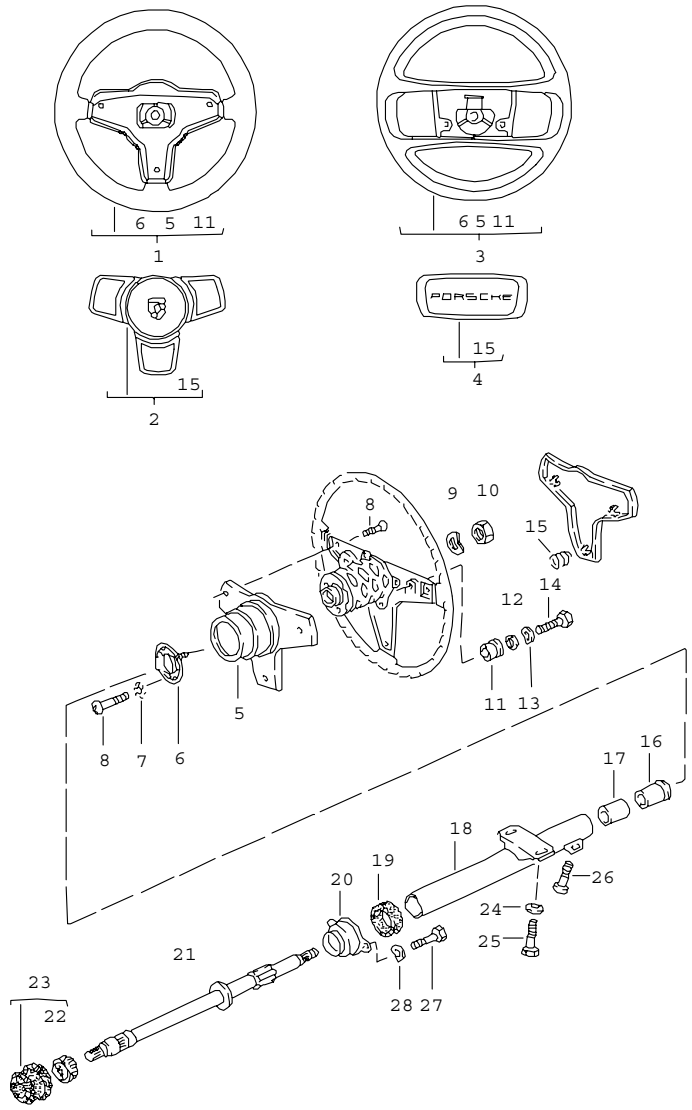

Pos	Part Number	Name	Remarks	Qty	Model
		steering wheel steering column			
1	944 347 084 01	sports steering wheel leatherette $ 380 MM		1	
	1DB	black			
	4RB	brown			
(1)	944 347 084 04	sports steering wheel leather $ 380 MM		1	M 416
	1AJ	black			
	4RB	brown			
1	944 347 084 03	sports steering wheel leather $ 380 MM with elevated hub		1	M 018
	1DB	black			
	4RB	brown			
2	944 347 859 04	pad for horn		1	
	1DB	black			
	4RB	brown			
3	944 347 084 02	sports steering wheel leather $ 363 MM		1	M 431
	1AJ	black			
	4RB	brown			
4	944 347 859 05	pad for horn		1	M 431
	1AJ	black			
	4RB	brown			
5	944 347 057 00	lining		1	
	1DB	black			
	4RB	brown			
(5)	944 347 857 00	lining		1	M 431
	1DB	black			

Pos	Part Number	Name	Remarks	Qty	Model
	4RB	brown			
6	113 415 660 A	slip ring		1	
7	N 012 131 2	shake-proof washer J 3,7		3	
8	113 415 869	oval-head screw AM 3,5 X 10		6	
9	N 012 238 5	spring washer B 16		1	
10	900 078 006 01	hexagon nut M 16 X 1,5		1	
11	321 419 779	insulating bush		3	
11	321 419 779 A	insulating bush		3	M 431
12	900 025 002 02	washer A 4,3		3	
13	N 042 122 2	shake-proof washer A 4,3		3	
14	N 010 261 3	hexagon-head bolt M 4 X 15		3	
15	171 419 697	spring		3	
16	171 419 341	support ring		1	
17	171 419 549	clamping sleeve		1	
18	477 419 563 B	steering column tube		1	
19	411 417 613	rubber mounting		1	
20	411 417 605	support ring		1	
21	477 419 505 J	steering column	/LL	1	
(21)	E 478 419 505 B	steering column	/RL	1	
(21)	944 347 019 00	steering column	/LL	1	M 657
(21)	E 945 347 019 00	steering column	/RL	1	M 657
22	113 415 511	needle-roller bearing		1	
23	477 419 059	needle sleeve		1	
24	111 129 720	washer A 8,4		2	
25	411 417 549	shear bolt		2	
26	N 014 707 4	pan-head screw M 8 X 16		1	
27	N 010 215 13	hexagon-head bolt M 6 X 15	/LL	2	
(27)	999 072 005 09	hexagon-head bolt M 6 X 12	/RL	2	
28	211 805 243	spring washer		2	

- -- E N D -- -

Model	Year	MG	SG	Illustration	Restrictions	Update				
944	85	4	04	404-00		187	10:31	07.04.2005	PORSCHE	PET	PORSCHE

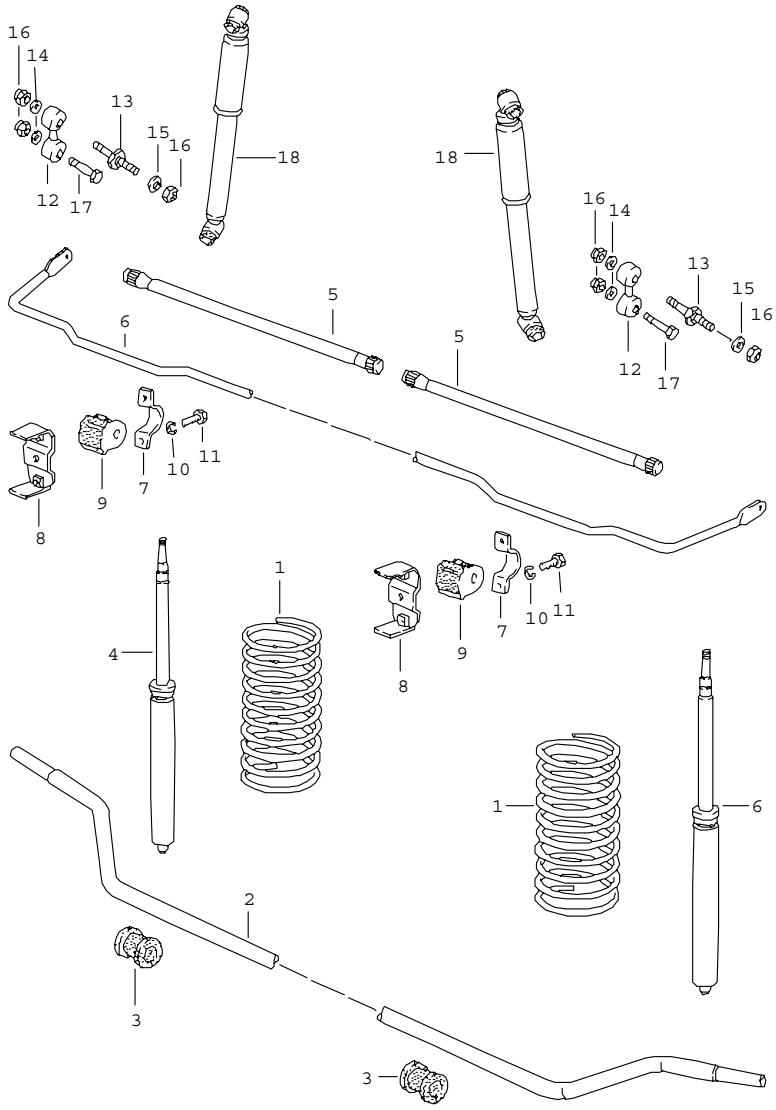

Pos	Part Number	Name	Remarks	Qty	Model
		sport-type running gear			
>>>	944 343 901 00	reconstruction set for cars without M 404 + M 474 comprising:		X	
1	477 411 105 G	coil spring 1 set marked	/V	1	
	954	red			
2	944 343 706 00	stabiliser $ 23 MM	/V	1	
3	477 411 053 J	rubber bush	/V	2	
4	944 343 059 00	vibration damper insert	/V	2	
5	944 333 103 00	torsion bar $ 24,5 MM	/HL	1	
(5)	944 333 104 00	torsion bar $ 24,5 MM	/HR	1	
6	477 511 415	stabiliser $ 20 MM	/H	1	
7	113 411 333	retaining bow	/H	2	
8	477 501 095	clip	/H	2	
9	477 411 313 C	rubber mounting	/H	2	
10	900 027 015 02	lock ring B 8	/H	4	
11	900 075 085 02	hexagon-head bolt M 8 X 20	/H	4	
12	477 511 051 A	stabiliser mounting	/H	2	
13	477 511 515	camber eccentric	/H	2	
14	901 333 143 02	washer	/H	2	
15	N 011 527 12	washer	/H	2	
16	N 022 141 4	lock nut	/H	2	
17	N 010 452 4	hexagon-head bolt	/H	2	
18	944 333 031 00	vibration damper	/H	2	
		- -- E N D -- -			

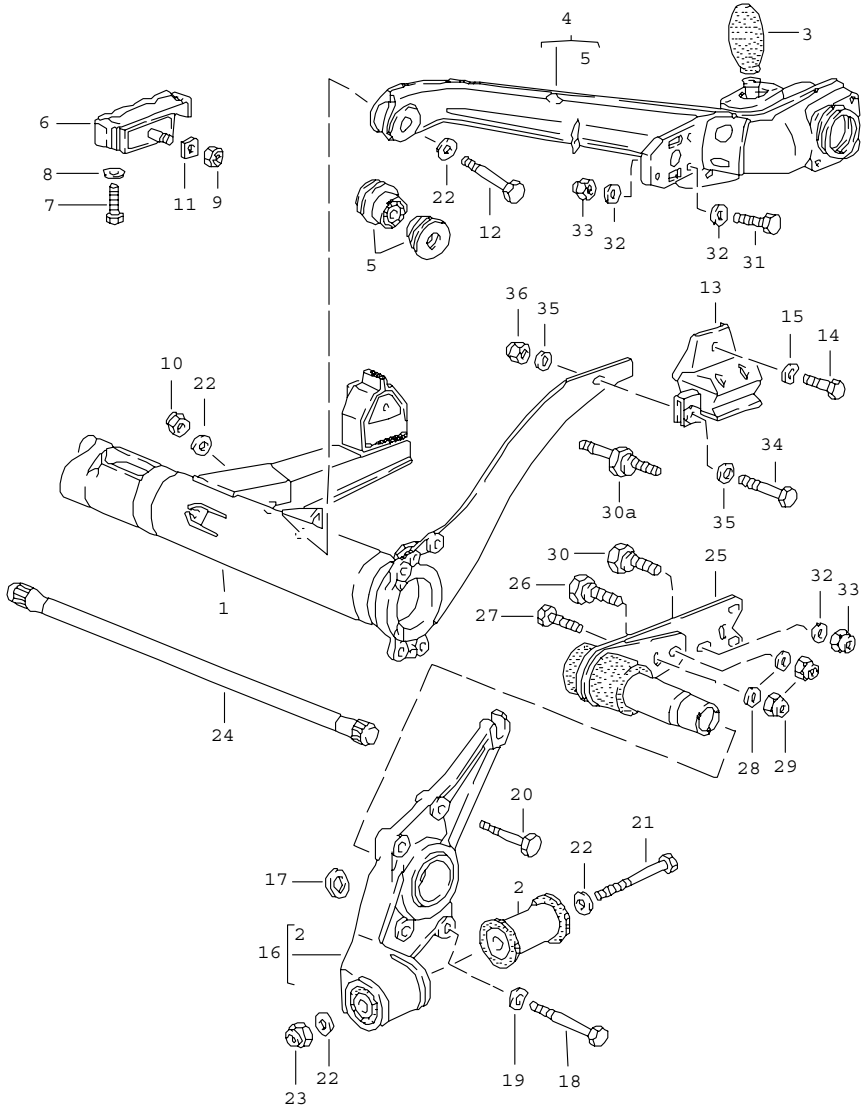

Pos	Part Number	Name	Remarks	Qty	Model
		rear axle carrier rear axle link			
(1)	477 500 053 F	rear axle carrier		1	
2	477 501 069 A	rubber bush		2	
3	311 501 191	rubber stop		2	
4	E 944 331 021 00	rear axle link	/L	1	
(4)	E 944 331 022 00	rear axle link	/R	1	
5	477 501 541	silentbloc		4	
6	477 501 089	mounting		2	
7	900 075 043 02	hexagon-head bolt M 10 X 30		4	
8	900 025 008 09	washer A 10,5		4	
9	N 022 149 2	lock nut VM 10		2	
10	N 021 131 1	lock nut VM 12 X 1,5		2	
11	477 501 697	washer		2	
12	N 010 190 4	hexagon-head bolt M 12 X 90		2	
13	944 331 075 00	supporting mount	/L	1	
(13)	944 331 076 00	supporting mount	/R	1	
14	900 075 040 02	hexagon-head bolt M 10 X 20		8	
15	N 012 230 6	spring washer B 10		8	
16	944 331 059 00	bearing flange	/L	1	
(16)	944 331 060 00	bearing flange	/R	1	
17	477 501 667	washer		2	
18	900 074 248 09	hexagon-head bolt M 10 X 65		2	
19	N 012 230 6	spring washer B 10		8	
20	N 010 455 3	hexagon-head bolt M 10 X 55		6	

Pos	Part Number	Name	Remarks	Qty	Model	Pos	Part Number	Name	Remarks	Qty	Model
21	900 082 059 02	hexagon-head bolt M 12 X 1,5 X 115		2							
22	803 199 347	washer		8							
23	N 022 141 4	lock nut VM 12 X 1,5		2							
24	944 333 115 00	torsion bar 23,5 $	/L	1							
(24)	944 333 116 00	torsion bar 23,5 $	/R	1							
25	477 511 201	strut	/L	1							
(25)	477 511 202	strut	/R	1							
26	911 333 303 00	eccentric screw		2							
27	911 333 305 00	hexagon-head bolt		2							
28	911 333 307 00	washer		4							
29	900 910 092 02	lock nut VM 16 X 1,5		4							
30	477 511 519	camber eccentric		2							
30A	477 511 515	camber eccentric only together with stabiliser $ 14 MM		2							
31	N 010 138 1	hexagon-head bolt M 12 X 1,5 X 38		4							
32	900 025 009 02	washer A 13		8							
33	N 022 141 4	lock nut VM 12 X 1,5		4							
34	900 075 029 09	hexagon-head bolt M 8 X 25		2							
35	900 025 007 02	washer A 8,4		4							
36	900 910 022 09	lock nut VM 8		2							
		- -- E N D -- -									

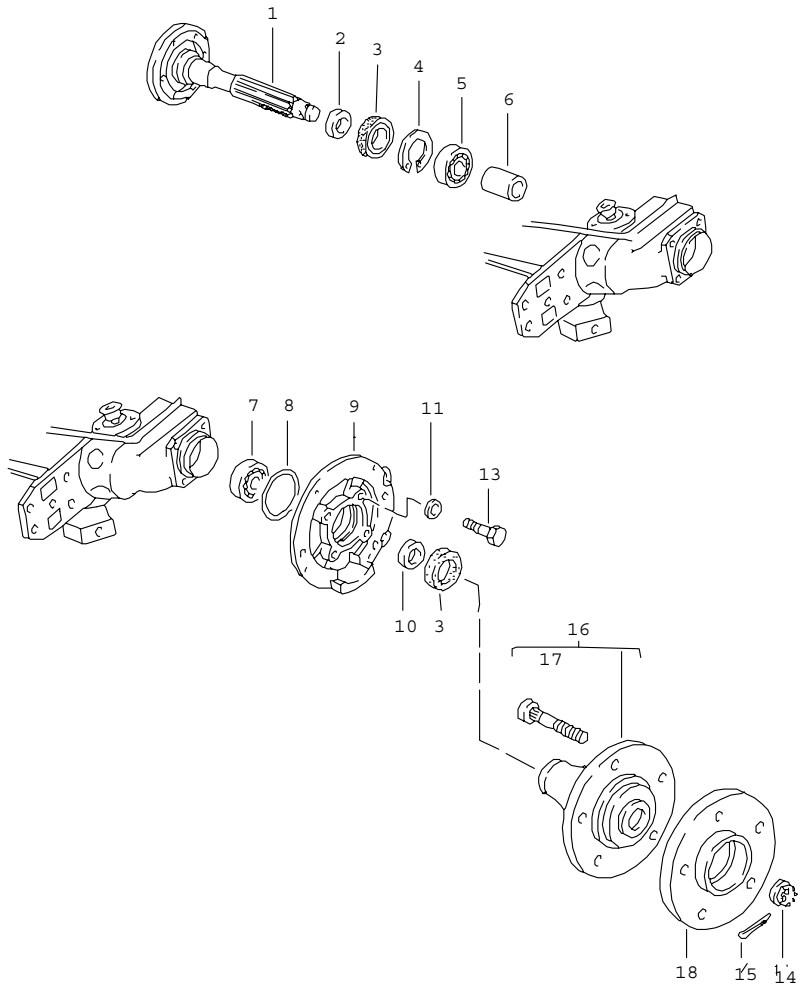

Pos	Part Number	Name	Remarks	Qty	Model
		rear wheel shaft			
1	477 501 263	rear wheel shaft		2	
2	113 501 305	spacer ring inner		2	
3	113 501 315 H	sealing ring		4	
4	937 331 133 00	circlip 62 X 2,00 MM		2	
(4)	937 331 133 01	circlip 62 X 2,05 MM		X	
(4)	937 331 133 02	circlip 62 X 2,10 MM		X	
(4)	937 331 133 03	circlip 62 X 2,15 MM		X	
(4)	937 331 133 04	circlip 62 X 2,20 MM		X	
5	113 501 283	deep-groove ball bearing		2	
6	E 113 501 243	spacer tube		2	
7	E 113 501 277 A	cylindrical-roller bearing		2	
8	113 501 291 B	sealing ring		2	
9	477 609 111	calliper carrier	/L	1	
(9)	E 477 609 112	calliper carrier	/R	1	
10	E 113 501 303	spacer ring outer		2	
11	999 025 076 09	washer 10,2 X 18		8	
13	N 010 450 5	hexagon-head bolt M 10 X 50		8	
14	311 501 221	castle nut		2	
15	900 021 025 02	cotter pin 5 X 45		2	
16	477 501 065	wheel hub		2	
17	911 331 671 00	wheel bolt for 21 MM spacer ring		10	

Pos	Part Number	Name	Remarks	Qty	Model	Pos	Part Number	Name	Remarks	Qty	Model
(17)	901 331 671 01	wheel bolt for 28 MM spacer ring		10							
18	477 501 701	spacer ring 21 MM		2							
(18)	930 331 611 04	spacer ring 28 MM		2							
		- -- E N D -- -									

Model	Year	MG	SG	Illustration	Restrictions	Update			
944	85	5	01	501-10		187	10:32	07.04.2005	PORSCHE PET PORSCHE

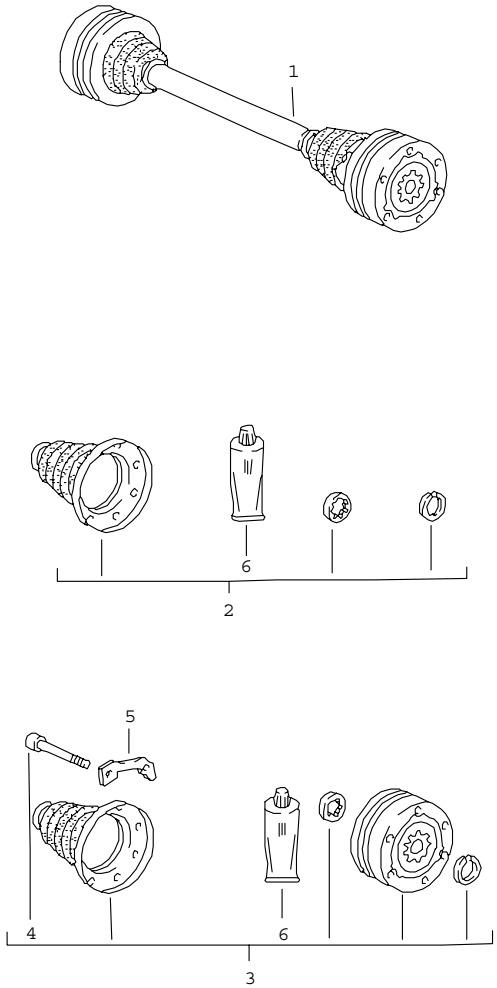

Pos	Part Number	Name	Remarks	Qty	Model
		drive shaft			
1	477 501 103	drive shaft		2	
1	477 501 101 A	drive shaft	/L	1	M 249
1	E 477 501 102 A	drive shaft	/R	1	M 249
2	944 331 903 00	repair kit dust bellows		4	
3	944 331 901 00	repair kit constant-velocity joint		4	
4	893 407 237	pan-head screw		24	
5	944 332 191 00	plate		12	
6	000 043 110 01	grease 1 tube 100 g		X	
		- -- E N D -- -			

Model	Year	MG	SG	Illustration	Restrictions	Update				
944	85	5	02	502-00		187	10:32	07.04.2005	PORSCHE	PET	PORSCHE

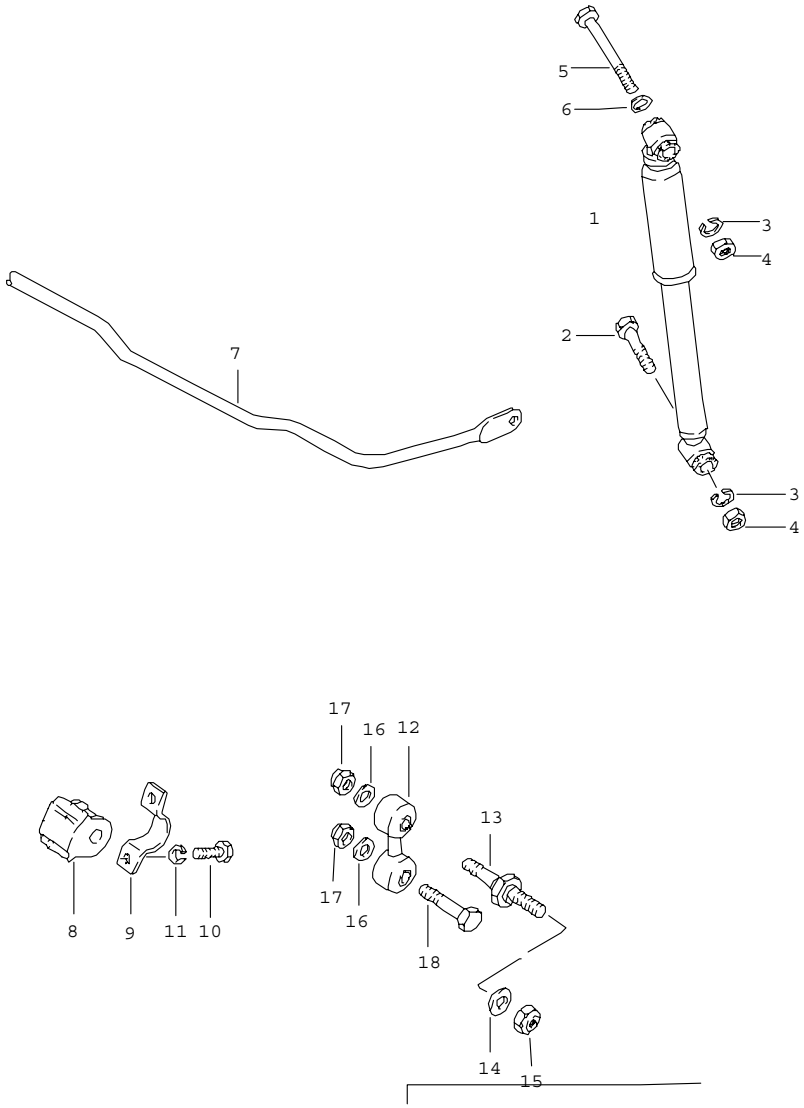

Pos	Part Number	Name	Remarks	Qty	Model
		vibration damper stabiliser			
1	477 513 031 H	vibration damper - fichtel + sachs -		2	
(1)	944 333 031 00	vibration damper - koni -		2	M 474
2	N 010 156 3	hexagon-head bolt M 12 X 1,5 X 70		2	
3	N 012 042 4	lock ring B 12		4	
4	N 011 020 8	hexagon nut M 12 X 1,5		4	
5	900 082 044 02	hexagon-head bolt M 12 X 1,5 X 125		2	
6	043 101 129	washer 12,2 X 22		2	
		stabiliser			
7	477 511 411 A	stabiliser $ 14 MM		1	
8	477 411 313 F	rubber mounting $ 14 MM		2	
9	113 411 333	retaining bow		2	
10	900 075 085 02	hexagon-head bolt M 8 X 20		4	
11	900 027 015 02	lock ring B 8		4	
12	477 511 051 A	stabiliser mounting		2	
13	477 511 515	camber eccentric		2	
14	900 025 009 02	washer A 13		2	
15	N 022 141 4	lock nut VM 12 X 1,5		2	
16	900 025 008 09	washer A 10,5		4	
17	N 022 149 2	lock nut VM 10		4	
18	N 010 452 4	hexagon-head bolt M 10 X 52		2	

Pos	Part Number	Name	Remarks	Qty	Model	Pos	Part Number	Name	Remarks	Qty	Model
		- -- E N D -- -									

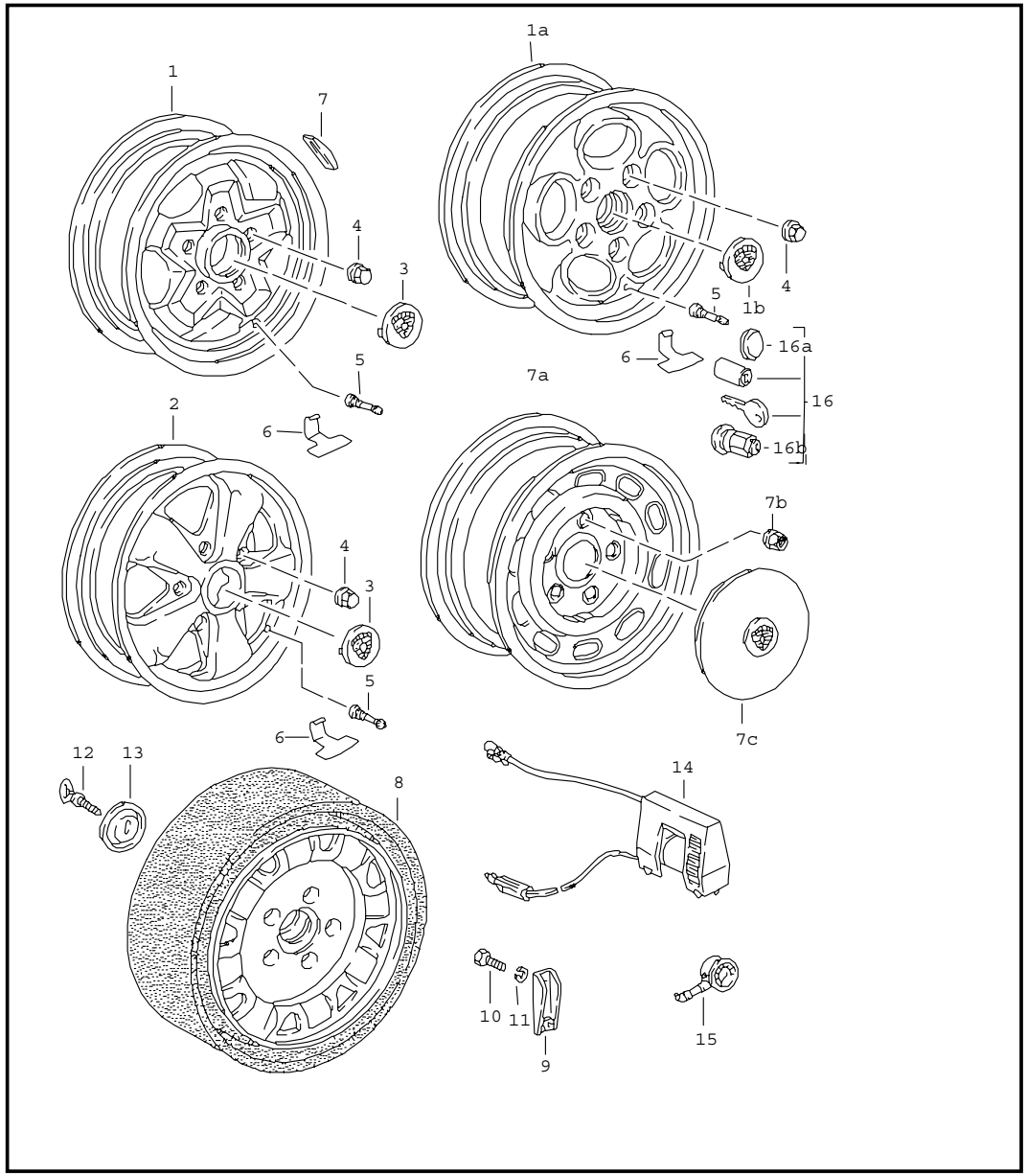

Pos	Part Number	Name	Remarks	Qty	Model
		disc wheel			
1	911 361 023 55	alloy wheel 7J X 15 ET 23,3 cast black star		4	
1A	951 362 104 00	alloy wheel 7J X 15 ET 23,3 cast silver metallic	84-	4	(CH)
1B	928 361 032 01	hub cap		4	
2	911 362 115 00	forged wheel 7J X 16 ET 23,3 forged aluminium alloy rim flange polished black star		4	
(2)	911 362 115 90	perforated disc wheel 7J X 16 ET 23,3 forged aluminium alloy rim flange polished unvarnished		4	
(2)	911 361 020 41	alloy wheel 7J X 15 ET 23,3 forged aluminium alloy rim flange polished black star	/V	2	
(2)	911 361 020 93	alloy wheel 7J X 15 ET 23,3 forged aluminium alloy unvarnished rim flange polished	/V	2	
(2)	911 361 020 42	alloy wheel 8J X 15 ET 10,6 black star rim flange polished	/H	2	
(2)	E 911 361 020 94	alloy wheel 8J X 15 ET 10,6 forged aluminium alloy unvarnished rim flange polished	/H	2	
3	911 361 032 28	hub cap		4	

Pos	Part Number	Name	Remarks	Qty	Model
3	911 361 032 29	hub cap grand prix white		4	
3	911 361 032 30	hub cap platinum-metallic		4	
3	911 361 032 31	hub cap white gold metallic		4	
4	999 182 003 36	wheel nut		20	
5	900 265 001 50	rubber valve $ 15,2		4	
6	911 361 561 01	valve support		4	
7	901 361 410 00	balance stick-on weight 10 G		X	
(7)	901 361 411 00	balance stick-on weight 20 G		X	
(7)	901 361 412 00	balance stick-on weight 30 G		X	
7	901 361 413 00	balance stick-on weight 40 G		X	
(7)	901 361 414 00	balance stick-on weight 50 G		X	
(7)	901 361 415 00	balance stick-on weight 60 G		X	
(7)	901 361 416 00	balance stick-on weight 70 G		X	
(7)	901 361 417 00	balance stick-on weight 80 G		X	
		disc wheel for winter use			
7AU	911 361 022 00	perforated disc wheel steel 5 1/2 J X 15		4	
7B	N 020 112 1	ball seat nut		20	
7C	901 361 031 01	hub cap		4	
		emergency wheel			
8	928 362 030 02	emergency wheel alloy wheel with collapsible tire		1	
9	477 813 191	support		1	
10	E N 010 251 2	hexagon-head bolt M 10 X 18		1	
11	900 027 016 02	lock ring		1	
(12)	914 722 104 10	winged screw M 10 X 75		1	
13	477 813 157	washer		1	
(14)	964 652 053 00	small electric compressor		1	
15	911 722 201 02	tyre pressure gauge		1	
16	928 361 047 03	wheel nut 1 set lockable		1	
16B	928 361 306 03	wheel nut lockable without lock		4	
16A	928 361 310 00	cap		4	
-	928 361 312 01	blank key for wheel nut lockable		X	
		- -- E N D -- -			

Model	Year	MG	SG	Illustration	Restrictions	Update				
944	85	6	02	602-00		187	10:32	07.04.2005	PORSCHE	PET	PORSCHE

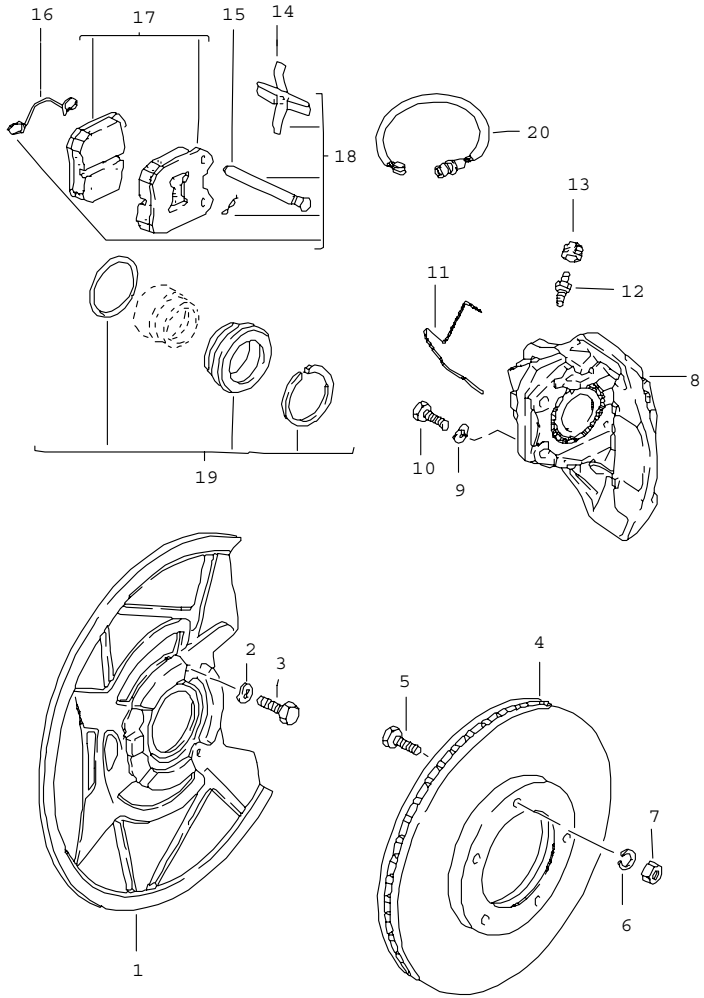

Pos	Part Number	Name	Remarks	Qty	Model
		disc brake front axle			
1	944 351 085 00	cover plate		2	
2	N 012 234 5	spring washer B 7		6	
3	N 010 226 2	hexagon-head bolt M 7 X 10		6	
4	477 405 083 A	brake disc		2	
5	900 075 079 02	hexagon-head bolt M 8 X 22		10	
6	N 012 241 1	spring washer B 8		10	
7	900 076 025 02	hexagon nut M 8		10	
8	E 477 615 109	floating calliper	/L -83	1	
(8)	E 477 615 110	floating calliper	/R -83	1	
(8)	944 351 429 00	floating calliper	/L 84-	1	
(8)	944 351 430 00	floating calliper	/R 84-	1	
9	900 028 014 02	spring washer B 12		4	
10	N 040 108 1	hexagon-head bolt M 12 X 1,5 X 40		4	
11	431 615 169	guide spring		2	
12	928 351 945 00	ventilation valve	-83	2	
(12)	944 351 957 00	ventilation valve	84-	2	
13	211 611 483	dust boot	-83	2	
(13)	944 351 959 00	dust boot	84-	2	
14	* 928 351 935 00	expanding spring		2	
15	* 928 351 936 00	retaining pin		4	
16	* 477 615 112	retaining spring	-83	2	
(16)	928 351 955 00	safety seal	84-	2	
17	944 351 951 02	set of brake pads without asbestos		1	
18	944 351 952 01	mounting parts		1	

Model	Year	MG	SG	Illustration	Restrictions	Update			
944	85	6	02	602-00		187	10:32	07.04.2005	PORSCHE PET PORSCHE

Pos	Part Number	Name	Remarks	Qty	Model	Pos	Part Number	Name	Remarks	Qty	Model
19	928 351 941 00	set of seals		1							
20	944 612 211 00	warning contact		2							
-	944 341 705 00	cable holder		1							
-	944 612 635 00	clip		4							
		- -- E N D -- -									

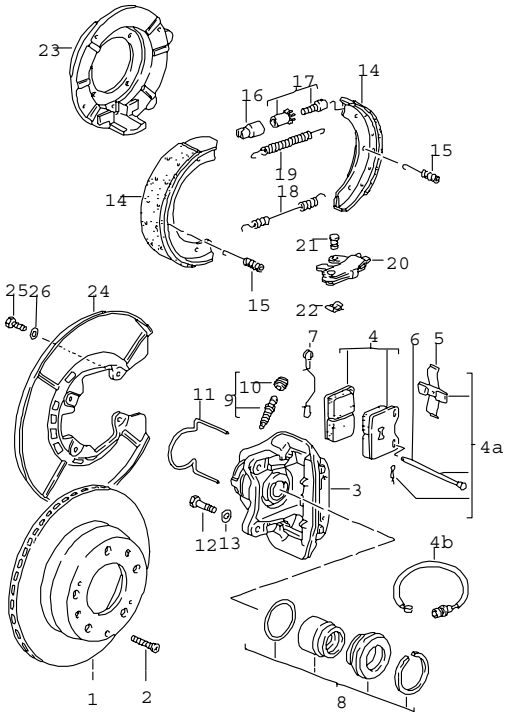

Pos	Part Number	Name	Remarks	Qty	Model
		disc brake rear axle			
1	944 352 041 02	brake disc		2	
2	N 033 167 1	countersunk-head screw M 6 X 12		2	
3	944 352 429 00	floating calliper	/L	1	
(3)	944 352 430 00	floating calliper	/R	1	
4	944 352 951 02	set of brake pads without asbestos		1	
4A	944 352 952 00	mounting parts		1	
4B	944 612 211 01	warning contact	84-	2	
-	944 331 705 00	cable holder	84-	1	
5	* 928 352 935 00	expanding spring		2	
6	* 928 351 936 00	retaining pin		4	
7	E 928 352 937 00	retaining spring	-83	2	
(7)	944 352 963 00	safety seal	84-	2	
8	928 352 941 00	set of seals		2	
9	901 352 977 10	ventilation valve		2	
10	901 351 927 10	dust boot		2	
11	944 352 953 00	guide spring	/L -83	1	
(11)	E 944 352 954 00	guide spring	/R -83	1	
(11)	E 944 352 954 00	guide spring	/L 84-	1	
(11)	944 352 953 00	guide spring	/R 84-	1	
12	900 082 077 02	hexagon-head bolt M 12 X 1,5 X 37		4	
13	900 028 014 02	spring washer B 12		4	
		handbrake			
14	996 352 993 00	repair kit without asbestos		4	
15	928 352 957 02	compression spring		4	
16	911 352 944 00	bush		2	

Pos	Part Number	Name	Remarks	Qty	Model
17	911 352 098 00	adjusting screw		2	
18	901 352 954 10	return spring		2	
19	901 352 932 10	return spring		2	
20	951 352 090 00	expanding bow		2	
21	477 609 459	bolt		2	
22	N 900 588 01	lock		2	
23	477 609 111	calliper carrier	/L	1	
23	E 477 609 112	calliper carrier	/R	1	
24	937 352 801 00	protective plate		2	
25	999 072 005 09	hexagon-head bolt M 6 X 12		8	
26	N 012 226 5	spring washer B 6		8	
		- -- E N D -- -			

Model	Year	MG	SG	Illustration	Restrictions	Update				
944	85	6	04	604-00		187	10:33	07.04.2005	PORSCHE	PET	PORSCHE

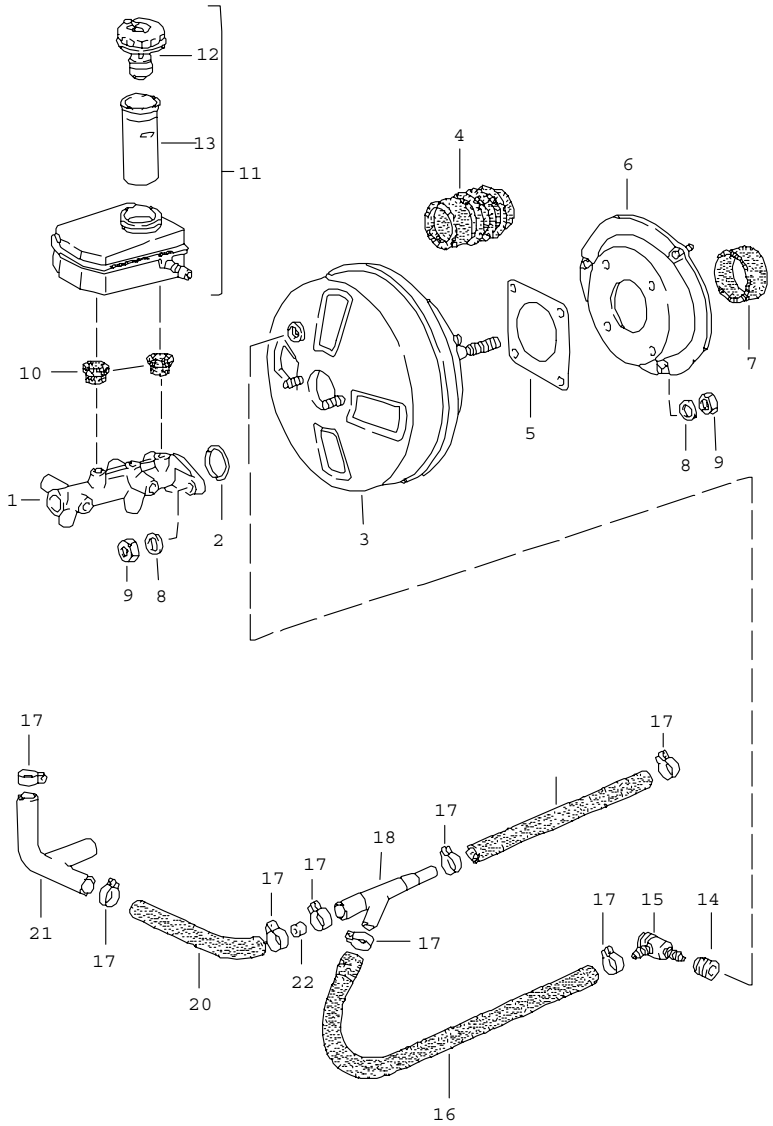

Pos	Part Number	Name	Remarks	Qty	Model
		brake master cylinder brake booster expansion tank			
1	944 355 011 00	brake master cylinder - girling -		1	
1	944 355 011 01	brake master cylinder - ate -		1	
		stop light switch see group 9/06/00			
2	251 611 243	sealing ring		1	
3	944 355 023 00	brake booster - girling -		1	
3	944 355 023 11	brake booster - ate -		1	
4	944 355 323 00	bellows		1	
5	477 611 951	gasket		1	
6	477 611 945 D	intermediate piece		1	
7	477 611 969 D	gasket		1	
8	900 025 007 02	washer		9	
9	900 076 025 02	hexagon nut M 8		9	
10	911 355 922 00	plug		2	
11	477 611 303 B	expansion tank		1	
12	477 611 351 B	cover with float		1	
13	477 611 385 A	bush		1	
14	911 355 921 00	rubber seal		1	
15	191 611 933 F	check valve		1	
(15)	477 611 933 A	check valve		1	(J)
(15)	477 611 933 A	check valve		1	M 573
16	944 355 401 00	elbow		1	
17	999 512 346 00	hose clamp		9	
18	035 133 753 A	venturi tube		1	

Pos	Part Number	Name	Remarks	Qty	Model
-	944 110 365 01	support for venturi tube		1	
-	999 239 011 40	hose		1	
19	-	140 MM			
20	944 110 361 02	hose		1	
(20)	944 110 361 03	hose		1	M 573
21	944 110 363 02	connecting piece		1	
22	944 110 241 01	bush		1	
		- -- E N D -- -			

Pos	Part Number	Name	Remarks	Qty	Model

Model	Year	MG	SG	Illustration	Restrictions	Update	10:33	07.04.2005	PORSCHE PET PORSCHE
944	85	6	04	604-05		187			

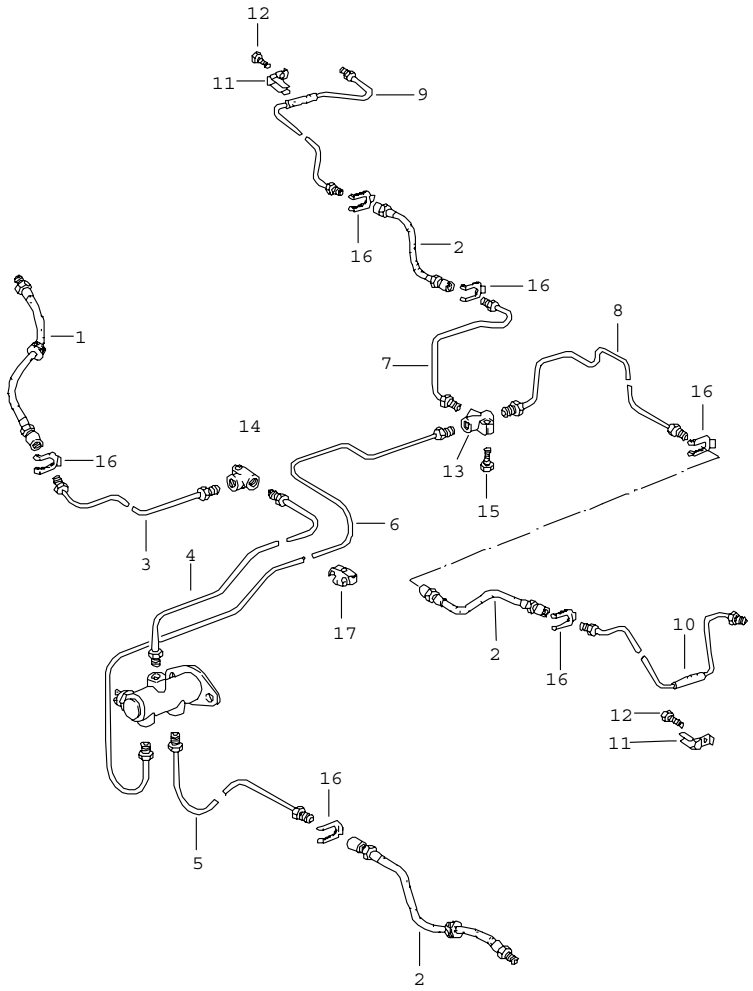

Pos	Part Number	Name	Remarks	Qty	Model
		brake lines			
1	477 611 071 B	brake hose	/V	2	
2	944 355 081 01	brake hose	/H	2	
3	477 611 724 A	brake line	/R	1	
4	937 355 630 00	brake line	/R	1	
5	944 355 029 01	brake line	/L	1	
6	937 355 631 00	brake line		1	
7	937 355 632 00	brake line	/R	1	
8	944 355 033 00	brake line	/L	1	
9	477 611 782 A	brake line	/R	1	
10	E 477 611 781 A	brake line	/L	1	
11	477 611 783	support		2	
12	N 010 210 13	hexagon-head bolt		2	
13	914 355 667 00	distributor		1	
14	901 355 615 00	angled pipe		1	
15	N 011 116 5	hexagon nut		1	
16	113 611 715 A	brake hose bracket		6	
17	811 611 797	clip		14	
		- -- E N D -- -			

Model	Year	MG	SG	Illustration	Restrictions	Update		
944	85	6	98	REP		187	9:41	13.04.2005

Pos	Part Number	Name	Remarks	Qty	Model
		repair kits			
>>	> 944 351 951 02	set of brake pads without asbestos comprising: brake pad	/V	1 4	
>>	> 944 351 952 01	mounting parts for set of brake pads comprising: expanding spring retaining pin safety seal	/V	1 2 4 2	
>>	> 928 351 941 00	set of seals for floating calliper comprising: sealing ring clamping washer protection cap	/V	2 1 1 1	
>>	> 944 352 951 02	set of brake pads without asbestos comprising: brake pad	/H	1 4	
>>	> 944 352 952 00	mounting parts for set of brake pads comprising: expanding spring retaining pin safety seal	/H	1 2 4 2	
>>	> 928 352 941 00	set of seals for floating calliper comprising: gasket protection cap clamping washer slide	/H	2 1 1 1 2	
>>	> 944 355 011 00	brake master cylinder for brake master cylinder - girling -		1	
>>	> 944 355 911 01	repair kit for brake master cylinder - ate -		1	
		- -- E N D -- -			

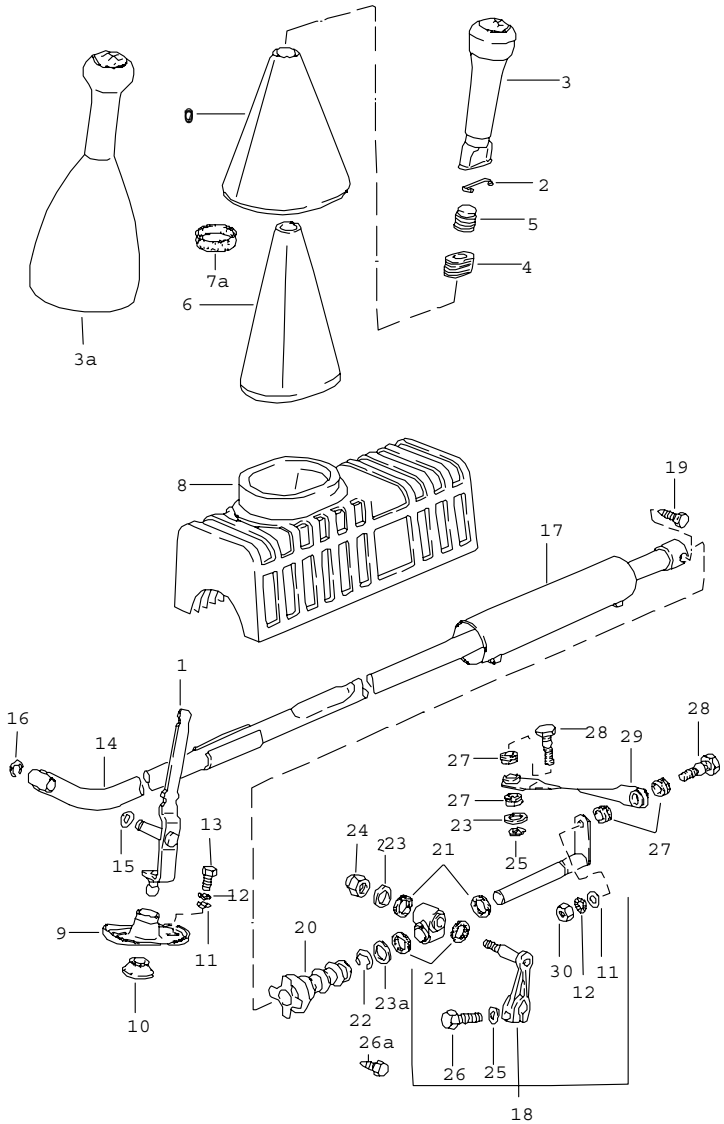

Pos	Part Number	Name	Remarks	Qty	Model
		shift mechanism manual transmission			
1	477 711 205 D	gearshift lever		1	
2	477 711 269	retainer spring		1	
3	477 711 289 A	gearshift knob leatherette		1	
	01C	black			
3A	931 424 075 00	gearshift knob with boot leather		1	M 416
	1AJ	black			
	4RB	brown			
4	477 711 219	vibration damper		1	
(4)	931 424 111 00	vibration damper		1	M 416
5	477 711 217	vibration damper		1	
(5)	931 424 110 00	vibration damper		1	M 416
6	477 711 270 B	inner sleeve		1	
7	944 424 023 00	boot		1	
	05T	black			
7A	477 711 257	rubber ring		1	
8	477 711 239	sound absorber		1	
9	944 424 229 00	bearing bracket		1	
10	944 424 231 01	bearing shell		1	
11	900 025 007 02	washer A 8,4		3	
12	N 012 108 2	serrated lock washer 8,4		3	
13	N 010 237 6	hexagon-head bolt M 8 X 12		2	
14	944 424 019 00	gear shift rod		1	
15	900 028 005 02	spring washer A 10		1	
16	900 116 005 02	lock washer		1	

Pos	Part Number	Name	Remarks	Qty	Model
17	477 711 285	protective tube		1	
18	944 424 013 02	intermediate shift lever		1	
19	823 711 833	hexagon-head bolt		1	
20	477 711 159 B	bellows		1	
21	477 711 149	sealing ring		4	
22	N 012 415 1	circlip 15 X 1		1	
23	311 827 181	washer		2	
23A	477 711 139 A	washer		1	
24	803 253 111	lock nut M 8		1	
25	N 012 241 11	spring washer B 8		2	
26A	443 711 189 A	hexagon-head bolt		1	
27	477 711 155 A	sealing ring		4	
28	477 711 147 A	ball pin		2	
29	944 424 141 00	joint rod		1	
30	N 011 008 8	hexagon nut M 8		1	
		- -- E N D -- -			

Pos	Part Number	Name	Remarks	Qty	Model

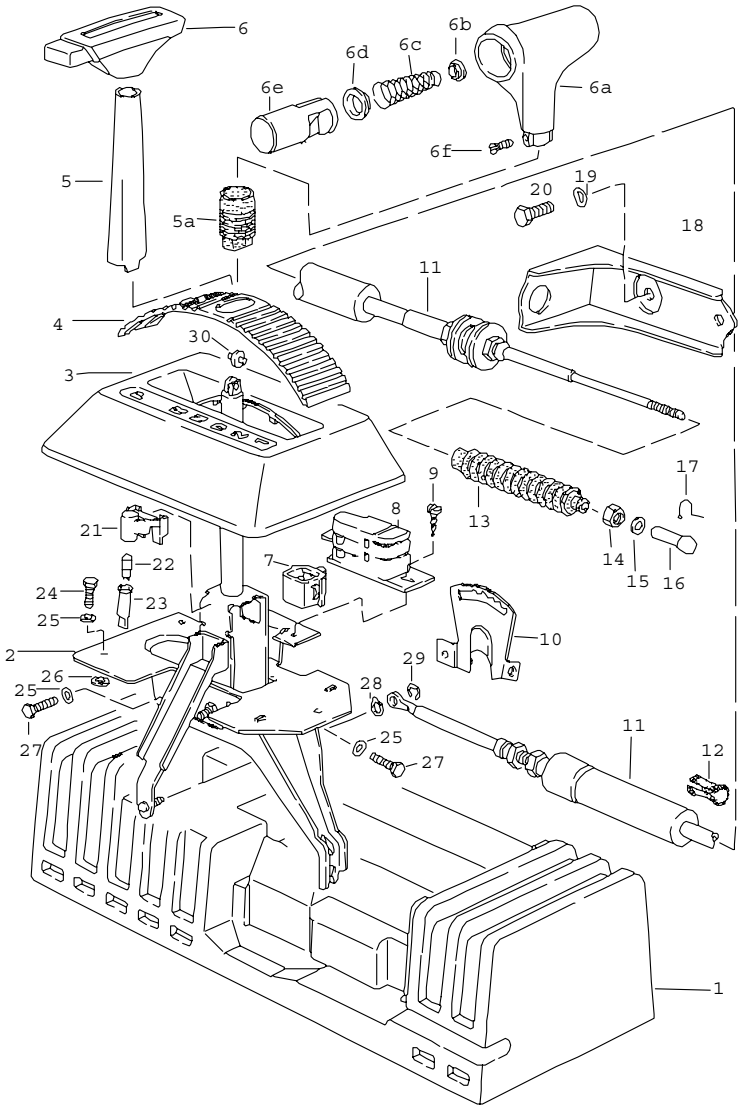

Pos	Part Number	Name	Remarks	Qty	Model
		shift mechanism automatic transmission			
1	944 426 182 00	sound absorber		1	
2	477 713 025 A	shift mechanism	82	1	
(2)	944 426 025 02	shift mechanism	83-	1	
3	477 713 111 A	cover		1	
	1DB	black			
	4RB	brown			
4	477 713 277	cover strip		1	
5	477 713 279	cover	82	1	
5A	944 426 279 00	cover	83-	1	
	01C	black			
	89S	brown			
6	447 713 139 A	selector knob	82	1	
	01C	black			
6A	928 426 077 00	selector knob	83-	1	
	1AJ	black			
	4RB	brown			
6B	922 424 203 00	concave washer	83-	1	
6C	922 424 176 03	compression spring	83-	1	
6D	922 424 201 00	concave washer	83-	1	
6E	928 426 174 01	adjusting lever	83-	1	
6F	N 033 165 1	countersunk-head screw M 4 X 8	83-	2 1	
7	171 927 145 A	contacts		1	
8	311 927 147 B	support for contact		1	
9	N 013 968 1	tapping screw B 4,8 X 13		2	
10	944 426 109 01	locking segment		1	
11	477 713 265 C	cable		1	
12	431 609 781	breather hose		2	

Pos	Part Number	Name	Remarks	Qty	Model	Pos	Part Number	Name	Remarks	Qty	Model
13	477 609 715	sealing sleeve		1							
14	N 011 005 14	hexagon nut M 5		1							
15	900 151 027 02	washer B 5,3		1							
16	911 423 147 00	ball socket		1							
17	900 169 014 02	securing clip		1							
18	477 713 281 A	retaining bracket		1							
19	900 027 015 02	lock ring B 8		2							
20	900 075 085 02	hexagon-head bolt M 8 X 20		2							
21	321 713 855 A	bulb holder		1							
22	900 631 132 90	bulb 12V 1,2W		1							
23	111 919 243	bulb holder		1							
24	900 378 030 09	hexagon-head bolt M 6 X 20		3							
25	N 012 226 5	spring washer B 6		5							
26	N 900 067 01	washer 6,4		3							
27	N 010 215 13	hexagon-head bolt M 6 X 15		2							
28	E 473 867 471	sealing ring		1							
29	N 012 325 1	lock washer		1							
30	321 713 137	roller		1							
		- -- E N D -- -									

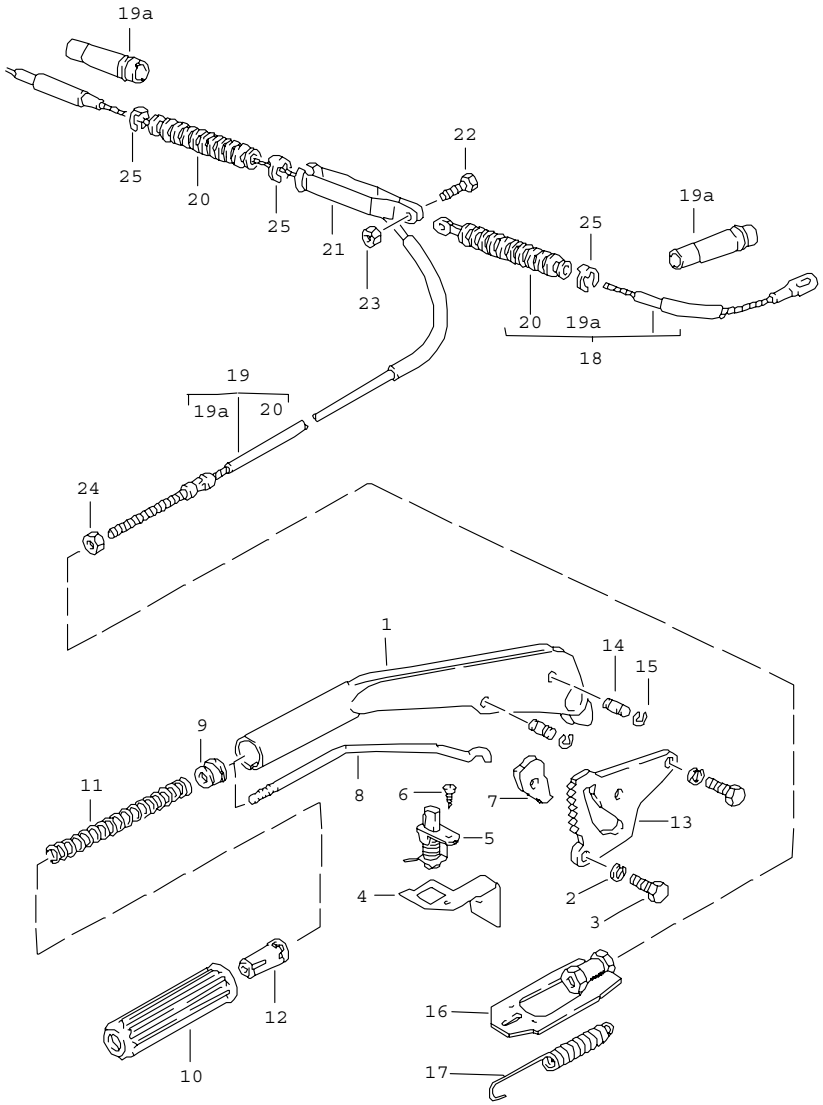

Pos	Part Number	Name	Remarks	Qty	Model
		parking-brake lever			
(1)	E 944 424 052 00	parking-brake lever		1	
2	900 027 015 02	lock ring B 8		2	
3	N 010 239 11	hexagon-head bolt M 8 X 18		2	
4	477 711 317	support	/LL	1	
(4)	E 478 711 318	support	/RL	1	
5	968 613 601 00	contact switch		1	
6	N 013 957 5	tapping screw B 3,5 X 9,5		1	
7	823 711 321	pawl		1	
8	481 711 325	rod		1	
9	481 711 327	spring sleeve		1	
10	839 711 327	grip		1	
	041	black			
11	191 711 329	pressure spring		1	
12	113 711 333 B	push button		1	
	01C	black			
(13)	944 424 252 00	tooth sector		1	
14	251 711 341 A	pin	-83	2	
(14)	944 424 352 00	pin	84-	1	
14	251 711 341 A	pin	84-	1	
-	900 910 022 09	lock nut VF M 8	84-	1	
15	900 116 005 02	lock washer		4	
16	477 711 973	connecting piece		1	
17	477 711 975	return spring		1	
18	477 609 719 C	parking-brake cable 925 MM		1	
19	477 609 720 C	parking-brake cable 1975 MM		1	

Pos	Part Number	Name	Remarks	Qty	Model	Pos	Part Number	Name	Remarks	Qty	Model
19A	477 609 723	guide tube		2							
20	477 609 715	sealing sleeve		2							
-	N 020 906 3	tie-wrap 6,5 X 450		2							
21	477 711 965	compensating bow		1							
22	900 378 030 09	hexagon-head bolt M 6 X 20		1							
23	900 910 012 02	lock nut M 6		1							
24	900 076 010 02	hexagon nut M 6		1							
25	999 166 027 02	lock 8		3							
-	477 711 979	retaining strap		2							
-	N 013 530 3	rivet		2							
-	N 013 510 1	compression rivet		2							
		- -- E N D -- -									

Model	Year	MG	SG	Illustration	Restrictions	Update				
944	85	7	02	702-00		187	10:34	07.04.2005	PORSCHE	PET	PORSCHE

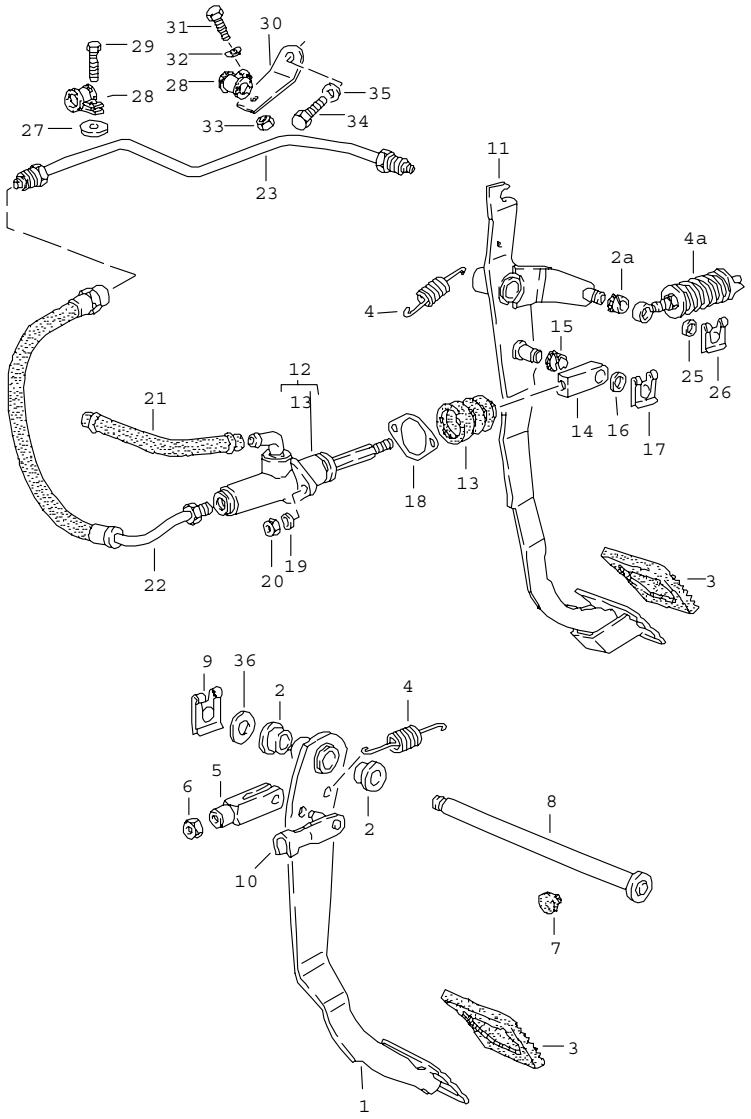

Pos	Part Number	Name	Remarks	Qty	Model
		pedals left-hand drive			
1	477 721 141	brake pedal		1	
(1)	477 723 141	brake pedal		1	AUT.
2	443 721 153 A	bearing sleeve		4	
3	823 721 173	cap		2	
(3)	827 723 173	cap		1	AUT.
4	321 721 191	return spring		2	
4A	477 721 353 A	clutch power spring		1	
5	803 721 213	clevis		1	
6	N 011 010 6	hexagon nut M 10		1	
7	999 703 183 40	buffer		1	
8	843 721 309	bolt 12 X 185 X 180		1	
(8)	N 023 151 2	bolt 12 X 144 X 139		1	AUT.
9	N 012 653 1	lock		1	
10	N 023 476 1	bolt 8 X 32		1	
11	477 721 315 D	clutch pedal		1	
12	477 721 171	clutch master cylinder		1	
13	928 423 908 00	bellows		1	
14	928 423 517 00	clevis		1	
15	999 924 002 40	plain bearing		1	
16	900 025 008 09	washer A 10,5		1	
17	999 166 034 02	lock		1	
18	928 423 191 00	gasket		1	
19	900 027 015 02	lock ring B 8		2	
20	900 076 025 02	hexagon nut M 8		3	

Model	Year	MG	SG	Illustration	Restrictions	Update				
944	85	7	02	702-00		187	10:34	07.04.2005	PORSCHE PET PORSCHE	

Pos	Part Number	Name	Remarks	Qty	Model	Pos	Part Number	Name	Remarks	Qty	Model
-	999 181 021 50	hose 12,5 X 7,5		*							
21	-	220 MM		1							
22	477 721 189 A	clutch hose		1							
23	944 423 091 00	clutch pipeline		1							
24	999 924 001 40	bush		1							
25	900 025 007 02	washer A 8,4		1							
26	N 900 470 01	lock washer		1							
27	N 900 067 01	washer		1							
28	N 020 680 1	clamp		1							
29	N 010 264 4	hexagon-head bolt M 5 X 20		1							
30	944 423 193 01	support		1							
31	N 010 207 6	hexagon-head bolt M 5 X 12		1							
32	N 012 225 2	spring washer B 5		1							
33	N 011 005 14	hexagon nut M 5		1							
34	N 010 239 11	hexagon-head bolt M 8 X 18		1							
35	900 025 007 02	washer		1							
36	311 955 255	washer		1							
		- -- E N D -- -									

Model	Year	MG	SG	Illustration	Restrictions	Update				
944	85	7	02	702-05		187	10:34	07.04.2005	PORSCHE	PET	PORSCHE

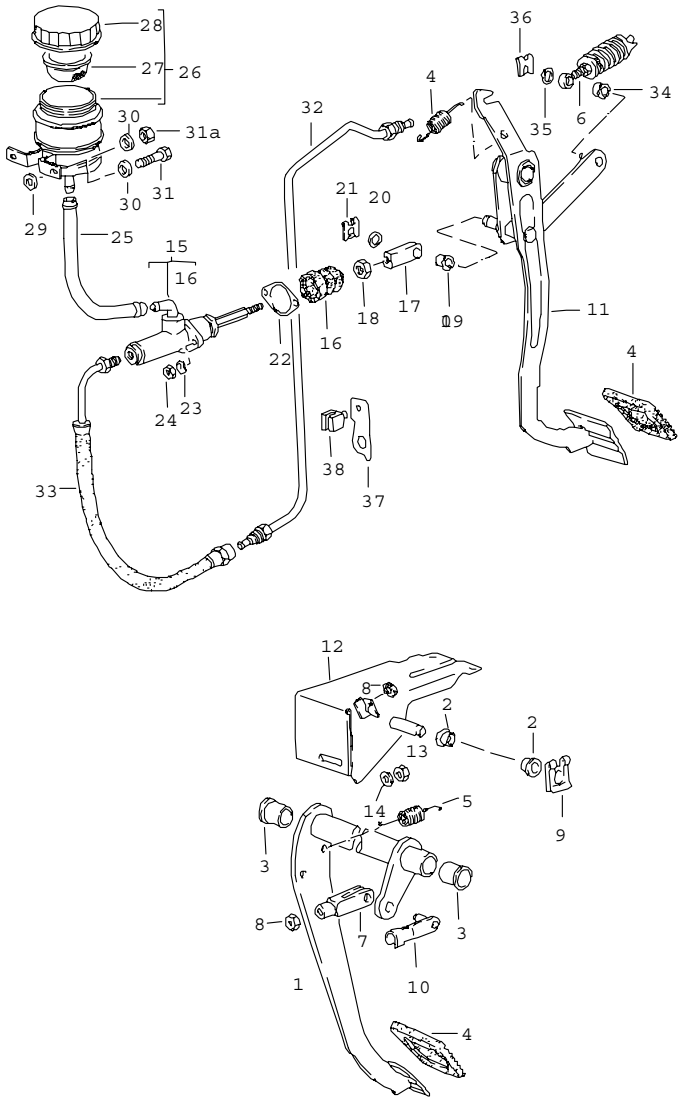

Pos	Part Number	Name	Remarks	Qty	Model
		pedals right-hand drive			
1	E 478 721 141	brake pedal		1	
(1)	478 723 141	brake pedal		1	AUT.
2	443 721 153 A	bearing sleeve		2	
3	478 721 153	bearing sleeve		2	
4	823 721 173	cap		2	
(4)	827 723 173	cap		1	AUT.
5	321 721 191	return spring		2	
6	477 721 353 A	clutch power spring		1	
7	803 721 213	clevis		1	
8	N 011 010 6	hexagon nut M 10		1	
9	N 012 653 1	lock		1	
10	N 023 476 1	bolt 8 X 32		1	
11	478 721 315 A	clutch pedal		1	
12	478 721 113 A	bracket		1	
13	900 076 025 02	hexagon nut M 8		3	
14	N 012 229 3	spring washer A 8		3	
15	478 721 171	clutch master cylinder		1	
16	928 423 908 00	bellows		1	
17	478 721 179	intermediate piece		1	
18	N 011 118 14	hexagon nut BM 8		1	
19	999 924 002 40	bush		1	
20	900 025 008 09	washer A 10,5		1	
21	999 166 034 02	lock		1	
22	928 423 191 00	gasket		1	

Pos	Part Number	Name	Remarks	Qty	Model	Pos	Part Number	Name	Remarks	Qty	Model
23	N 012 229 3	spring washer A 8		2							
24	900 076 025 02	hexagon nut M 8		2							
25	478 721 219	connecting hose F >>94DN4 00050		1							
(25)	999 181 021 50	hose F 94DN4 00051>>		1							
26	944 423 210 00	expansion tank		1							
27	211 611 381 B	strainer		1							
28	477 611 361	cover		1							
29	052 109 135	spacer sleeve		2							
30	N 012 226 5	spring washer B 6		2							
31	900 075 014 02	hexagon-head bolt M 6 X 15		2							
31A	900 076 010 02	hexagon nut M 6		2							
32	945 423 091 01	clutch tube	-84	1							
(32)	945 423 091 02	clutch tube	85-	1							
33	478 721 189	clutch hose		1							
34	999 924 001 40	bush		1							
35	900 025 007 02	washer A 8,4		1							
36	N 900 470 01	lock washer		1							
37	945 423 193 00	support	-84	1							
(37)	945 423 193 01	support	85-	1							
38	999 591 578 40	clip		1							
		- -- E N D -- -									

Model	Year	MG	SG	Illustration	Restrictions	Update	10:35	07.04.2005	PORSCHE PET PORSCHE
944	85	7	02	702-10		187			

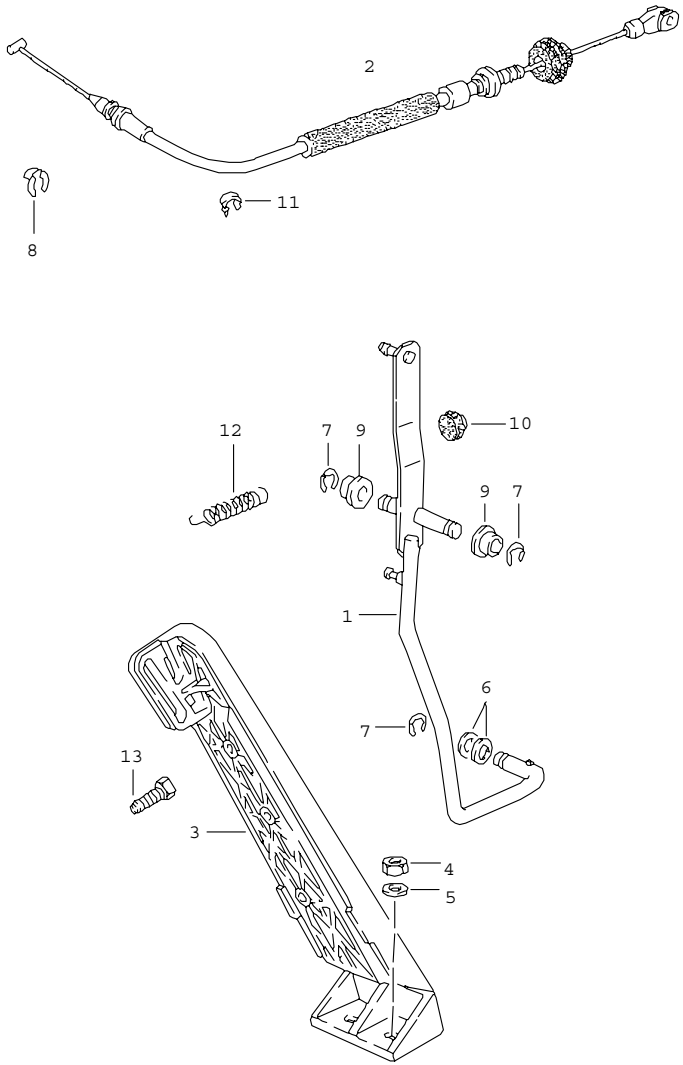

Pos	Part Number	Name	Remarks	Qty	Model
		accelerator pedal accelerator cable for cars with manual transmission			
1	944 423 031 00	accelerator control	/LL	1	
(1)	945 423 031 01	accelerator control	/RL	1	
(1)	944 423 034 00	accelerator control	/LL	1	M 454
2	944 423 023 02	accelerator cable	/LL	1	
(2)	945 423 023 02	accelerator cable	/RL	1	
3	827 723 511 A	accelerator pedal		1	
4	900 076 010 02	hexagon nut M 6		2	
5	803 817 121	washer		2	
6	900 025 038 40	washer		2	
7	N 012 436 2	lock washer		3	
8	N 012 323 1	circlip		1	
9	477 721 543	bearing sleeve		2	
10	999 703 183 40	buffer		1	
11	477 971 851	cable clip	/RL	1	
12	944 423 831 00	spring		1	
13	944 423 731 00	adjusting screw		1	
		- -- E N D -- -			

Model	Year	MG	SG	Illustration	Restrictions	Update			
944	85	7	02	702-15		187	10:35	07.04.2005	PORSCHE PET PORSCHE

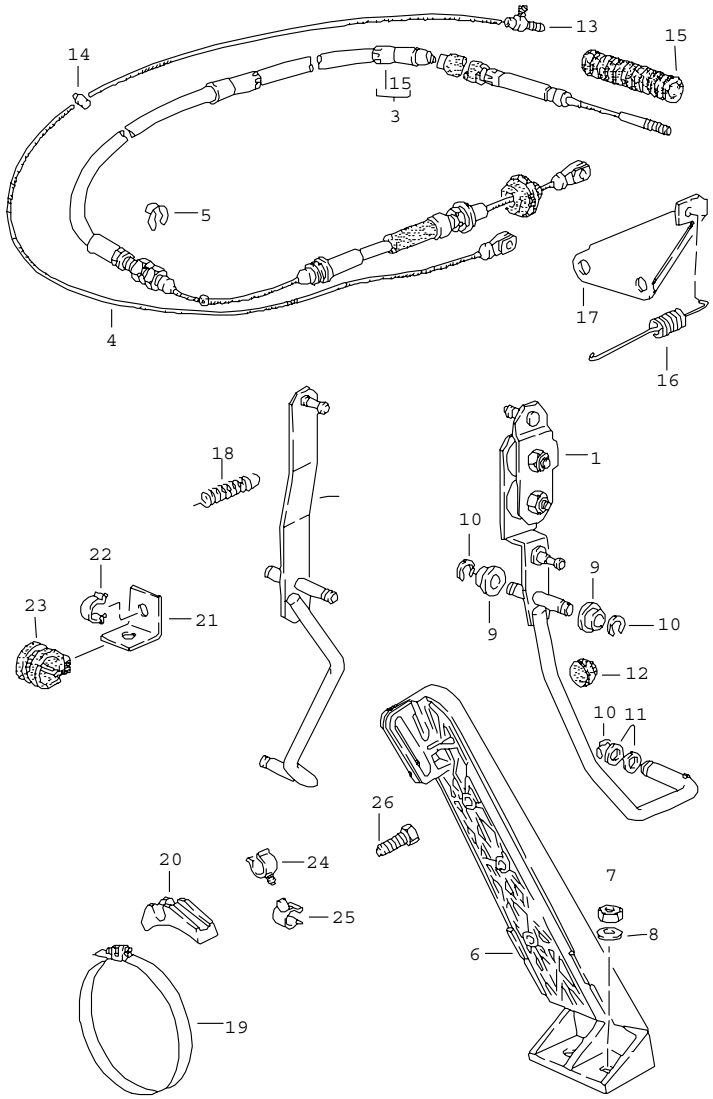

Pos	Part Number	Name	Remarks	Qty	Model
		accelerator pedal accelerator cable for cars with automatic transmission			
1	944 423 033 00	accelerator control	/LL	1	
2	945 423 031 01	accelerator control	/RL	1	
3	944 423 071 03	accelerator cable	/LL	1	
(3)	945 423 071 03	accelerator cable	/RL	1	
4	944 423 973 02	cable	/LL	1	
(4)	945 423 973 02	cable	/RL	1	
5	N 012 323 1	circlip		1	
6	827 723 511 A	accelerator pedal		1	
7	900 076 010 02	hexagon nut M 6		2	
8	803 817 121	washer		2	
9	477 721 543	bearing sleeve		2	
10	N 012 436 2	lock washer		3	
11	900 025 038 40	washer		2	
12	999 703 183 40	buffer		1	
13	477 723 601	nipple		1	
14	477 723 611	nipple		1	
15	311 713 269 A	sealing sleeve		1	
16	477 723 563 C	tension spring		1	
17	944 423 141 00	support		1	
18	944 423 833 00	spring		1	
19	999 512 350 02	hose clamp		1	
20	477 723 567	support		1	
21	477 971 881 A	retaining bracket		1	
22	477 971 851	cable clip		1	
23	999 511 116 02	clamp		X	
24	E 999 591 573 40	hose holder		3	

Pos	Part Number	Name	Remarks	Qty	Model	Pos	Part Number	Name	Remarks	Qty	Model
25	999 591 572 40	hose holder		3							
26	944 423 731 00	adjusting screw		1							
		- -- E N D -- -									

Model	Year	MG	SG	Illustration	Restrictions	Update			
944	85	8	01	801-00		187	10:35	07.04.2005	PORSCHE PET PORSCHE

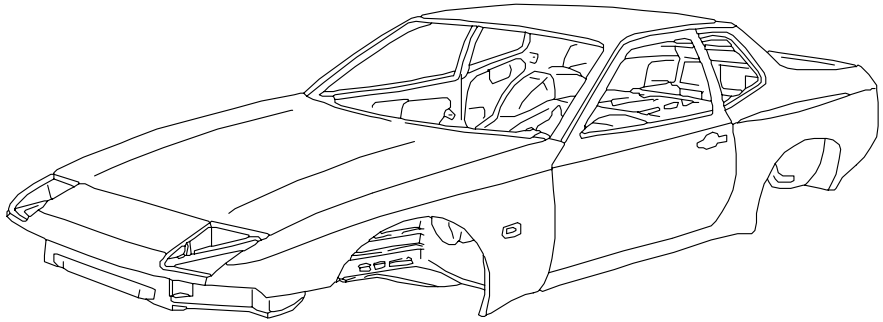

Pos	Part Number	Name	Remarks	Qty	Model
		body in white prime coated sealed with underbody protection bodyshells can only be delivered of the current model year			
1	E 944 500 901 00	body in white	/LL	1	
(1)	E 944 500 901 01	body in white	/LL	1	M 650
(1)	E 945 500 901 00	body in white	/RL	1	
(1)	E 945 500 901 01	body in white	/RL	1	M 650
		- -- E N D -- -			

Model	Year	MG	SG	Illustration	Restrictions	Update	10:35	07.04.2005	PORSCHE PET PORSCHE
944	85	8	01	801-05		187			

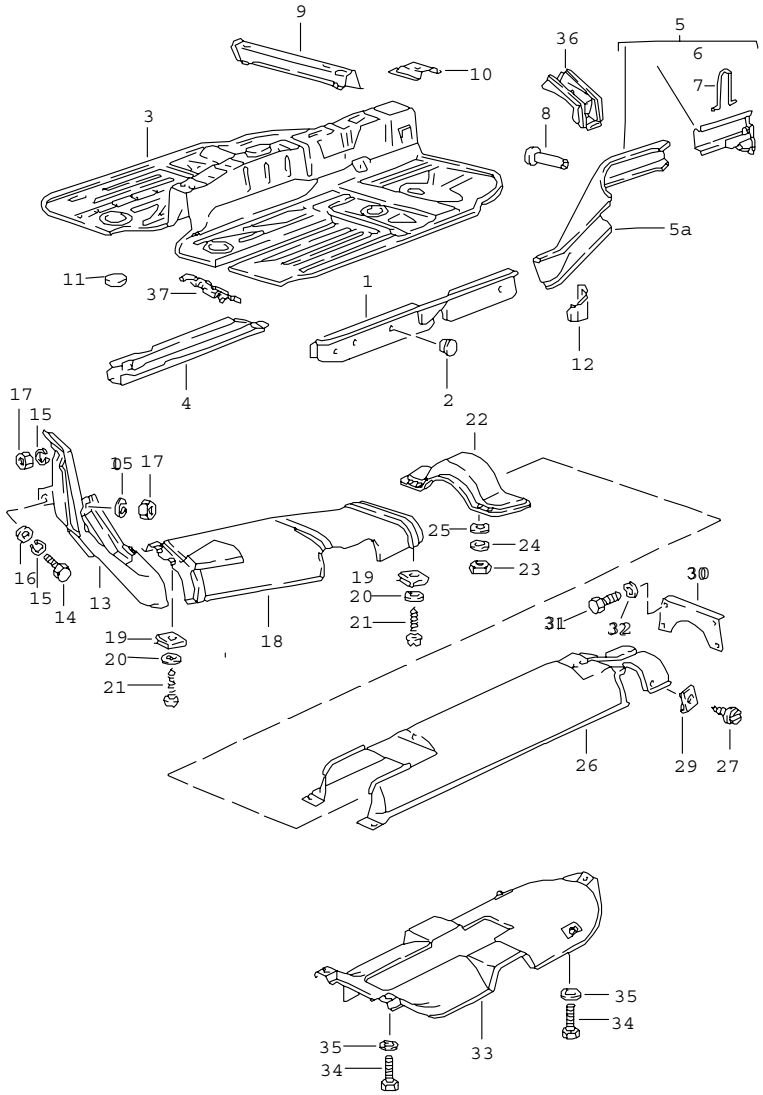

0

Pos	Part Number	Name	Remarks	Qty	Model
		side member cover plate			
1	477 803 103 A	side member centre	/L	1	
(1)	478 803 104 B	side member centre	/R	1	
2	999 703 119 40	plug side member		2	
(2)	803 803 583	drain bush		2	
(2)	803 803 583 A	cap		10	
3	944 501 501 00	floor section centre		1	
4	477 803 283	side member floor section centre		2	
5	477 803 105 A	side member use also: 477.803.145	/L	1	
(5A)	477 803 116 A	side member use also: 477.803.145	/R	1	
6	477 803 125 A	end piece	/L	1	
(6)	944 502 066 00	end piece	/R	1	
7	477 803 129	retaining bow		2	
8	477 803 145	bush		2	
9	E 477 803 231	cross member front seat	/V/L	1	
(9)	477 803 232	cross member front seat	/V/R	1	
10	477 803 241	bracket front seat	/H	4	
11	411 803 595	cover 136 MM $		2	
12	477 803 871 A	jacking point	/L	1	
(12)	477 803 872 A	jacking point	/R	1	
13	477 809 214 A	cover plate		1	

Pos	Part Number	Name	Remarks	Qty	Model	Pos	Part Number	Name	Remarks	Qty	Model
14	999 072 005 09	hexagon-head bolt M 6 X 12		1							
15	N 012 006 4	lock ring B 6		3							
16	N 011 524 7	washer A 6,4		1							
17	900 076 010 02	hexagon nut M 6		2							
18	477 803 387 B	cover plate		1							
19	N 015 458 1	speed nut B 4,8 X 20		4							
20	900 151 027 02	washer B 5,3		4							
21	N 013 968 7	tapping screw B 4,8 X 13		4							
22	477 803 253	strut		1							
23	N 011 008 8	hexagon nut M 8		4							
24	N 011 525 13	washer A 8,4		4							
25	900 027 015 02	lock ring B 8		4							
30	477 803 291	strut		2							
31	N 010 237 6	hexagon-head bolt M 8 X 12		8							
32	N 012 229 3	spring washer A 8		8							
33	944 503 139 00	cover plate		1							
34	999 072 005 09	hexagon-head bolt M 6 X 12		4							
35	900 151 029 02	washer 6,4		4							
36	944 201 049 00	cover		1							
37	477 803 729	foot support	/LL	1							
		- -- E N D -- -									

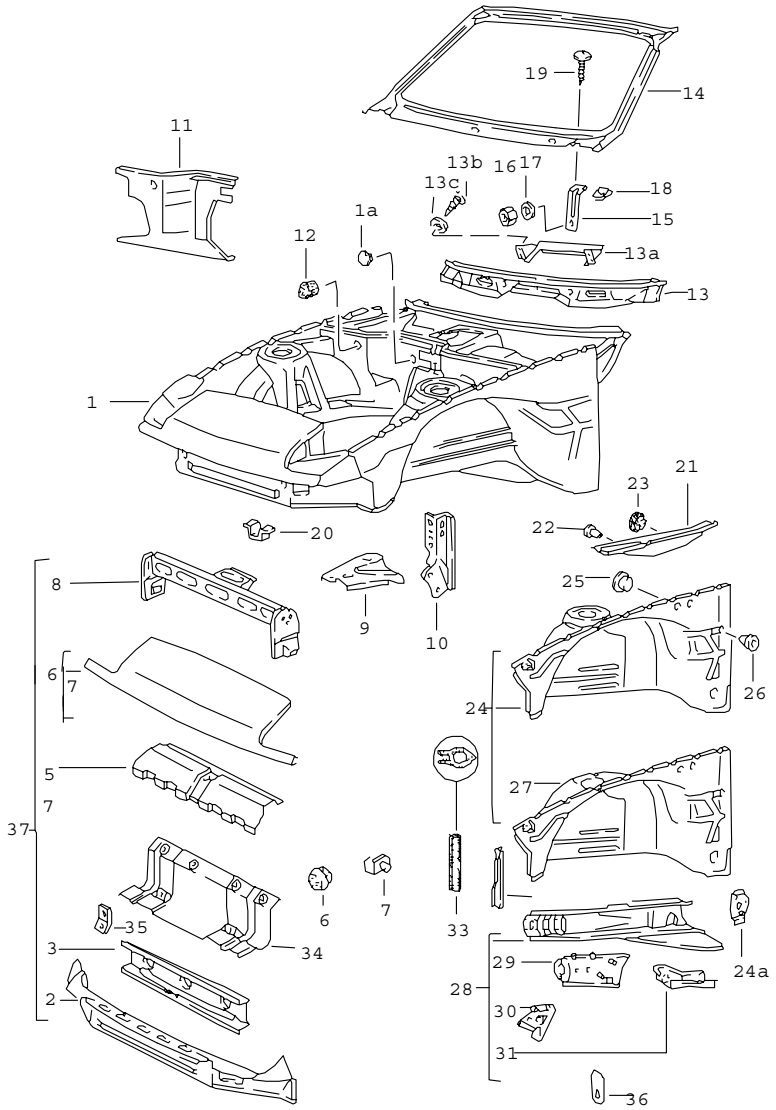

Pos	Part Number	Name	Remarks	Qty	Model
		body front section			
1	944 501 011 12	body front section without carbon canister use also: plug 999 703 103 40	/LL -83	1 2	
(1)	944 501 011 12	body front section use also: plug 999 703 103 40	/LL	1 2	M 573
(1)	945 501 011 05	body front section without carbon canister use also: plug 999 703 103 40	/RL -83	1 2	
(1)	945 501 011 14	body front section	/RL 84-	1	
1A	111 971 911 A	rubber sleeve		1	
2	944 503 043 00	end plate lower		1	
3	944 502 077 00	cross member	/V	1	
-	999 507 336 02	captive nut M 6 F 94EN4 07236>>		2	M 573
4	803 803 583	drain bush		3	
5	944 502 061 00	air duct		1	
6	477 805 593	end plate upper		1	
7 E	477 805 567	bracket	/L	1	
(7)	477 805 568	bracket	/R	1	
8	944 501 933 01	lock carrier it is necessary to rework	/V	1	
9	477 805 699	corner plate	/L	1	
(9)	477 805 699 A	corner plate	/L	1	M 573
10	477 805 057 A	reinforcement	/L	1	
(10)	477 805 058 A	reinforcement	/R	1	
(11)	944 502 021 01	firewall	/L	1	

Pos	Part Number	Name	Remarks	Qty	Model
11	944 502 202 00	firewall	/R	1	
12	477 805 667	water drain valve		2	
13	944 502 079 00	cross member	/LL	1	
(13)	945 502 079 00	cross member	/RL	1	
13A	944 572 377 00	bracket heating		1	
13B	N 013 883 3	tapping screw B 4,8 X 9,5		4	
13C	N 011 523 9	washer A 5,3 X 10		4	
14	477 805 571 A	windscreen frame		1	
15	477 805 592	cowl panel support		2	
16	900 910 012 02	lock nut M 6		2	
17	N 011 612 3	washer R 7		2	
18	N 015 458 1	speed nut 4,8 X 14,8		4	
19	900 143 046 07	tapping screw B 4,8 X 16		4	
20	477 805 693	support horn		1	
21	477 809 119	side member upper left	/LL	1	
(21)	945 502 119 02	side member	/RL	1	
(21)	477 809 120	side member upper right	/LL	1	
(21)	478 809 120	side member	/RL	1	
22	311 881 945 A	plug	/R	2	
23	803 803 583 A	cover		6	
24	944 501 901 01	wheel housing without carbon canister use also: plug 999 703 103 40 use also: POS.24A	/L 84-	1 2	
(24)	944 501 902 00	wheel housing complete use also: 478.809.446	/R /RL	1	
-	478 809 446	bearing bracket accelerator pedal	/RL	1	
24A	944 502 071 00	mounting release	84- /V	1	
25	999 703 103 40	plug	/L	2	
26	N 020 025 1	plug		X	
(26)	999 703 179 40	plug		X	
27	944 501 101 02	wheel housing	/L	1	
(27)	477 809 108 C	wheel housing	/R	1	
28	944 501 017 00	side member	/L	1	
(28)	944 501 018 00	side member	/R	1	
29	944 501 081 00	filler plate side member	/L	1	
(29)	944 501 082 00	filler plate	/R	1	
30	944 501 065 00	separator	/L	1	
(30)	944 501 066 00	separator	/R	1	
31	951 501 165 00	end plate	/L	1	
(31)	951 501 166 00	end plate	/R	1	
32	944 501 065 00	separator	/L	1	
(32)	944 501 066 00	separator	/R	1	
33	944 025 115 00	sealing rubber		2	
34	944 575 021 00	cooling air duct		1	
35	999 049 001 40	plastic nut		8	
36	477 809 035	support water reservoir		1	
37	944 503 031 00	terminal piece		1	
	GRV	prime coated complete			
		- -- E N D -- -			

Model	Year	MG	SG	Illustration	Restrictions	Update	10:36	07.04.2005	PORSCHE PET PORSCHE
944	85	8	01	801-15		187			

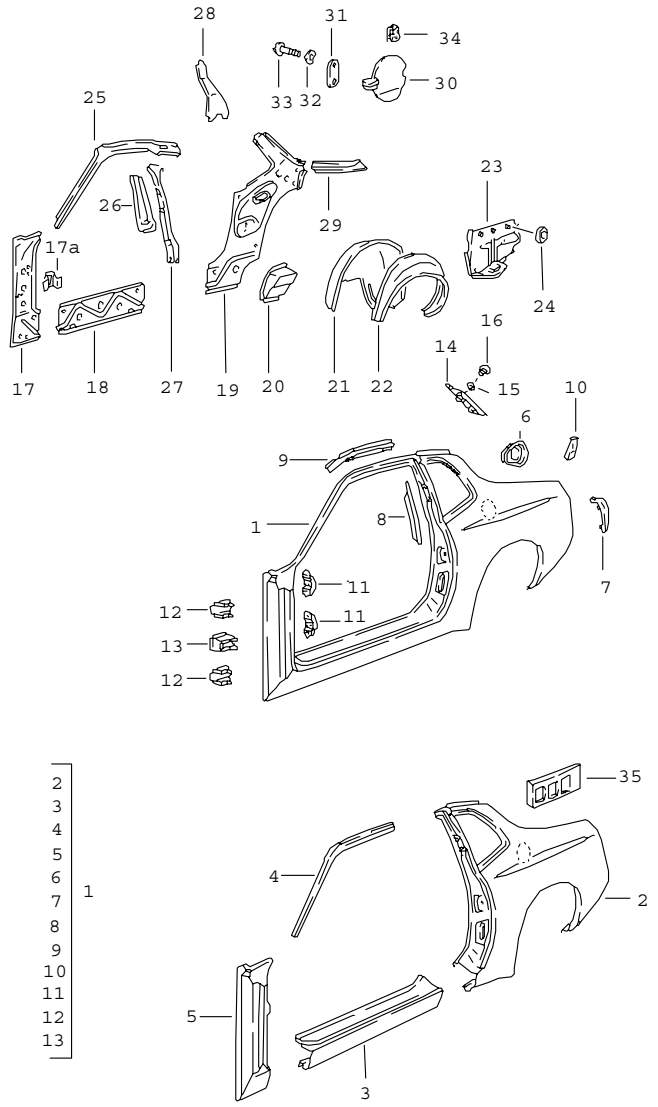

Pos	Part Number	Name	Remarks	Qty	Model
		side section			
1	931 503 601 02	side section	/L	1	
(1)	931 503 602 02	side section	/R	1	
2	931 503 901 00	side section	/L	1	
(2)	931 503 902 00	side section	/R	1	
3	944 503 611 00	door sill	/L	1	
(3)	944 503 612 00	door sill	/R	1	
4	931 503 517 00	roof frame	/L	1	
(4)	931 503 518 00	roof frame	/R	1	
5	931 503 411 00	hinge pillar	/L	1	
(5)	931 503 412 00	hinge pillar	/R	1	
6	944 503 068 00	retainer tank filler neck		1	
7	477 809 375 A	bracket for light	/L	1	
(7)	477 809 376 A	bracket for light	/R	1	
8	477 809 445	reinforcement	/L	1	
(8)	477 809 446	reinforcement	/R	1	
9	477 809 585	filler plate	/L	1	
(9)	477 809 586	filler plate	/R	1	
10	477 809 617	retaining bracket cover boot floor lining	/L	1	
(10)	477 809 618	retaining bracket	/R	1	
11	477 809 653	mounting plate		4	
12	477 809 655	hinge reinforcement		4	
13	477 809 625	reinforcement		2	
14	944 503 097 00	reinforcement	/L	1	
(14)	944 503 098 00	reinforcement	/R	1	
15	928 504 355 02	gasket		4	
16	999 015 005 07	half-round screw		4	

Pos	Part Number	Name	Remarks	Qty	Model
17	477 809 393 A	hinge pillar inner use also: POS.17A	/L /LL 84-	1	
(17)	477 809 394 A	hinge pillar use also: POS.17A	/R /RL 84-	1	
17A	944 502 373 00	mounting switch rear lid unlocking device	84-	1	
18	477 809 433	separator		2	
19	944 502 901 00	side section inner	/L -83	1	
19	944 502 901 01	side section inner	/L 84-	1	
(19)	944 502 902 00	side section inner with expansion tank	/R -83	1	
(19)	944 502 902 01	side section inner	/R 84-	1	
20	931 502 387 01	corner plate	/L	1	
(20)	931 502 388 01	corner plate	/R	1	
21	944 501 043 00	wheel housing inner	/L	1	
(21)	944 501 044 00	wheel housing	/R	1	
22	931 502 411 01	wheel housing outer	/L	1	
(22)	931 502 412 01	wheel housing	/R	1	
23	944 502 025 00	side section inner	/L/H	1	
(23)	944 502 026 00	side section	/R	1	
24	803 803 583	drain bush		X	
(24)	021 119 569	rubber sleeve		X	M 650
25	477 809 037	separator	/L	1	
(25)	477 809 037	separator	/L	1	M 650
(25)	477 809 038	separator	/R	1	
(25) A	477 809 038	separator	/R	1	M 650
26	477 809 397	centre pillar inner	/L	1	
(26)	477 809 398	centre pillar	/R	1	
27	944 502 049 00	reinforcement inner	/L	1	
(27)	944 502 050 00	reinforcement	/R	1	
29	944 502 439 00	reinforcement	/L	1	
(29)	477 809 440	reinforcement	/R	1	
30	931 504 095 00	flap F >>94EN4 09877		1	
30	944 504 095 00	flap F 94EN4 09878>>		1	
31	477 853 403	desk pad		X	
32	N 012 222 4	spring washer A 5		2	
33	900 146 003 02	oval-head screw M5 X 10		2	
34	931 504 397 00	stop rubber F >>94EN4 09877		1	
34	944 504 397 00	stop F 94EN4 09878>>		1	
35	944 555 275 00	filler piece	/L -83	1	
(35)	944 555 275 01	filler piece	/L 84-	1	
(35)	944 555 276 00	filler piece	/R	1	
		- -- E N D -- -			

Model	Year	MG	SG	Illustration	Restrictions	Update	10:36	07.04.2005	PORSCHE PET PORSCHE
944	85	8	01	801-20		187			

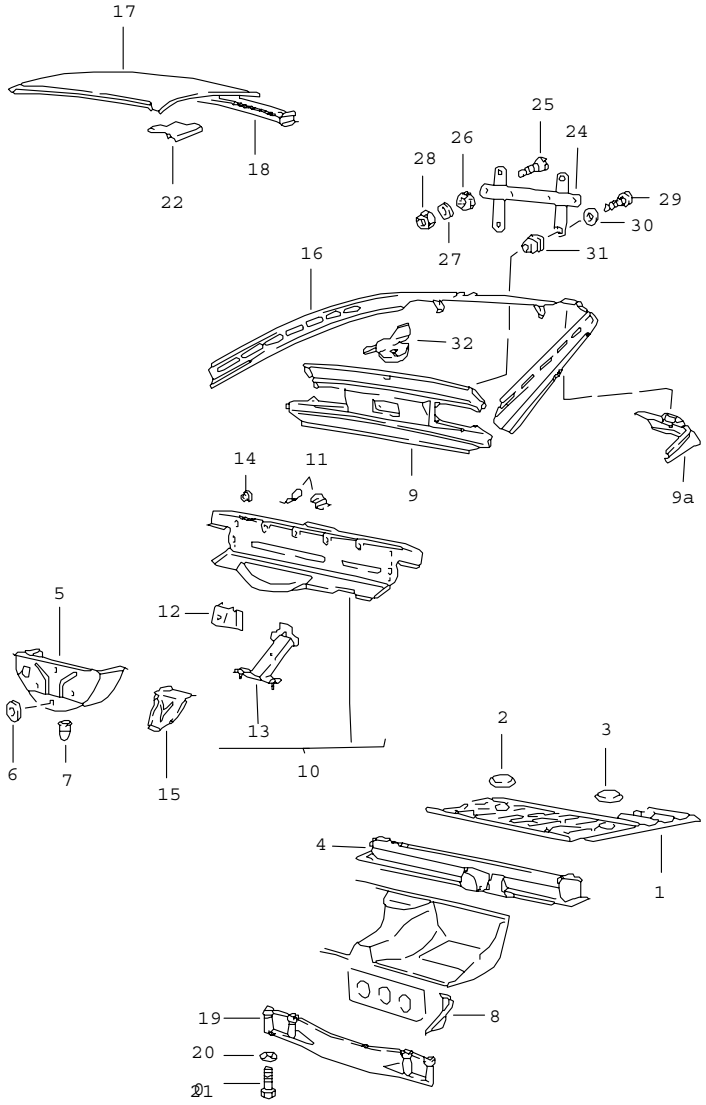

Pos	Part Number	Name	Remarks	Qty	Model
		transmission carrier boot floor plate roof			
1	944 501 075 00	boot floor plate		1	
2	477 803 581	cover		1	
3	411 803 595	cover 136 MM $		1	
4	944 501 073 00	transmission carrier		1	
5	477 813 131	spare-wheel well	/V	1	
6	803 803 583	drain bush		3	
7	111 701 309	rubber sleeve		1	
8	477 813 145 B	corner panel	/L	1	
(8)	477 813 146 B	corner panel	/R	1	
9	944 503 037 01	end plate		1	
9A	477 813 345 A	reinforcement	/L	1	
(9A) A	477 813 346 A	reinforcement	/R	1	
(9A)	944 502 346 01	reinforcement	/R	1	
10	944 503 901 01	end plate		1	
11	477 813 169	angle scissors type jack	/L	1	
(11)	477 813 170	angle scissors type jack	/R	1	
12	477 813 165	support		1	
13	944 502 091 00	support muffler		1	
14	999 703 179 40	plug	/H	1	
15	477 813 309	corner panel	/L	1	
(15)	944 502 210 00	corner panel	/R	1	
-	951 512 447 00	reinforcement plate		2	
16	944 502 035 02	lock carrier	/H	1	
(17) A	944 503 912 01	roof	-83	1	M 650
(17)	944 503 912 01	roof	-83	1	M 650

Pos	Part Number	Name	Remarks	Qty	Model
(17)	A 944 502 031 01	roof	84-	1	M 650
(17)	944 503 912 00	roof	84-	1	M 650
17	A 477 817 111 B	roof		1	
17	944 503 912 02	roof		1	
18	477 817 171	cross member	/H -83	1	
18	477 817 171 A	roof frame	/H 84-	1	
19	477 813 285	strut seat well		1	
20	900 074 181 02	screw M 10 X 95		4	
21	900 025 008 09	washer 10,5		4	
22	477 817 033	reinforcement	/V/L	1	
(22)	477 817 034	reinforcement	/V/R	1	
-	N 015 430 1	speed nut for support number plate		2	
24	928 701 050 03	support number plate	H)	1	(USA) (J) (C
25	N 014 143 1	oval-head screw AM 6 X 22		2	
(25)	N 100 457 01	countersunk-head screw M 5 X 25		2	(USA)(J)(CH)
26	803 011 243	rubber washer		2	
27	900 151 027 02	washer A 5,3		2	(USA)(J)(CH)
28	900 910 009 02	lock nut M 5		2	(USA)(J)(CH)
29	900 143 134 00	tapping screw BZ 4,2 X 9,5		4	(USA)(J)(CH)
30	N 011 522 8	washer 4,3		4	(USA)(J)(CH)
31	999 591 498 40	special nut		4	(USA)(J)(CH)
32	944 501 207 01	retaining bracket		1	
		- -- E N D -- -			

Model	Year	MG	SG	Illustration	Restrictions	Update			
944	85	8	01	801-25		187	10:36	07.04.2005	PORSCHE PET PORSCHE

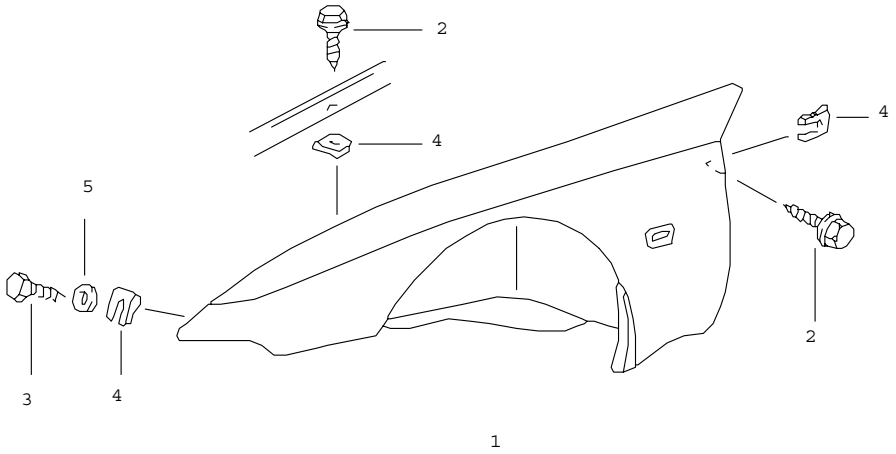

Pos	Part Number	Name	Remarks	Qty	Model
		wing			
1	931 503 021 02	wing	/L	1	
(1)	931 503 022 02	wing	/R	1	
2	N 090 172 1	screw		22	
3	N 013 891 1	tapping screw 6,3 X 19		24	
4	999 507 003 02	speed nut B 6,3 X 17		24	
5	N 011 524 7	washer A 6,4		2	
		- -- E N D -- -			

Model	Year	MG	SG	Illustration	Restrictions	Update			
944	85	8	02	802-00		187	10:37	07.04.2005	PORSCHE PET PORSCHE

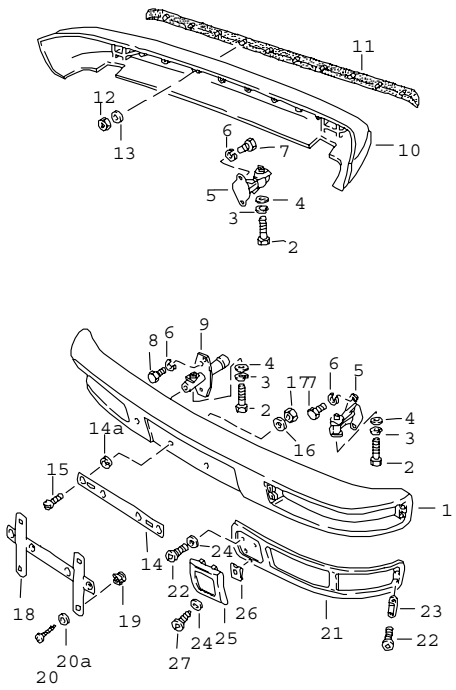

Pos	Part Number	Name	Remarks	Qty	Model
		bumper without impact absorber			
1	931 505 087 00	bumper	/V	1	
(1)	931 505 087 01	bumper	/V	1	M 288
2	900 074 064 02	hexagon-head bolt M 10 X 60		4	
3	900 027 016 02	lock ring B 10		4	
4	900 025 008 09	washer A 10,5		4	
5	477 807 131 A	bumper reinforcement		3	
6	N 012 009 3	lock ring A 8		8	
7	900 075 087 02	hexagon-head bolt M 8 X 20		6	
8	900 075 029 09	hexagon-head bolt M 8 X 25		2	
9	944 505 039 01	bumper reinforcement	/V/R	1	
10	931 505 387 00	bumper	/H	1	
11	477 807 319	protective moulding	/H	1	
12	900 910 010 09	lock nut M 6		10	
13	N 011 524 7	washer A 6,4		10	
(14)	911 701 121 03	support number plate		1	
14A	914 571 903 10	sealing ring		4	
15	N 100 457 01	countersunk-head screw M 5 X 25		2	
16	900 151 027 02	washer A 5,3		2	
17	900 910 009 02	lock nut M 5		2	
18	928 701 050 03	support number plate	/V	1	(J)
19	999 591 498 40	special nut		X	

Pos	Part Number	Name	Remarks	Qty	Model	Pos	Part Number	Name	Remarks	Qty	Model
20	900 143 134 00	tapping screw BZ 4,2 X 9,5		X							
20A	N 011 522 8	washer 4,3 towing lug see group 0/01/00		X							
21	931 505 195 01	frame for light	/L	1							
(21)	931 505 196 01	frame for light	/R	1							
22	N 014 117 9	oval-head screw M 4 X 15		10							
23	931 505 199 00	clip		2							
24	900 025 002 02	washer A 4,3		6							
25	931 505 201 00	bumper horn	/L	1							
(25)	931 505 202 00	bumper horn	/R	1							
26	999 507 018 02	speed nut B 4,2		2							
27	900 143 047 07	tapping screw B 4,2 X 19		2							
		- -- E N D -- -									

Model	Year	MG	SG	Illustration	Restrictions	Update				
944	85	8	02	802-05		187	10:37	07.04.2005	PORSCHE	PET	PORSCHE

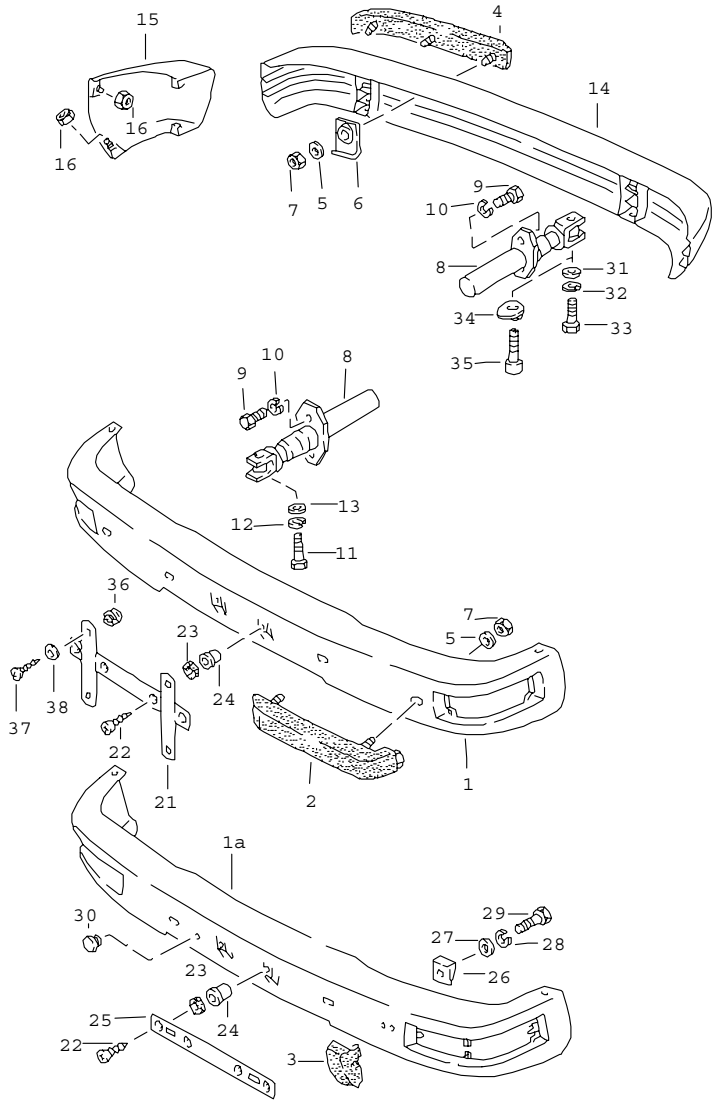

Pos	Part Number	Name	Remarks	Qty	Model
		bumper with impact absorber			
1A E	931 505 109 01	bumper	/V	1	M 058
(1A)	931 505 109 02	bumper	/V	1	M 058/288
3	477 807 353	bumper horn	/L	1	M 058
(3)	477 807 354	bumper horn	/R	1	M 058
(4)	944 505 061 00	rubber moulding	/L	1	
4	944 505 062 00	rubber moulding	/R	1	
5	N 011 612 3	washer R 7		6	M 058
6	477 807 197	support	/H	6	
7	113 101 175	hexagon nut		6	M 058
8	944 505 017 03	impact absorber		4	
9	N 010 240 16	hexagon-head bolt M 8 X 20		8	
10	900 027 015 02	lock ring A 8		8	
11	N 010 165 2	hexagon-head bolt M 12 X 65	/V	2	
12	N 012 042 4	lock ring B 12	/V	2	
13	N 011 531 7	washer A 13	/V	2	
14	944 505 301 00	bumper	/H		
(15)	931 505 059 00	cover prime coated	/L	1	
15	931 505 060 00	cover prime coated	/R	1	
16	900 910 007 02	lock nut M 5		4	
(17)	477 807 347	cap	/L	1	
17	944 505 348 00	cap	/R	1	
18	N 014 260 1	oval-head screw AM 4 X 14		2	

Pos	Part Number	Name	Remarks	Qty	Model
19	900 151 028 02	washer B 4,3		2	
20	N 011 004 6	hexagon nut		2	
22	N 043 983 1	tapping screw B 5,5 X 32		2	
23	944 505 351 00	spacer rubber		2	
24	N 902 508 01	special nut		2	
25	911 701 121 03	support number plate		1	
26	477 807 361	plate	/L	1	M 058
(26)	477 807 362	plate	/R	1	M 058
27	N 011 652 1	washer 7		2	M 058
28	N 012 006 4	lock ring B 6		2	M 058
29	N 010 339 3	hexagon-head bolt M 6 X 40		2	M 058
30	999 703 181 40	plug towing lug see group 0/01/00		1	M 058
31	N 011 531 7	washer A 13 F >>94EN4 03821	/H	2	
32	N 012 042 4	lock ring B 12 F >>94EN4 03821	/H	2	
33	N 010 165 2	hexagon-head bolt M 12 X 65 F >>94EN4 03821	/H	2	
34	944 505 243 00	eccentric washer F 94EN4 03822>>	/H	2	
35	N 100 436 02	pan-head screw M 12 X 1,5 X 65 F 94EN4 03822>>	/H	2	
36	999 591 498 40	special nut		X	
37	900 143 134 00	tapping screw BZ 4,2 X 9,5		X	
38	N 011 522 8	washer 4,3		X	
		- -- E N D -- -			

Model	Year	MG	SG	Illustration	Restrictions	Update				
944	85	8	02	802-10		187	10:37	07.04.2005	PORSCHE	PET	PORSCHE

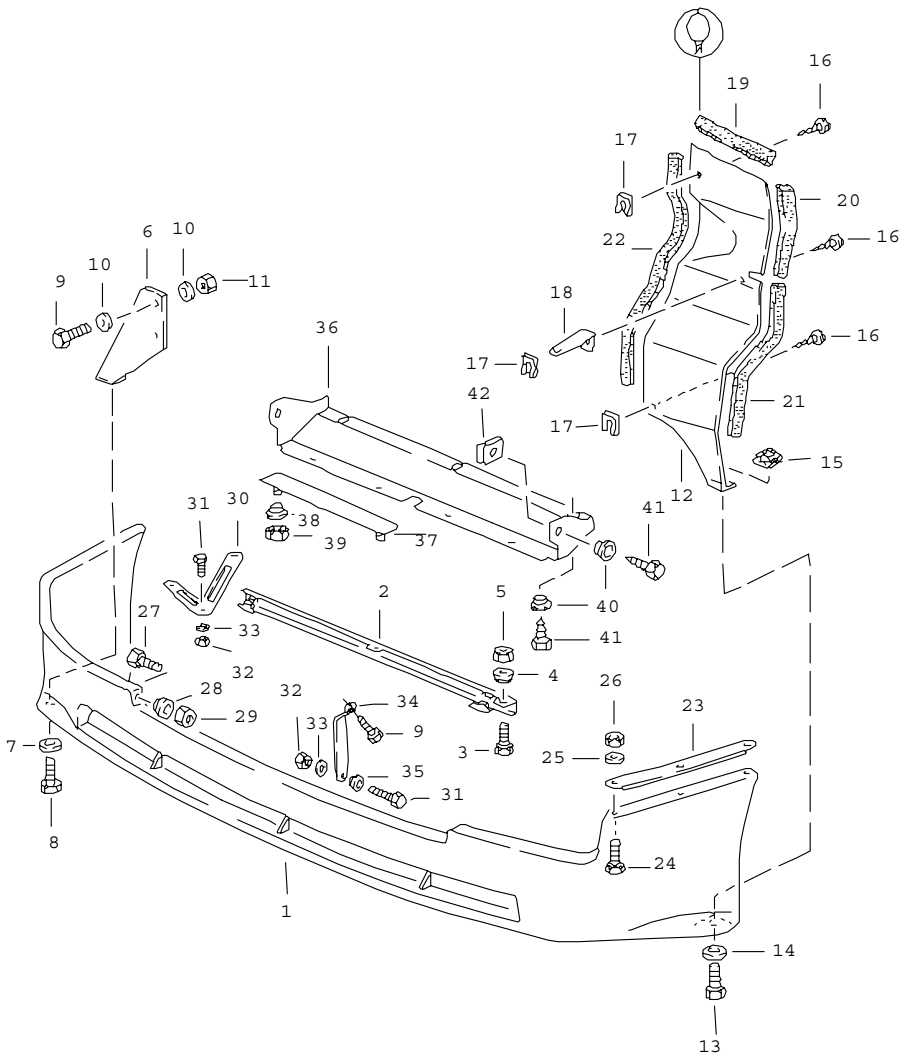

Pos	Part Number	Name	Remarks	Qty	Model
		front spoiler			
1	931 505 371 03	front spoiler up to model 84 use also: POS.36-42		1	
(1)	931 505 371 05	front spoiler for fog tail lamp up to model 84 use also: POS.36-42		1	
2	931 501 051 00	attachment strip		1	
3	N 010 215 13	hexagon-head bolt M6 X 12		3	
4	937 503 255 00	spacer		3	
5	900 910 010 09	lock nut M 6		3	
6	931 505 032 00	bracket	/R	1	
7	999 217 013 00	hexagon-head bolt M6 X 12		1	
8	937 503 255 00	spacer		1	
9	999 072 005 09	hexagon-head bolt M6 X 12		2	
10	N 011 524 7	washer A 6,4		4	
11	900 910 010 09	lock nut M 6		2	
12	944 503 321 01	cover	/L	1	
13	999 217 014 00	hexagon-head bolt M6 X 16		1	
14	N 011 666 7	washer A 6,4		1	
15	999 507 335 02	nut M 6		1	
16	N 090 172 1	screw B6,3 X 19		3	
17	999 507 003 02	speed nut B6,3 X 17		3	
18	944 503 419 00	retaining bracket		1	

Pos	Part Number	Name	Remarks	Qty	Model
19	944 025 115 00	sealing rubber		1	
20	944 025 115 00	sealing rubber		1	
21	944 025 115 00	sealing rubber		1	
22	944 025 115 00	sealing rubber		1	
23	944 503 513 00	attachment strip		2	
24	N 010 215 13	hexagon-head bolt M6 X 15		6	
25	N 011 524 7	washer A 6,4		6	
26	900 910 010 09	lock nut M 6		6	
27	N 010 215 13	hexagon-head bolt M6 X 15		2	
28	937 503 255 00	spacer		2	
29	900 910 010 09	lock nut M 6		2	
30	944 503 514 00	support F 94DN4 08353>>		1	
31	N 010 215 13	hexagon-head bolt M 6 X 15		1	
32	900 910 010 09	lock nut M 6		1	
33	N 011 524 7	washer A 6,4		1	
34	944 505 179 00	retaining bracket		1	
35	944 503 255 00	spacer		1	
36	E 944 575 921 00	air duct		1	
37	944 505 055 00	attachment strip		2	
38	928 503 255 00	spacer		4	
39	900 910 010 09	lock nut M 6		4	
40	937 503 255 01	spacer		5	
41	N 010 215 13	hexagon-head bolt M 6 X 15		5	
42	999 507 246 02	speed nut M 6		2	

- -- E N D -- -

Model	Year	MG	SG	Illustration	Restrictions	Update			
944	85	8	03	803-00		187	10:37	07.04.2005	PORSCHE PET PORSCHE

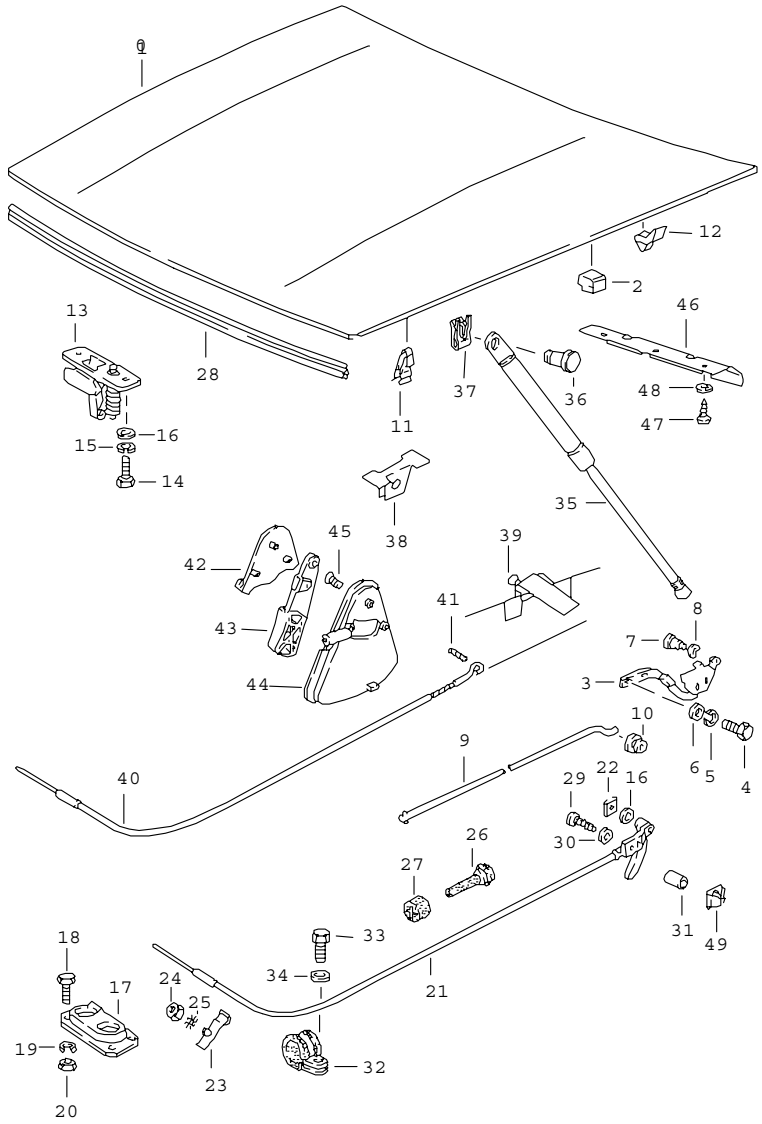

Pos	Part Number	Name	Remarks	Qty	Model
		cover front actuator lid lock			
1	944 511 905 00	cover		1	
2	477 823 185	filler piece		2	
3	944 511 301 00	hinge	/L	1	
(3)	944 511 302 00	hinge	/R	1	
4	N 010 240 16	hexagon-head bolt M 8 X 20		8	
5	900 027 015 02	lock ring B 8		8	
6	900 025 007 02	washer A 8,4		8	
7	477 823 307	pin	-84	2	
7	944 511 307 00	pin	85-	2	
8	N 012 230 6	spring washer B 10	-84	2	
8	944 511 309 00	washer	85-	2	
9	477 823 363 A	hood stay		1	
10	171 823 395	rubber mounting		1	
11	431 823 397	support		1	
12	937 511 237 00	guide piece		4	
13	477 823 507	lock upper part lid lock		1	
14	999 072 005 09	hexagon-head bolt M 6 X 12		2	
16	E 999 025 049 02	washer	-83	2	
17	928 511 027 02	lid lock lower part		1	
18	900 075 116 02	hexagon-head bolt M 4 X 8		4	
19	N 012 004 2	lock ring B 4		4	
20	N 011 004 6	hexagon nut M 4		4	

Pos	Part Number	Name	Remarks	Qty	Model
21	477 823 531 A	lid lock cable	-83	1	
22	N 012 855 1	clamping washer	-83	1	
23	477 823 551	clamping piece		1	
24	900 076 010 02	hexagon nut M 6		1	
25	N 042 121 3	shake-proof washer A 6,4		1	
26	477 823 591	grommet		1	
27	477 823 593	plug		1	
28	928 511 141 04	gasket		1	
29	N 013 952 1	tapping screw 4,8 X 50	-83	2	
30	900 025 003 02	washer A 5,3	-83	2	
31	477 823 165 A	bush	-83	2	
32	999 511 177 02	clamp		1	
33	999 072 005 09	hexagon-head bolt M 6 X 12		1	
34	N 011 524 7	washer		1	
35	944 511 351 01	gas-filled strut		2	
36	999 094 011 09	bolt		2	
37	N 900 470 01	lock washer		2	
38	944 511 373 00	pneumatic spring mount		2	
39	944 501 371 00	pneumatic spring mount	/L	1	
(39)	944 501 372 00	pneumatic spring mount	/R	1	
40	944 511 037 00	bowden cable	84-	1	
41	900 197 018 00	roll pin 4 X 12	84-	1	
42	928 511 143 02	cover	84-	1	
43	928 511 175 02	pull handle	84-	1	
	70B	black			
44	928 511 173 02	cup	84-	1	
	70B	black			
45	900 249 001 02	countersunk-head screw M 6 X 15	84-	2	
46	944 511 201 00	tab washer		1	M 533
47	900 143 007 02	tapping screw BZ 4,2 X 13		3	M 533
48	900 025 002 02	washer BZ 4,3 X 9		3	M 533
49	999 591 468 02	prestole cage B 4,8 mount lid-release cable		2	

- -- E N D -- -

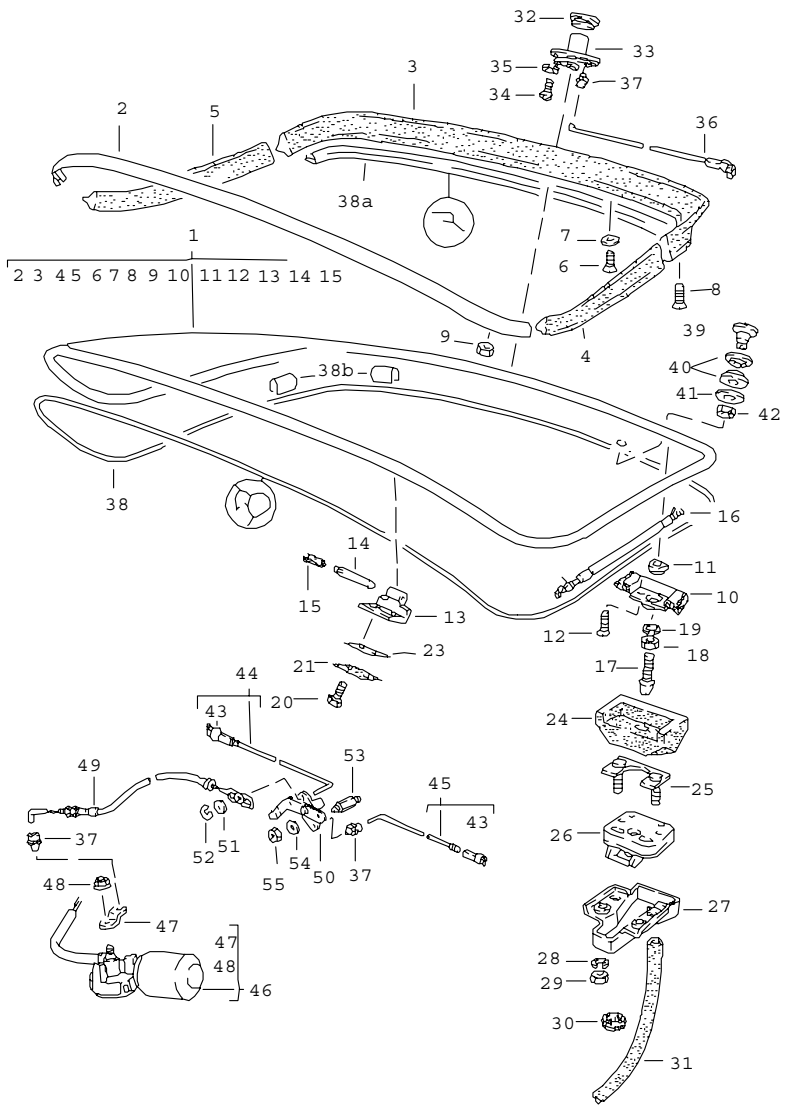

Pos	Part Number	Name	Remarks	Qty	Model
		rear lid with rear window rear spoiler			
1	477 827 027 J	rear lid F >>94FN4 22084		1	
1	944 512 027 01	rear lid ---------- rear lid together with wiper motor see group 9/04/05 ---------- F 94FN4 22085>>		1	
2	477 853 313 A	trim frame		1	
3	937 512 555 00	rear spoiler centre F 94CN4 02335>>		1	
(3)	937 512 555 00	rear spoiler centre F >>94CN4 02334		1	
	TPP				
4	937 512 557 00	rear spoiler lateral F 94CN4 02335>>	/L	1	
(4)	937 512 557 00	rear spoiler lateral F >>94CN4 02334	/L	1	
	TPP				
5	937 512 558 00	rear spoiler lateral F 94CN4 02335>>	/R	1	
(5)	937 512 558 00	rear spoiler lateral F >>94CN4 02334	/R	1	
	TPP				
6	N 033 183 1	countersunk-head screw M 5 X 20		7	
7	477 827 453 A	washer		7	
8	N 033 185 1	countersunk-head screw M 4 X 16		4	

Pos	Part Number	Name	Remarks	Qty	Model
9	N 021 255 1	slotted nut M 4		12	
10	477 827 033 A	housing F >>94FN4 22084	/L	1	
10	944 512 033 01	housing F 94FN4 22085>>	/L	1	
(10)	477 827 034 A	housing F >>94FN4 22084	/R	1	
(10)	944 512 034 01	housing F 94FN4 22085>>	/R	1	
11	477 827 035	rubber mounting		2	
12	999 219 011 07	countersunk-head screw M 6 X 16,		4	
13	477 827 305 B	hinge half		2	
14	A 944 512 311 00	hinge pin		2	
14	944 512 311 00	hinge pin		2	
15	477 827 441	bush hinge pin		2	
(16)	477 827 348 F	gas-filled strut	/R	1	
(16)	944 512 348 00	gas-filled strut	/R	1	
16	944 512 349 00	gas-filled strut	/L	1	
17	477 827 527	lock pin F >>94FN4 22084		2	
17	944 538 547 00	lock pin F 94FN4 22085>>		2	
18	N 011 008 8	hexagon nut M 8		2	
19	900 027 015 02	lock ring B 8		2	
20	999 218 045 07	pan-head screw M 8 X 12		4	
21	928 512 417 03	plate		2	
23	944 512 413 00	gasket lid hinge		2	
24	477 827 365 D	gasket F >>94FN4 22084	/L	1	
24	944 512 365 01	gasket F 94FN4 22085>>	/L	1	
(24)	477 827 366 D	gasket F >>94FN4 22084	/R	1	
(24)	944 512 366 01	gasket F 94FN4 22085>>	/R	1	
25	951 512 447 00	reinforcement plate		2	
26	477 827 505 A	rear lid lock F >>94FN4 22084	/L	1	
26	944 538 955 01	rear lid lock F 94FN4 22085>>	/L	1	
(26)	477 827 506 A	rear lid lock F >>94FN4 22084	/R	1	
(26)	944 538 956 01	rear lid lock F 94FN4 22085>>	/R	1	
27	477 827 541	water drip pan		2	
28	N 012 006 4	lock ring B 6		4	
29	900 076 010 02	hexagon nut M 6		4	
30	111 971 911 A	rubber sleeve		2	
31	477 827 547	hose 400 MM		2	
32	477 827 529 A	sealing ring		1	
33	477 898 082	lock cylinder w/o stipulated lock number		1	
(33)	477 827 573 B	lock cylinder with stipulated lock-no.		1	
34	N 014 139 5	oval-head screw M 6 X 12		2	
35	N 012 007 2	lock ring A 6		2	
36	477 827 583	pull rod	-83	2	
37	993 531 563 00	linkage clip		2	
38	944 512 043 00	seal for rear flap		1	
38A	A 944 512 463 00	additional gasket		1	

Pos	Part Number	Name	Remarks	Qty	Model	Pos	Part Number	Name	Remarks	Qty	Model
38A	944 512 463 00	additional gasket		1							
38B	999 591 342 02	u-clamp		4							
39	477 845 333	screw plug		1							
40	477 955 439	grommet		2							
41	477 845 331	washer		1							
42	N 011 118 14	hexagon nut M 8		1							
43	N 015 704 1	ball socket	84-	1							
44	944 512 092 01	pull rod	/R 84-	1							
45	944 512 091 00	pull rod	/L 84-	1							
46	944 624 024 01	electric motor see technical information GR.5,NR.1/93	84-	1							
47	944 624 824 00	lever	84-	1							
48	E 999 084 045 02	lock nut	84-	1							
49	944 512 097 02	bowden cable	84-	1							
50	944 512 095 00	lever	84-	1							
51	999 704 104 50	rubber washer	84-	1							
52	N 012 054 2	clamping washer	84-	1							
53	944 512 201 00	stud	84-	2							
54	N 011 524 7	washer B 6	84-	2							
55	900 076 010 02	hexagon nut M 6	84-	2							
		- -- E N D -- -									

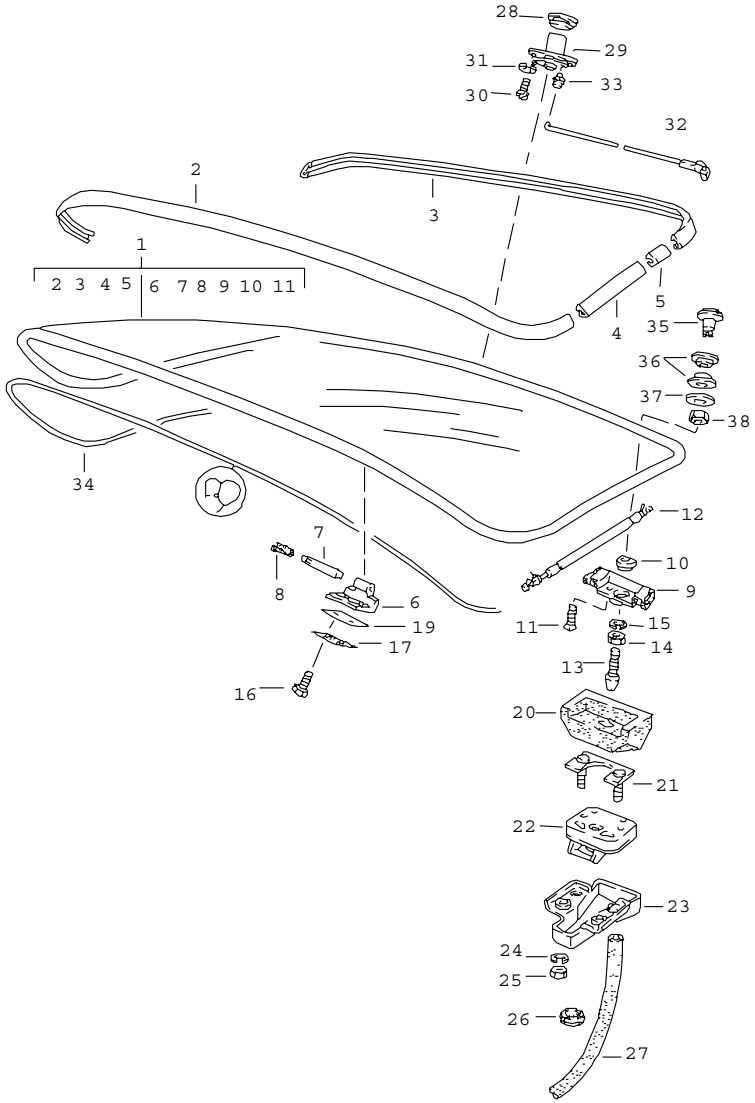

Pos	Part Number	Name	Remarks	Qty	Model
		rear lid with rear window without rear spoiler			(J)
(1)	477 827 027 G	rear lid without see group 8/03/05 order also: POS.35-38 F >>94FN4 22084		1	M 425 M 425
1	944 512 027 02	rear lid F 94FN4 22085>>		1	
2	477 853 313	trim frame		1	
3	477 853 311	trim frame		1	
4	477 853 315	trim frame	/L	1	
(4)	477 853 316	trim frame	/R	1	
5	477 853 367	sleeve trim frame		4	
6	477 827 305 B	hinge half		2	
7	A 944 512 311 00	hinge pin		2	
7	944 512 311 00	hinge pin		2	
8	477 827 441	bush hinge pin		2	
9	477 827 033	housing F >>94FN4 22084	/L	1	
9	944 512 033 01	housing F 94FN4 22085>>	/L	1	
(9)	477 827 034	housing F >>94FN4 22084	/R	1	
(9)	944 512 034 01	housing F 94FN4 22085>>	/R	1	
10	477 827 035	rubber mounting		2	
11	999 219 011 07	countersunk-head screw M 6 X 16		4	
12	477 827 348 F	gas-filled strut	/R	1	
(12)	477 827 349 D	gas-filled strut	/L	1	

Pos	Part Number	Name	Remarks	Qty	Model
13	477 827 527	lock pin F >>94FN4 22084		2	
13	944 538 547 00	lock pin F 94FN4 22085>>		2	
14	N 011 008 8	hexagon nut M 8		2	
15	900 027 015 02	lock ring B 8		2	
16	999 218 045 07	pan-head screw M 8 X 12		4	
17	928 512 417 03	plate		2	
19	944 512 413 00	gasket lid hinge		2	
20	477 827 365 A	gasket F >>94FN4 22084	/L	1	
20	944 512 365 01	gasket F 94FN4 22085>>	/L	1	
(20)	477 827 366 A	gasket F >>94FN4 22084	/R	1	
(20)	944 512 366 01	gasket F 94FN4 22085>>	/R	1	
21	951 512 447 00	reinforcement plate		2	
22	477 827 505 A	rear lid lock F >>94FN4 22084	/L	1	
22	944 538 955 01	rear lid lock F 94FN4 22085>>	/L	1	
(22)	477 827 506 A	rear lid lock F >>94FN4 22084	/R	1	
(22)	944 538 956 01	rear lid lock F 94FN4 22085>>	/R	1	
23	477 827 541	water drip pan		2	
24	N 012 006 4	lock ring B 6		4	
25	900 076 010 02	hexagon nut M 6		4	
26	111 971 911 A	rubber sleeve		2	
27	477 827 547	hose 400 MM		2	
28	477 827 529 A	sealing ring		1	
29	477 898 082	lock cylinder w/o stipulated lock number		1	
(29)	477 827 573 B	lock cylinder with stipulated lock-no.		1	
30	N 014 139 5	oval-head screw M 6 X 12		2	
31	N 012 007 2	lock ring A 6		2	
32	477 827 583	pull rod		2	
33	993 531 563 00	linkage clip		2	
34	944 512 043 00	seal for rear flap		1	
-	999 591 342 02	u-clamp		4	
35	477 845 333	screw plug		1	
36	477 955 439	grommet		2	
37	477 845 331	washer		1	
38	N 011 118 14	hexagon nut M 8		1	

- -- E N D -- -

Model	Year	MG	SG	Illustration	Restrictions	Update			
944	85	8	04	804-00		187	10:38	07.04.2005	PORSCHE PET PORSCHE

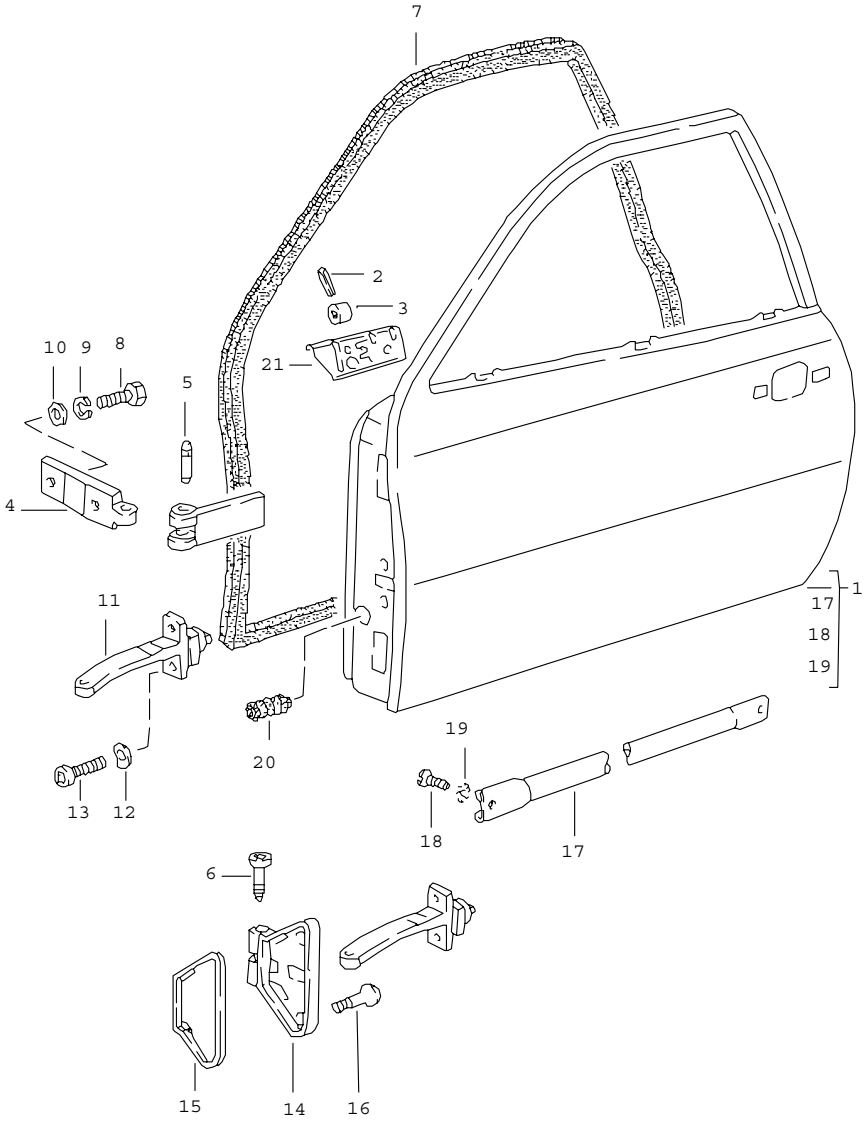

Pos	Part Number	Name	Remarks	Qty	Model
		door			
1	944 531 005 01	door in white prepared for door mirror	/L	1	
1	478 831 051 R	door in white not prepared for door mirror	/RL/L	1	
(1)	478 831 052 R	door in white prepared for door mirror	/R	1	
(1)	944 531 006 02	door in white not prepared for door mirror	/R	1	
2	N 013 295 1	tensioning sleeve		2	
3	928 531 235 03	threaded piece		2	
4	171 831 403	hinge half		4	
5	321 831 421	hinge pin		4	
6	928 537 419 03	pan-head screw		2	
7	944 537 091 00	door seal	/L	1	
(7)	944 537 092 00	door seal	/R	1	
8	900 119 052 02	pan-head screw M 8 X 15		8	
9	900 027 015 02	lock ring B 8		8	
10	823 711 815	washer		8	
11	944 537 609 00	door support		2	
11	944 537 609 00	door support		2	
12	N 011 524 7	washer B 6		4	
13	900 067 008 02	pan-head screw M 6 X 12		4	
14	928 537 417 02	bearing bracket	/L	1	
(14)	928 537 418 02	bearing bracket	/R	1	
15	928 537 425 02	desk pad bearing bracket	/L	1	

Pos	Part Number	Name	Remarks	Qty	Model
(15)	928 537 426 02	desk pad bearing bracket	/R	1	
16	928 537 459 02	oval-head screw M 6 X 20		4	
17	477 831 155	reinforcement		2	M 190
18	E 999 147 006 02	oval-head screw M 8 X 16		4	M 190
19	E N 012 133 1	shake-proof washer V 8,4		4	M 190
20	477 971 910	bellows		2	
21	477 831 139 C	reinforcement door mirror	/L	1	
(21)	477 831 140 C	reinforcement door mirror	/R	1	
		- -- E N D -- -			

Pos	Part Number	Name	Remarks	Qty	Model

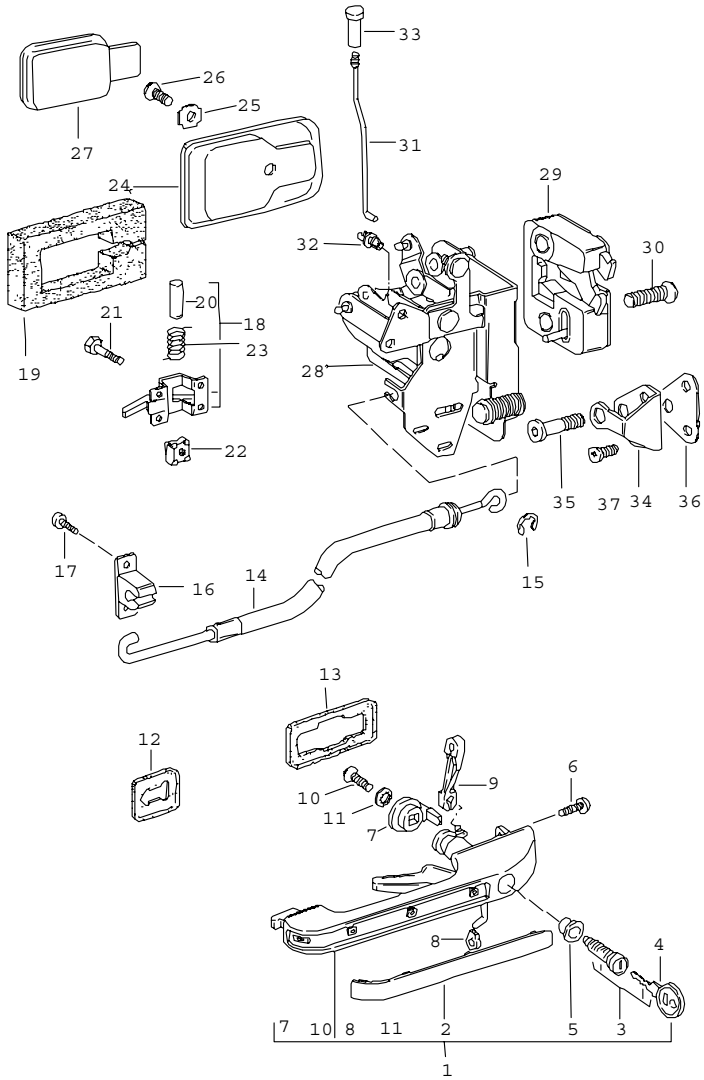

Pos	Part Number	Name	Remarks	Qty	Model
		installation parts door door lock			
1	477 837 037 H	outer door handle with lock cylinder w/o stipulated lock number	/L	1	
(1)	477 837 038 H	outer door handle with lock cylinder w/o stipulated lock number	/R	1	
2	823 837 239	cover		2	
3	944 538 903 00	lock cylinder with keys w/o stipulated lock number		2	
(3)	944 538 903 01	lock cylinder with keys with stipulated lock-no.		2	
-	-	grease for lock cylinder see group 0/05/00			
4	477 837 219	blank key		2	
(4)	944 538 933 00	key with stipulated lock-no.		1	
5	111 837 227 B	sealing ring		2	
6	803 837 951	self-lock. fillister screw		2	
7	477 837 497	driver		2	
8	999 168 004 40	ball socket		2	
9	A 477 837 505 A	connecting piece F >>94CN4 03921 F >>94DN4 00108	/L	1	 (J)
9	477 837 505 A	connecting piece	/L	1	
(9)	477 837 506 A	connecting piece	/R	1	
10	N 033 165 1	countersunk-head screw AM 4 X 8		2	
11	N 012 116 1	serrated lock washer V 4,3		2	
12	867 837 209	desk pad	/V	2	
13	171 837 211 A	desk pad	/H	2	

Pos	Part Number	Name	Remarks	Qty	Model
14	477 837 017 A	bowden cable		2	
15	900 116 002 02	lock washer 3,2		2	
16	477 837 115 A	support		2	
17	A 999 217 029 02	hexagon-head bolt		4	
17	999 217 029 02	hexagon-head bolt M 6 X 10 self-locking		4	
18	171 837 019	inner door release	/L	1	
	041	black			
	90V	brown			
(18)	171 837 020	inner door release	/R	1	
	041	black			
	90V	brown			
19	477 831 304 A	seal		2	
20	N 013 666 1	rivet B 4 X 32		2	
21	999 217 029 02	hexagon-head bolt		8	
22	477 837 521	captive nut		8	
23	811 837 723	spring for operating lever		2	
24	171 837 235	rose		2	
	01C	black			
	90V	brown			
25	111 837 291	cone washer		2	
26	N 014 216 1	countersunk-head screw AM 5 X 10		2	
27	311 837 247	finger plate		2	
	043	black			
	90V	brown			
28	928 537 907 03	lock inner part	/LL/L	1	
(28)	928 537 908 04	lock inner part	/LL/R	1	
(28)	927 537 907 04	lock inner part	/RL/L	1	
(28)	927 537 908 03	lock inner part	/RL/R	1	
29	928 537 153 03	door lock outer part	/L	1	
(29)	928 537 154 03	door lock outer part	/R	1	
30	928 537 721 02	oval-head screw M 8 X 35		4	
31	477 837 183 A	locking rod		2	
32	477 837 187	clip		2	
33	111 837 187 B	knob		2	
	043	black			
34	928 537 133 02	door lock striker		2	
35	928 537 131 03	lock pin		2	
36	928 537 135 04	desk pad		2	
37	900 269 027 02	countersunk-head screw M 8 X 16		4	

- -- E N D -- -

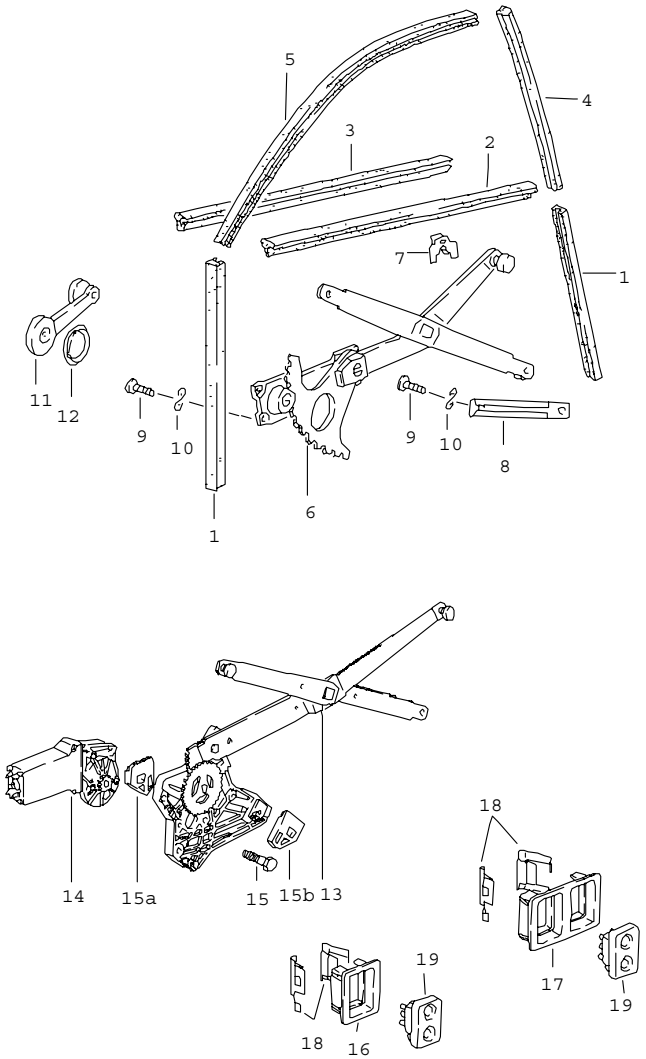

Pos	Part Number	Name	Remarks	Qty	Model
		installation parts door glass power windows			
1	477 837 385	window guide		4	
2	477 837 469 A	sealing outer	/L	1	
(2)	477 837 470 A	sealing outer	/R	1	
3	477 837 471 A	seal inner		2	
4	477 837 479 A	window guide		2	
5	477 837 493 A	window guide	/L	1	
(5)	477 837 494 A	window guide	/R	1	
6	477 837 441 A	power windows	/L	1	
(6)	477 837 442 A	power windows	/R	1	
7	171 837 485	clamp		10	
8	477 837 589	guide rail		2	
9	999 217 029 02	hexagon-head bolt M 6 X 10 self-locking		12	
10	N 011 652 1	washer A 7 X 12		12	
11	321 837 581	window crank		2	
	01C	black			
	90V	brown			
12	111 837 595 A	desk pad		2	
	01C	black			
	90V	brown			
13	477 837 391 C	cross-arm power window	/L	1	
(13)	477 837 392 C	cross-arm power window	/R	1	
14	477 959 123 A	engine and transmission	/L	1	
(14)	477 959 124 A	engine and transmission	/R	1	

Pos	Part Number	Name	Remarks	Qty	Model
15	N 014 228 4	countersunk-head screw AM 6 X 12		6	
15A	477 837 397	stop upper	/L	1	
15B	477 837 398	stop	/R	1	
15A	477 837 397	stop lower	/R	1	
15B	477 837 398	stop	/L	1	
16	477 867 185 A	mounting piece		1	
	1DB	black			
	4RB	brown			
17	477 867 187 A	mounting piece		1	
	1DB	black			
	4RB	brown			
18	477 867 189	spring clamp		4	
19	477 959 622	tip switch		3	
	01C	black			
	89S	brown			
		harness for power window			
-	477 971 160 A	harness dashboard	/LL -83	1	
-	944 612 031 00	harness dashboard	/LL 84-	1	
-	945 612 031 00	harness dashboard	/RL -83	1	
-	945 612 031 00	harness dashboard	/RL 84-	1	
-	477 971 161	harness dashboard		1	
-	477 971 162	harness passenger's door		1	
-	321 919 505	relay	-83	1	
-	944 615 112 01	relay	84-	1	
-	N 017 121 5	safety fuse 25 A		1	

- -- E N D -- -

Model	Year	MG	SG	Illustration	Restrictions	Update	10:39	07.04.2005	PORSCHE PET PORSCHE
944	85	8	05	805-00		187			

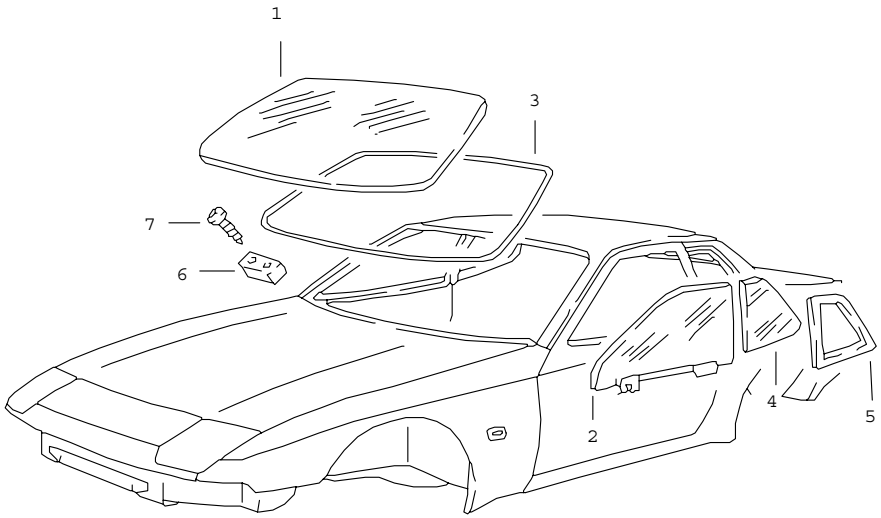

Pos	Part Number	Name	Remarks	Qty	Model
		windows			
1	477 845 011 D	windscreen clear		1	
(1)	477 845 011 E	windscreen tinted		1	
(1)	477 845 011 F	windscreen tinted upper part: dark green		1	
-	477 845 043	adhesive plate interior mirror		1	
2	E 944 542 023 00	door glass clear	/L	1	
(2)	944 542 023 01	door glass tinted	/L	1	
(2)	944 542 024 00	door glass clear	/R	1	
(2)	944 542 024 01	door glass tinted	/R	1	
3	477 898 011 A	sealing set windscreen		1	
4	477 845 311	side window clear	/L	1	
(4)	477 845 311 A	side window tinted	/L	1	
(4)	477 845 312	side window clear	/R	1	
(4)	477 845 312 A	side window tinted	/R	1	
5	944 557 321 00	rubber seal side window	/L	1	
(5)	944 557 322 00	rubber seal side window	/R	1	
6	477 845 613 A	stop		2	
7	900 143 046 07	tapping screw B 4,8 X 16		4	
		- -- E N D -- -			

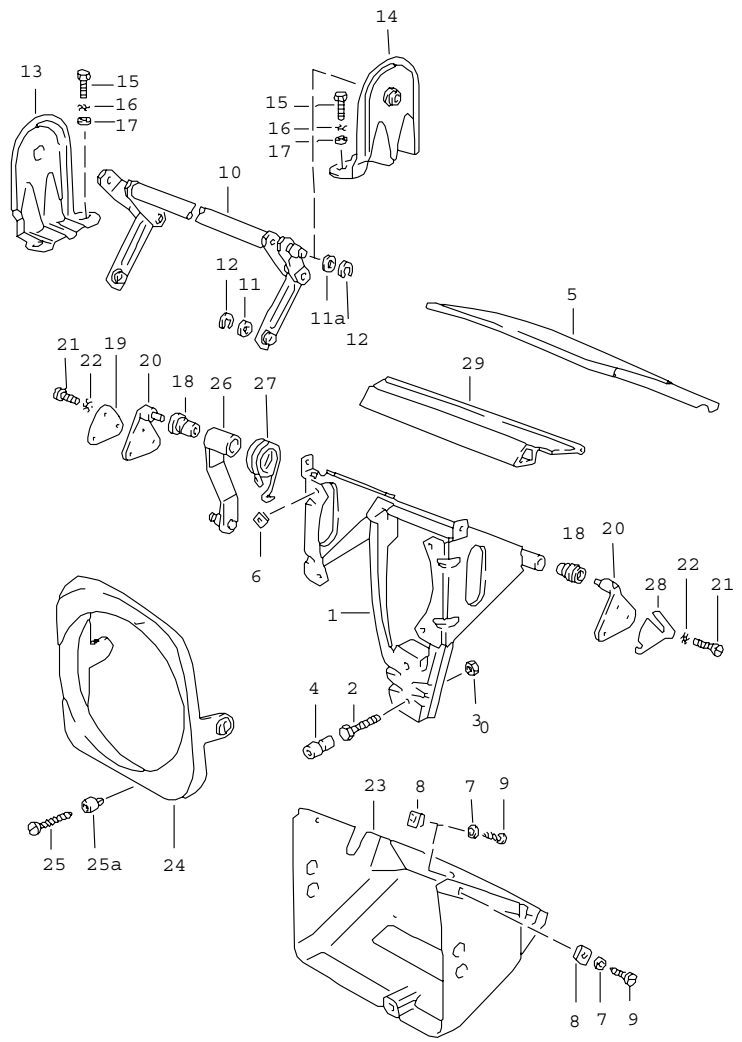

Pos	Part Number	Name	Remarks	Qty	Model
		pop-up headlight			
1	944 750 605 00	swivel frame	/L	1	
(1)	944 750 606 00	swivel frame	/R	1	
2	N 010 221 3	hexagon-head bolt M 6 X 35		2	
3	900 076 010 02	hexagon nut M 6		2	
4	914 504 319 00	grommet		2	
5	477 805 611	housing cover	/L	1	
(5)	477 805 612	housing cover	/R	1	
6	999 507 252 02	nut B 4,2 X 17		8	
7	900 151 028 02	washer 4,1		4	
8	N 015 438 1	speed nut B 3,5 X 16,5		10	
9	N 014 086 4	tapping screw B 3,5 X 9,13		10	
10	477 805 615	control shaft		1	
11	N 011 525 13	washer		2	
11A	477 805 695	washer		1	
12	N 012 436 2	lock washer 6		3	
13	477 805 617	bearing bracket		1	
14	477 805 622	bearing bracket		1	
15	N 010 215 13	hexagon-head bolt M 6 X 15		4	
16	N 012 105 3	serrated lock washer A 6,4		4	
17	N 011 524 7	washer A 6,4		4	
18	477 805 623	bush		4	
19	914 750 169 10	plate		4	
20	914 750 271 10	bearing bracket		4	

Pos	Part Number	Name	Remarks	Qty	Model
21	N 010 210 7	hexagon-head bolt M 6 X 10		12	
22	N 012 105 3	serrated lock washer A 6,4		12	
23	944 750 631 00	housing	/L	1	
(23)	944 750 632 00	housing	/R	1	
24	477 805 633	retaining ring	/L	1	
(24)	477 805 634	retaining ring	/R	1	
25	N 043 979 2	tapping screw BZ 4,2 X 45		2	
25A	477 857 173	clip		2	
26	477 805 651	lever		2	
27	477 805 661	spring	/L	1	
(27)	477 805 662	spring	/R	1	
28	477 805 663	desk pad		X	
29	477 853 363	cover strip	/L	1	
(29)	477 853 364	cover strip	/R	1	
		- -- E N D -- -			

Pos	Part Number	Name	Remarks	Qty	Model

Model	Year	MG	SG	Illustration	Restrictions	Update				
944	85	8	07	807-00		187	10:39	07.04.2005	PORSCHE	PET	PORSCHE

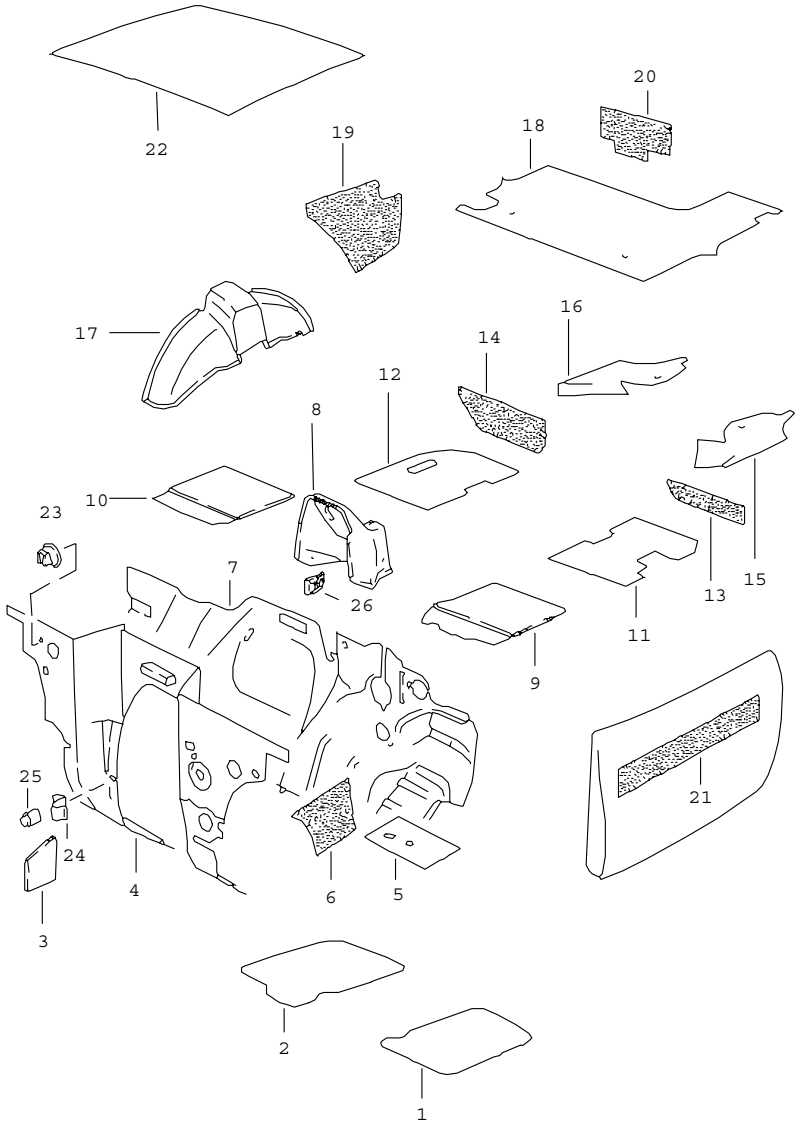

Pos	Part Number	Name	Remarks	Qty	Model
		sound absorber			
1	477 863 771	sound absorber engine compartment	/L	1	
2	477 863 772	sound absorber	/R	1	
3	477 863 871	heat protection side member	/R	1	
4	944 556 089 00	insulation	/LL	1	
(4)	E 945 556 089 01	insulation pour engine compartment	/RL	1	
5	477 863 849	insulation	/L	1	
6	477 863 837	sound absorber	/L -83	1	
(6)	477 863 838	sound absorber side section	/R -83	1	
6	944 556 083 00	sound absorber	/LL/L84-	1	
(6)	E 944 556 084 00	sound absorber side section	/LL/R84-	1	
6	E 945 556 083 00	sound absorber	/RL/L84-	1	
(6)	945 556 084 00	sound absorber side section	/RL/R84-	1	
7	E 477 863 855 E	insulation	/LL	1	
(7)	477 863 855 F	insulation firewall	/LL	1	M 573
8	E 477 863 667 A	sound absorber	/V	1	
9	477 863 775	sound absorber floor	/V	1 1	
(9)	478 863 775	sound absorber	/RL/L	1	
10	477 863 776	sound absorber	/LL/R	1	
(10)	478 863 776	sound absorber	/RL/R	1	
11	477 863 773	sound absorber floor	/H/L	1	
12	477 863 774	sound absorber	/R	1	
13	944 556 085 00	sound absorber	/L	1	
(13)	944 556 086 00	sound absorber cross member	/R	1	

Pos	Part Number	Name	Remarks	Qty	Model
(14)	477 863 845 A	sound absorber	/L	1	
14	477 863 846 A	sound absorber heel plate	/R	1	
15	944 556 777 01	sound absorber	/L	1	
16	944 556 778 01	sound absorber	/R	1	
(17)	944 556 885 00	sound absorber	/L	1	
17	944 556 886 00	sound absorber wheel housing	/R	1	
18	944 556 079 00	sound absorber boot floor plate		1	
(19)	477 863 865	insulation side section	/L	1	
19	477 863 866	sound absorber side section	/R	1	
20	477 863 867	insulation spare-wheel well		1 1	
21	993 556 521 00	insulation door		2	
22	944 556 609 00	sound absorber roof		1	
23	999 049 002 40	push button		13	
24	944 556 849 00	clip		6	
25	999 049 001 40	plastic nut		6	
26	N 900 661 01	clamping washer		5	
		- -- E N D -- -			

Pos	Part Number	Name	Remarks	Qty	Model

Model	Year	MG	SG	Illustration	Restrictions	Update				
944	85	8	07	807-05		187	10:40	07.04.2005	PORSCHE	PET	PORSCHE

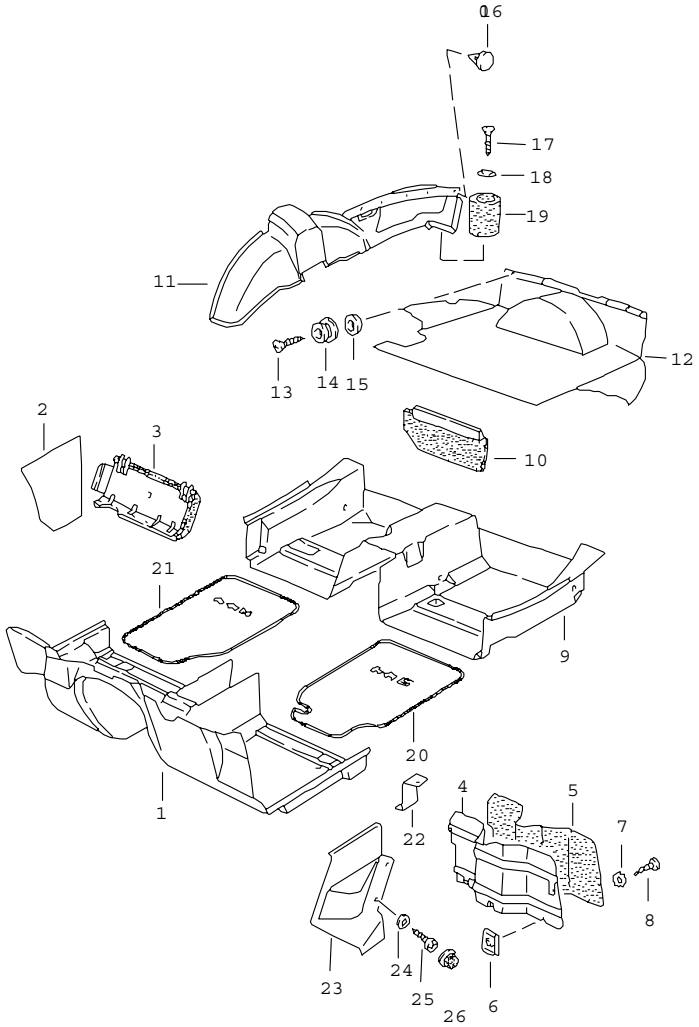

Pos	Part Number	Name	Remarks	Qty	Model
		linings			
1	477 863 703 G	floor mat	/LL/V	1	
	3BF	black			
	1NF	beige	-82		
	8NF	brown			
	4BF	grey			
	3FF	grey-beige	83-		
(1)	477 863 703 M	floor mat	/LL/V	1	M 573
	3BF	black			
	1NF	beige	-82		
	8NF	brown			
	4BF	grey			
	3FF	grey-beige	83-		
(1)	478 863 703 G	floor mat	/RL/V	1	
	3BF	black			
	1NF	beige	-82		
	8NF	brown			
	4BF	grey			
	3FF	grey-beige	83-		
(2)	477 863 581 A	lining	/L -83	1	
	3BF	black			
	1NF	beige	-82		
	8NF	brown			
	4BF	grey			
	3FF	grey-beige	83-		
2	477 863 582 A	lining	/R	1	
	3BF	black			
	1NF	beige	-82		
	8NF	brown			

Pos	Part Number	Name	Remarks	Qty	Model
	4BF	grey			
	3FF	grey-beige	83-		
(2)	477 863 582 B	lining	/LL/R	1	M 573
	3BF	black			
	1NF	beige	-82		
	8NF	brown			
	4BF	grey			
	3FF	grey-beige	83-		
(2)	945 555 081 00	lining	/L 84-	1	
	3BF	black			
	8NF	brown			
	4BF	grey			
	3FF	grey-beige			
-	478 863 767	carpet foot support	/RL/R	1	
	3BF	black			
	1NF	beige	-82		
	8NF	brown			
	4BF	grey			
	3FF	grey-beige	83-		
-	478 863 767 A	carpet foot support	/RL/R	1	AUT.
	3BF	black			
	1NF	beige	-82		
	8NF	brown			
	4BF	grey			
	3FF	grey-beige	83-		
3	477 820 412	knee protection trim	/LL	1	M 573
	05T	black F >>94CN4 03921 F >>94DN4 00108			(J)
	21S	brown F >>94CN4 03921 F >>94DN4 00108			(J)
	1DB	black F 94DN4 00111>> F 94DN4 00109>>			(J)
	4RB	brown F 94DN4 00111>> F 94DN4 00109>>			(J)
4	478 863 751	foot support	/RL/L	1	M 573
5	478 863 381	carpet foot support	/RL/L	1	M 573
	3BF	black			
	1NF	beige	82		
	8NF	brown			
	4BF	grey			
	3FF	grey-beige	83-		
6	N 015 458 1	speed nut	/RL	5	M 573
7	900 151 027 02	washer	/RL	5	M 573
8	N 013 968 7	tapping screw 4,8 X 13	/RL	5	M 573
9	477 863 717 B	floor mat	/LL/H	1	
	3BF	black			
	1NF	beige	82		
	8NF	brown			
	4BF	grey			
	3FF	grey-beige	83-		
(9)	478 863 717 B	floor mat	/RL/H	1	
	3BF	black			
	1NF	beige	82		
	8NF	brown			
	4BF	grey			
	3FF	grey-beige	83-		

Pos	Part Number	Name	Remarks	Qty	Model
(10)	477 863 571 A	lining	/L	1	
	3BF	black			
	1NF	beige	82		
	8NF	brown			
	4BF	grey			
	3FF	grey-beige	83-		
10	477 863 572 A	lining	/R	1	
	3BF	black			
	1NF	beige	82		
	8NF	brown			
	4BF	grey			
	3FF	grey-beige	83-		
(11)	944 555 083 01	side trim panel	/L -83	1	
	3BF	black			
	1NF	beige	82		
	8NF	brown			
	4BF	grey			
	3FF	grey-beige	83		
11	944 555 084 01	side trim panel	/R	1	
	3BF	black			
	1NF	beige	82		
	8NF	brown			
	4BF	grey			
	3FF	grey-beige	83		
11	944 555 083 02	side trim panel	/L 84-	1	
	3BF	black			
	4BF	grey			
	8NF	brown			
	3FF	grey-beige			
11	944 555 083 03	side trim panel	/L 1.84-	1	(AUS)
	3BF	black			
	4BF	grey			
	8NF	brown			
	3FF	grey-beige			
(11)	944 555 084 02	side trim panel	/R 1.84-	1	(AUS)
	3BF	black			
	4BF	grey			
	8NF	brown			
	3FF	grey-beige			
12	944 555 063 01	boot floor lining	-83	1	
	3BF	black			
	1NF	beige	82		
	8NF	brown			
	4BF	grey			
	3FF	grey-beige	83		
12	A 944 555 063 07	boot floor lining	84-	1	
	3BF	black			
	4BF	grey			
	8NF	brown			
	3FF	grey-beige			
12	944 555 063 03	boot floor lining		1	
	3BF	black			
	4BF	grey			
	8NF	brown			
	3FF	grey-beige			
12	944 555 063 02	boot floor lining	-83	1	(GB)
	3BF	black			
	4BF	grey			

Pos	Part Number	Name	Remarks	Qty	Model
	8NF	brown			
	3FF	grey-beige			
12	944 555 063 08	boot floor lining	84-	1	(GB)
	3BF	black			
	4BF	grey			
	8NF	brown			
	3FF	grey-beige			
13	N 013 957 5	tapping screw B 3,5 X 9,5		6	
14	968 555 901 00	set of fastening parts		6	
15	900 151 027 02	washer 5,3		6	
16	477 863 747	clip		12	
	01C	black			
	90V	saddle tan			
	83S	beige	82		
	4BF	grey			
	3FF	grey-beige			
17	900 143 064 07	tapping screw B 3,5 X 25		2	
18	N 011 521 3	washer A 3,7 X 8		2	
19	999 703 176 40	stop		2	
20	944 555 913 00	floor mat with logo	/LL/L	1	
	3BF	black			
	8NF	brown			
21	944 555 914 00	floor mat with logo	/LL/R	1	
	3BF	black			
	8NF	brown			
22	944 555 263 00	bracket	/LL	1	
(22)	945 555 263 00	bracket	/RL	1	
23	944 555 061 00	lining		1	
	01C	black			
24	900 151 028 02	washer 4,1 X 12 X 0,8		2	
25	999 450 003 02	tapping screw B 3,9 X 16		2	
26	311 867 169	cap		2	
	01C	black			
	90V	saddle tan			
		- -- E N D -- -			

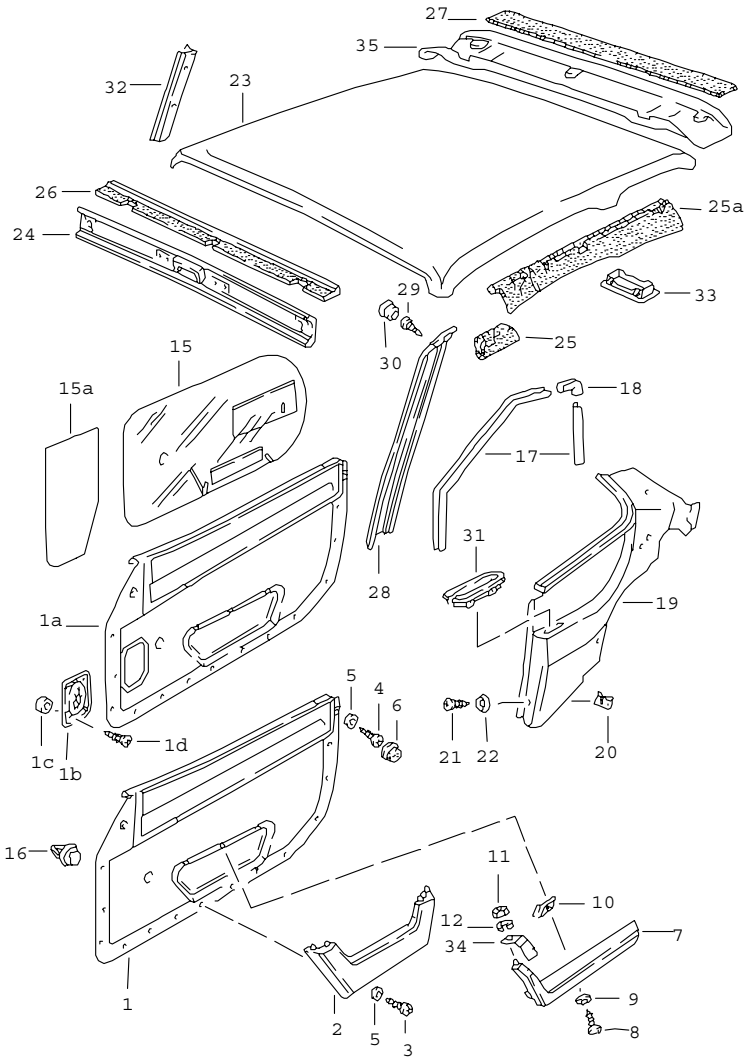

Pos	Part Number	Name	Remarks	Qty	Model
		door trim panel rooflining			
1	477 867 011 K	door trim panel power windows manually adjustable leatherette	/L	1	
	DF9	black			
	DG1	brown			
	DG2	beige/brown			
(1)	477 867 012 K	door trim panel F >>94CN4 03921 F >>94DN4 00108 power windows manually adjustable leatherette	/R	1	(J)
	DF9	black			
	DG1	brown			
	DG2	beige/brown			
1	477 867 011 K	door trim panel leatherette/ checker board velour	/L	1	
	FE5	black/ grey/black			
	FE6	brown/ beige/brown			
(1)	477 867 012 K	door trim panel F >>94CN4 03921 F >>94DN4 00108 leatherette/ checker board velour	/R	1	(J)
	FE5	black/ grey/black			
	FE6	brown/ beige/brown			
(1A)	477 867 011 Q	door trim panel power windows manually adjustable leatherette	/L	1	
	DG1	brown F >>94DN4 03821			

Pos	Part Number	Name	Remarks	Qty	Model
	JS3	grey-beige F >>94DN4 03821			
	KZ8	brown F 94DN4 03822>>			
	KZ9	grey-beige F 94DN4 03822>>			
1A	477 867 012 Q	door trim panel F 94DN4 00111>> F 94DN4 00109>> power windows manually adjustable leatherette	/R	1	(J)
	DG1	brown F >>94DN4 03821			
	JS3	grey-beige F >>94DN4 03821			
	KZ8	brown F 94DN4 03822>>			
	KZ9	grey-beige F 94DN4 03822>>			
(1A)	477 867 011 M	door trim panel power windows manually adjustable leatherette	/L	1	
	DF9	black F >>94DN4 03821			
	KZ7	black F 94DN4 03822>>			
1A	477 867 012 M	door trim panel F 94DN4 00111>> F 94DN4 00109>> power windows manually adjustable leatherette	/R	1	(J)
	DF9	black F >>94DN4 03821			
	KZ7	black F 94DN4 03822>>			
(1)	477 867 011 L	door trim panel power windows electrically adjustable leatherette	/LL/L	1	
	DF9	black			
	DG1	brown			
	DG2	beige/brown			
(1)	477 867 012 L	door trim panel power windows electrically adjustable leatherette	/LL/R	1	
	DF9	black			
	DG1	brown			
	DG2	beige/brown			
(1)	478 867 011 K	door trim panel power windows electrically adjustable leatherette	/RL/L	1	
	DF9	black			
	DG1	brown			
	DG2	beige/brown			
(1)	478 867 012 K	door trim panel F >>94CN4 03921 F >>94DN4 00108 power windows electrically adjustable leatherette	/RL/R	1	(J)
	DF9	black			
	DG1	brown			
	DG2	beige/brown			
(1)	477 867 011 L	door trim panel leatherette/ checker board velour	/LL/L	1	
	FE5	black/ grey/black			
	FE6	brown/ beige/brown			
(1)	477 867 012 L	door trim panel leatherette/ checker board velour	/LL/R	1	
	FE5	black/ grey/black			
	FE6	brown/ beige/brown			

Pos	Part Number	Name	Remarks	Qty	Model
(1)	478 867 011 K	door trim panel leatherette/ checker board velour	/RL/L	1	
	FE5	black/ grey/black			
	FE6	brown/ beige/brown			
(1)	478 867 012 K	door trim panel F >>94CN4 03921 F >>94DN4 00108 leatherette/ checker board velour	/RL/R	1	(J)
	FE5	black/ grey/black			
	FE6	brown/ beige/brown			
(1A)	477 867 011 R	door trim panel power windows electrically adjustable leatherette	/LL/L	1	
	DG1	brown F >>94DN4 03821			
	JS3	brown/grey-beige F >>94DN4 03821			
	KZ8	brown F 94DN4 03822>>			
	KZ9	brown/grey-beige F 94DN4 03822>>			
1A	477 867 012 R	door trim panel power windows electrically adjustable leatherette	/LL/R	1	
	DG1	brown F >>94DN4 03821			
	JS3	brown/grey-beige F >>94DN4 03821			
	KZ8	brown F 94DN4 03822>>			
	KZ9	brown/grey-beige F 94DN4 03822>>			
(1A)	478 867 011 N	door trim panel power windows electrically adjustable leatherette	/RL/L	1	
	DG1	brown F >>94DN4 03821			
	JS3	brown/grey-beige F >>94DN4 03821			
	KZ8	brown F 94DN4 03822>>			
	KZ9	brown/grey-beige F 94DN4 03822>>			
1A	478 867 012 N	door trim panel F 94DN4 00111>> F 94DN4 00109>> power windows electrically adjustable leatherette	/RL/R	1	(J)
	DG1	brown F >>94DN4 03821			
	JS3	brown/grey-beige F >>94DN4 03821			
	KZ8	brown F 94DN4 03822>>			
	KZ9	brown/grey-beige F 94DN4 03822>>			
(1A)	477 867 011 R	door trim panel leatherette/ checker board velour	/LL/L	1	
	JS1	brown/ brown-grey			
1A	477 867 012 R	door trim panel leatherette/ checker board velour	/LL/R	1	
	JS1	brown/ brown-grey			
(1A)	478 867 011 N	door trim panel leatherette/ checker board velour	/RL/L	1	
	JS1	brown/ brown-grey			

Pos	Part Number	Name	Remarks	Qty	Model
1A	478 867 012 N	door trim panel F 94DN4 00111>> F 94DN4 00109>> leatherette/ checker board velour	/RL/R	1	(J)
	JS1	brown/ brown-grey			
(1A)	477 867 011 R	door trim panel leatherette/ pin stripe velour	/LL/L	1	
	JS5	brown/ brown-beige			
	JS2	brown/ grey-beige-white			
1A	477 867 012 R	door trim panel leatherette/ pin stripe velour	/LL/R	1	
	JS5	brown/ brown-beige			
	JS2	brown/ grey-beige-white			
(1A)	478 867 011 N	door trim panel leatherette/ pin stripe velour	/RL/L	1	
	JS5	brown/ brown-beige			
	JS2	brown/ grey-beige-white			
1A	478 867 012 N	door trim panel F 94DN4 00111>> F 94DN4 00109>> leatherette/ pin stripe velour	/RL/R	1	(J)
	JS5	brown/ brown-beige			
	JS2	brown/ grey-beige-white			
(1A)	477 867 011 N	door trim panel power windows electrically adjustable leatherette	/LL/L	1	
	DF9	black F >>94DN4 03821			
	KZ7	black F 94DN4 03822>>			
1A	477 867 012 N	door trim panel power windows electrically adjustable leatherette	/LL/R	1	
	DF9	black F >>94DN4 03821			
	KZ7	black F 94DN4 03822>>			
(1A)	478 867 011 M	door trim panel power windows electrically adjustable leatherette	/RL/L	1	
	DF9	black F >>94DN4 03821			
	KZ7	black F 94DN4 03822>>			
1A	478 867 012 M	door trim panel F 94DN4 00111>> F 94DN4 00109>> power windows electrically adjustable leatherette	/RL/R	1	(J)
	DF9	black F >>94DN4 03821			
	KZ7	black F 94DN4 03822>>			
(1A)	477 867 011 N	door trim panel leatherette pin stripe velour	/LL/L	1	
	GM5	black/ black-white			
1A	477 867 012 N	door trim panel leatherette pin stripe velour	/LL/R	1	
	GM5	black/ black-white			
(1A)	478 867 011 M	door trim panel leatherette pin stripe velour	/RL/L	1	
	GM5	black/ black-white			

Pos	Part Number	Name	Remarks	Qty	Model
1A	478 867 012 M	door trim panel F 94DN4 00111>> F 94DN4 00109>> leatherette pin stripe velour	/RL/R	1	(J)
	GM5	black/ black-white			
(1A)	477 867 011 N	door trim panel power windows electrically adjustable leatherette/ pin stripe velour	/L	1	
	PL9	black/ black-red	84		(CH)
1A	477 867 012 N	door trim panel power windows electrically adjustable leatherette/ pin stripe velour	/R	1	
	PL9	black/ black-red	84		(CH)
(1A)	477 867 011 N	door trim panel leatherette/ checker board velour	/L	1	
	JR9	black/ light grey-black			
1A	477 867 012 N	door trim panel leatherette/ checker board velour	/R	1	
	JR9	black/ light grey-black			
1B	477 867 081	cover loudspeaker		2	
	01C	black			
	89S	brown F >>94DN4 05889			
1B	477 867 081 A	cover loudspeaker		2	
	4RB	brown F 94DN4 05890>>			
1C	477 035 375	bush		8	

Pos	Part Number	Name	Remarks	Qty	Model
1D	N 014 091 4	tapping screw B 3,9 X 16		8	
-	N 100 472 01	speed nut		8	
-	999 507 071 00	speed nut		2	
(2)	477 867 033 A	package box	/L	1	
	1NF	beige	-6.82		
	3BF	black F >>94DN4 03821			
	8NF	brown F >>94DN4 03821			
	3FF	grey-beige F >>94DN4 03821			
	1DB	black			
	4RB	brown F 94DN4 03822>>			
	1DX	grey-beige F 94DN4 03822>>			
2	477 867 034 A	package box	/R	1	
	1NF	beige	-6.82		
	3BF	black F >>94DN4 03821			
	8NF	brown F >>94DN4 03821			
	3FF	grey-beige F >>94DN4 03821			
	1DB	black			
	4RB	brown F 94DN4 03822>>			
	1DX	grey-beige F 94DN4 03822>>			
3	N 013 962 2	tapping screw B 3,9 X 16		6	
4	311 867 167	tapping screw 4,2		4	
5	900 151 028 02	washer 4,3		10	

Pos	Part Number	Name	Remarks	Qty	Model
6	311 867 169	cap		4	
	01C	black			
	90V	saddle tan			
(7)	477 867 171	armrest	/L	1	
	041	black			
	89S	brown			
	5FX	grey-beige			
7	477 867 172	armrest	/R	1	
	041	black			
	89S	brown			
	5FX	grey-beige			
8	900 143 046 02	tapping screw B 4,8 X 16		6	
9	N 012 222 4	spring washer A 5		6	
10	999 591 722 02	speed nut B 4,8 X 19,8		6	
11	900 910 010 09	lock nut M 6		2	
12	N 011 524 7	washer 6		2	
(15)	477 867 177 D	sealing film	/L	1	
15	477 867 178 D	sealing film door trim panel	/R	1	
(15A)	477 867 179	sealing film	/L	1	
15A	477 867 180	sealing film loudspeaker	/R	1	
16	823 867 299	clip		27	
17	477 867 367	piping door		4	
18	477 867 371	end piece		2	
(19)	944 555 021 00	side trim panel	/L	1	
	1DB	black			
	4RB	brown			
19	944 555 022 00	side trim panel	/R	1	
	1DB	black			
	4RB	brown			
(19)	944 555 021 01	side trim panel	/L	1	M 186
	1DB	black			
	4RB	brown			
19	944 555 022 01	side trim panel	/R	1	M 186
	1DB	black			
	4RB	brown			
-	111 857 785	plug		2	
-	111 857 795	cover disc		2	
20	N 015 438 1	speed nut B 3,5 X 16,5		2	
21	N 014 087 5	rais. counters. h. tap. s. B 3,5 X 16		4	
22	N 011 578 1	cone washer 3,7		4	
23	477 867 503	rooflining		1	
	05T	black			
	21S	brown F >>94DN4 03821			
	4RB	brown F 94DN4 03822>>			
(23)	477 867 501 A	rooflining	-83	1	M 650
	05T	black			
	21S	brown F >>94DN4 03821			
	4RB	brown F 94DN4 03822>>			
(23)	A 944 555 051 01	rooflining	84-	1	M 650
	4RB	brown			
(23)	944 555 519 00	rooflining	84-	1	M 650

Pos	Part Number	Name	Remarks	Qty	Model
	05T	black			
	4RB	brown			
-	477 867 543	bow		3	
24	477 867 511	lining roof frame	/V	1	
	1DB	black			
	4RB	brown			
25A	E 944 555 115 00	roof frame padding	/L	1	
(25)	944 555 116 00	roof frame padding	/R -83	1	
(25A)	944 555 116 00	roof frame padding	/R 84-	1	
26	477 867 531	roof frame padding	/V -83	1	M 650
(26)	944 564 531 01	roof frame padding	/V 84-	1	M 650
27	477 867 533	roof frame padding	/H -83	1	M 650
28	477 867 553 A	lining windscreen frame	/L	1	
	1DB	black			
	4RB	brown			
(28)	477 867 554 A	lining windscreen frame	/R	1	
	1DB	black			
	4RB	brown			
29	N 013 962 2	tapping screw B 3,9 X 16		6	
30	914 552 233 10	filler piece		6	
	01C	black			
	90V	saddle tan			
31	477 867 653	rose		2	
32	477 867 655	lining centre pillar	/L	1	
	05T	black			
	21S	brown F >>94DN4 03821			
	4RB	brown F 94DN4 03822>>			
(32)	477 867 656	lining centre pillar	/R	1	
	05T	black			
	21S	brown F >>94DN4 03821			
	4RB	brown F 94DN4 03822>>			
33	477 867 923 A	cap		2	
	01C	black			
	89S	cadbury brown			
(34)	477 867 153	fastening hook	/L	1	
34	477 867 154	fastening hook armrest	/R	1	
35	944 555 941 00	lining roof frame	/H 84-	1	M 650
	05T	black			
	4RB	brown			
		- -- E N D -- -			

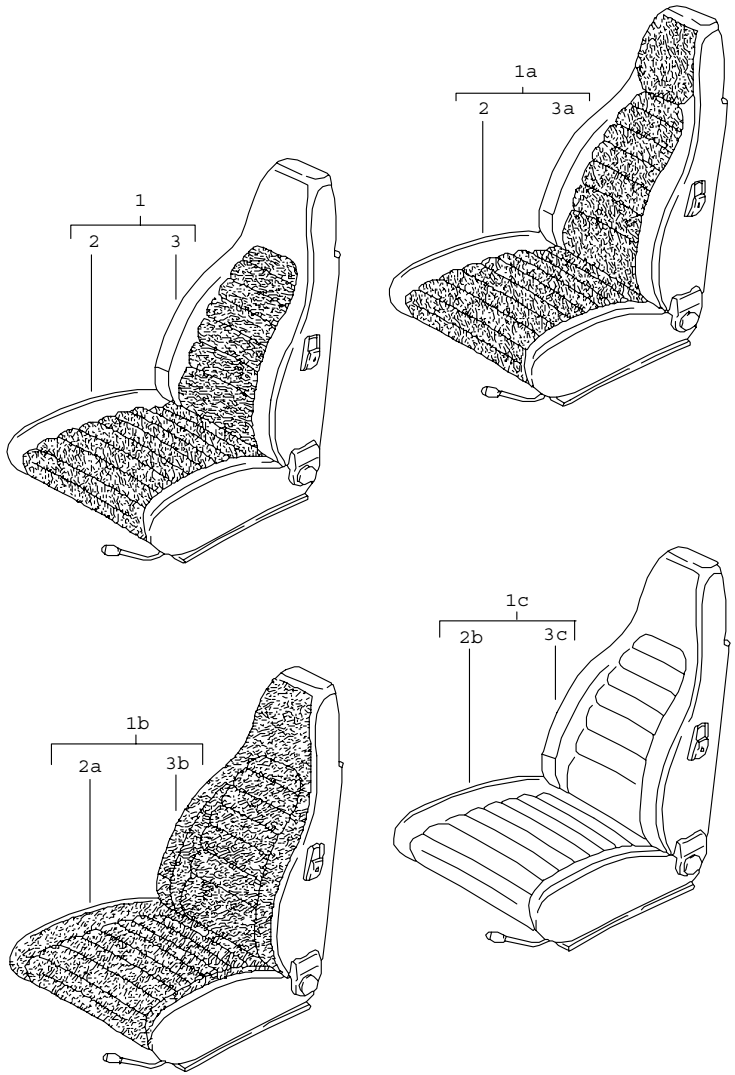

Pos	Part Number	Name	Remarks	Qty	Model
		front seat complete seat cover			
1	A 477 881 021 E	front seat leatherette/ centre part pin stripe velour	/L	1	
	FD5	black/ black-white F >>94DN4 03821			
	FD6	brown/ brown-beige F >>94DN4 03821			
	FD7	beige/ brown-beige	-6.82		
	JR7	grey-beige/ grey-beige-white F >>94DN4 03821			
	JN1	black/ black-white F 94DN4 03822>>			
	JN2	brown/ brown-beige F 94DN4 03822>>			
	LD4	grey-beige/ grey-beige-white F 94DN4 03822>>			
(1)	A 477 881 022 E	front seat leatherette/ centre part pin stripe velour	/R	1	
	FD5	black/ black-white F >>94DN4 03821			
	FD6	brown/ brown-beige F >>94DN4 03821			
	FD7	beige/ brown-beige	-6.82		
	JR7	grey-beige/ grey-beige-white F >>94DN4 03821			

Pos	Part Number	Name	Remarks	Qty	Model
	JN1	black/ black-white F 94DN4 03822>>			
	JN2	brown/ brown-beige F 94DN4 03822>>			
	LD4	grey-beige/ grey-beige-white F 94DN4 03822>>			
1A	A 477 881 021 E	front seat leatherette/ centre part checker board velour	/L	1	
	FD8	black/ grey/black	-6.82		
	FD9	brown/ beige/brown	-6.82		
	FE1	beige/ beige/brown	-6.82		
	JR4	black/ light grey-black F >>94DN4 03821			
	JR5	brown/ brown-grey F >>94DN4 03821			
	JR6	grey-beige/ brown-grey F >>94DN4 03821			
	LD5	black/ light grey-black F 94DN4 03822>>			
	LD6	brown/ brown-grey F 94DN4 03822>>			
	LD7	grey-beige/ brown-grey F 94DN4 03822>>			
(1A)	A 477 881 022 E	front seat leatherette/ centre part checker board velour	/R	1	
	FD8	black/ grey/black	-6.82		
	FD9	brown/ beige/brown	-6.82		
	FE1	beige/ beige/brown	-6.82		
	JR4	black/ light grey-black F >>94DN4 03821			
	JR5	brown/ brown-grey F >>94DN4 03821			
	JR6	grey-beige/ brown-grey F >>94DN4 03821			
	LD5	black/ light grey-black F 94DN4 03822>>			
	LD6	brown/ brown-grey F 94DN4 03822>>			
	LD7	grey-beige/ brown-grey F 94DN4 03822>>			
1A	A 477 881 021 E	front seat leatherette/ centre part porsche lettering cloth	/L	1	
	LR6	black/black	84		
	LR7	brown/brown	84		
	LR8	grey-beige/grey-beige	84		
	PX1	black/black	85		
	PX3	brown/brown	85		
	QD8	grey-beige/grey-beige	85		
(1A)	A 477 881 022 E	front seat leatherette/ centre part porsche lettering cloth	/R	1	
	LR6	black/black	84		
	LR7	brown/brown	84		
	LR8	grey-beige/grey-beige	84		

Pos	Part Number	Name	Remarks	Qty	Model
	PX1	black/black	85		
	PX3	brown/brown	85		
	QD8	grey-beige/grey-beige	85		
1B	A 477 881 021 E	front seat leatherette/ seat and backrest surface berber cloth	/L	1	
	GE9	black/ grey/black F >>94DN4 03821			
	FE3	brown/ beige/brown F >>94DN4 03821			
	FE4	beige/ beige/brown	-6.82		
	JR8	grey-beige/ grey-beige-grey F >>94DN4 03821			
	JM3	black/ grey/black F 94DN4 03822>>			
	JM4	brown/ beige/brown F 94DN4 03822>>			
	JM9	grey-beige/ grey-beige-grey F 94DN4 03822>>			
(1B)	A 477 881 022 E	front seat leatherette/ seat and backrest surface berber cloth	/R	1	
	GE9	black/ grey/black F >>94DN4 03821			
	FE3	brown/ beige/brown F >>94DN4 03821			
	FE4	beige/ beige/brown	-6.82		
	JR8	grey-beige/ grey-beige-grey F >>94DN4 03821			
	JM3	black/ grey/black F 94DN4 03822>>			
	JM4	brown/ beige/brown F 94DN4 03822>>			
	JM9	grey-beige/ grey-beige-grey F 94DN4 03822>>			
1B	A 477 881 021 L	front seat leatherette/ seat and backrest surface porsche lettering cloth	/L 84-	1	
	LR1	black/black	84		
	LR2	brown/brown	84		
	LR3	grey-beige/grey-beige	84		
	PX2	black/black	85		
	PX4	brown/brown	85		
	QD9	grey-beige/grey-beige	85		
(1B)	A 477 881 022 L	front seat leatherette/ seat and backrest surface porsche lettering cloth	/R 84-	1	
	LR1	black/black	84		
	LR2	brown/brown	84		
	LR3	grey-beige/grey-beige	84		
	PX2	black/black	85		
	PX4	brown/brown	85		
	QD9	grey-beige/grey-beige	85		
1B	A 477 881 021 L	front seat leatherette/ seat and backrest surface pin stripe velour	/L 84-	1	
	PL8	black/ black-red	84		(CH)
(1B)	A 477 881 022 L	front seat leatherette/ seat and backrest surface pin stripe velour	/R 84-	1	

Pos	Part Number	Name	Remarks	Qty	Model
	PL8	black/ black-red	84		(CH)
1C	A 477 881 021 F	front seat leatherette	/L	1	
	DD2	beige	-6.82		
	DD4	brown F >>94DN4 03821			
	DD6	black F >>94DN4 03821			
	4FK	grey-beige F >>94DN4 03821			
	MC3	black F 94DN4 03822>>			
	MC4	brown F 94DN4 03822>>			
	MC5	grey-beige F 94DN4 03822>>			
(1C)	A 477 881 022 F	front seat leatherette	/R	1	
	DD2	beige	-6.82		
	DD4	brown F >>94DN4 03821			
	DD6	black F >>94DN4 03821			
	4FK	grey-beige F >>94DN4 03821			
	MC3	black F 94DN4 03822>>			
	MC4	brown F 94DN4 03822>>			
	MC5	grey-beige F 94DN4 03822>>			
1C	A 477 881 021 K	front seat leatherette/leather centre part not perforated	/L	1	
	QE1	black/black F 94DN4 03822>>94EN4 02899			
	QE2	brown/brown F 94DN4 03822>>94EN4 02899			
	QE3	grey-beige/grey-beige F 94DN4 03822>>94EN4 02899			
(1C)	A 477 881 022 K	front seat leatherette/leather centre part not perforated	/R	1	
	QE1	black/black F 94DN4 03822>>94EN4 02899			
	QE2	brown/brown F 94DN4 03822>>94EN4 02899			
	QE3	grey-beige/grey-beige F 94DN4 03822>>94EN4 02899			
1C	A 477 881 021 K	front seat leatherette/leather centre part perforated	/L	1	
	JN3	black/black F 94EN4 02900>>			
	JN4	brown/brown F 94EN4 02900>>			
	JN5	grey-beige/grey-beige F 94EN4 02900>>			
(1C)	A 477 881 022 K	front seat leatherette/leather centre part perforated	/R	1	
	JN3	black/black F 94EN4 02900>>			
	JN4	brown/brown F 94EN4 02900>>			
	JN5	grey-beige/grey-beige F 94EN4 02900>>			
2	A 911 521 037 58	seat cover leatherette/ centre part pin stripe velour	/L	1	
	FD5	black/ black-white F >>94DN4 03821			

Pos	Part Number	Name	Remarks	Qty	Model
	FD6	brown/ brown-beige F >>94DN4 03821			
	FD7	beige/ brown-beige	-6.82		
	JR7	grey-beige/ grey-beige-white F >>94DN4 03821			
	JN1	black/ black-white F 94DN4 03822>>			
	JN2	brown/ brown-beige F 94DN4 03822>>			
	LD4	grey-beige/ grey-beige-white F 94DN4 03822>>			
(2)	A 911 521 038 58	seat cover leatherette/ centre part pin stripe velour	/R	1	
	FD5	black/ black-white F >>94DN4 03821			
	FD6	brown/ brown-beige F >>94DN4 03821			
	FD7	beige/ brown-beige	-6.82		
	JR7	grey-beige/ grey-beige-white F >>94DN4 03821			
	JN1	black/ black-white F 94DN4 03822>>			
	JN2	brown/ brown-beige F 94DN4 03822>>			
	LD4	grey-beige/ grey-beige-white F 94DN4 03822>>			

Pos	Part Number	Name	Remarks	Qty	Model
2	A 911 521 037 58	seat cover leatherette/ centre part checker board velour	/L	1	
	FD8	black/ grey/black	-6.82		
	FD9	brown/ beige/brown	-6.82		
	FE1	beige/ beige/brown	-6.82		
	JR4	black/ light grey-black F >>94DN4 03821			
	JR5	brown/ brown-grey F >>94DN4 03821			
	JR6	grey-beige/ brown-grey F >>94DN4 03821			
	LD5	black/ light grey-black F 94DN4 03822>>			
	LD6	brown/ brown-grey F 94DN4 03822>>			
	LD7	grey-beige/ brown-grey F 94DN4 03822>>			
(2)	A 911 521 038 58	seat cover leatherette/ centre part checker board velour	/R	1	
	FD8	black/ grey/black	-6.82		
	FD9	brown/ beige/brown	-6.82		
	FE1	beige/ beige/brown	-6.82		
	JR4	black/ light grey-black F >>94DN4 03821			

Pos	Part Number	Name	Remarks	Qty	Model
	JR5	brown/ brown-grey F >>94DN4 03821			
	JR6	grey-beige/ brown-grey F >>94DN4 03821			
	LD5	black/ light grey-black F 94DN4 03822>>			
	LD6	brown/ brown-grey F 94DN4 03822>>			
	LD7	grey-beige/ brown-grey F 94DN4 03822>>			
2	A 911 521 037 58	seat cover leatherette/ centre part porsche lettering cloth	/L	1	
	LR6	black/black	84		
	LR7	brown/brown	84		
	LR8	grey-beige/grey-beige	84		
	PX1	black/black	85		
	PX3	brown/brown	85		
	QD8	grey-beige/grey-beige	85		
(2)	A 911 521 038 58	seat cover leatherette/ centre part porsche lettering cloth	/R	1	
	LR6	black/black	84		
	LR7	brown/brown	84		
	LR8	grey-beige/grey-beige	84		
	PX1	black/black	85		
	PX3	brown/brown	85		
	QD8	grey-beige/grey-beige	85		
2A	A 911 521 037 58	seat cover leatherette/ seat surface berber cloth	/L	1	
	GE9	black/ grey/black F >>94DN4 03821			
	FE3	brown/ beige/brown F >>94DN4 03821			
	FE4	beige/ beige/brown	-6.82		
	JM3	black/ grey/black F 94DN4 03822>>	1.83-		
	JM4	brown/ beige/brown F 94DN4 03822>>	1.83-		
	JM9	grey-beige/ grey-beige-grey F 94DN4 03822>>	1.83-		
(2A)	A 911 521 038 58	seat cover leatherette/ seat surface berber cloth	/R	1	
	GE9	black/ grey/black F >>94DN4 03821			
	FE3	brown/ beige/brown F >>94DN4 03821			
	FE4	beige/ beige/brown	-6.82		
	JM3	black/ grey/black F 94DN4 03822>>	1.83-		
	JM4	brown/ beige/brown F 94DN4 03822>>	1.83-		
	JM9	grey-beige/ grey-beige-grey F 94DN4 03822>>	1.83-		
2A	A 911 521 037 17	seat cover leatherette/ seat surface porsche lettering cloth	/L 84-	1	
	LR1	black/black	84		

Pos	Part Number	Name	Remarks	Qty	Model
	LR2	brown/brown	84		
	PX2	black/black	85		
	PX4	brown/brown	85		
	QD9	grey-beige/grey-beige	85		
(2A)	A 911 521 038 17	seat cover leatherette/ seat surface porsche lettering cloth	/R 84-	1	
	LR1	black/black	84		
	LR2	brown/brown	84		
	PX2	black/black	85		
	PX4	brown/brown	85		
	QD9	grey-beige/grey-beige	85		
2A	A 911 521 037 17	seat cover leatherette/ seat surface pin stripe velour	/L 84-	1	
	PL8	black/ black-red	84		(CH)
(2A)	A 911 521 038 17	seat cover leatherette/ seat surface pin stripe velour	/R 84-	1	
	PL8	black/ black-red	84		(CH)
2B	A 911 521 037 57	seat cover leatherette	/L	1	
	DD2	beige	-6.82		
	DD4	brown F >>94DN4 03821			
	DD6	black F >>94DN4 03821			
	4FK	grey-beige F >>94DN4 03821			
	MC3	black F 94DN4 03822>>			
	MC4	brown F 94DN4 03822>>			
	MC5	grey-beige F 94DN4 03822>>			
(2B)	A 911 521 038 57	seat cover leatherette	/R	1	
	DD2	beige	-6.82		
	DD4	brown F >>94DN4 03821			
	DD6	black F >>94DN4 03821			
	4FK	grey-beige F >>94DN4 03821			
	MC3	black F 94DN4 03822>>			
	MC4	brown F 94DN4 03822>>			
	MC5	grey-beige F 94DN4 03822>>			
2B	A 911 521 037 75	seat cover leatherette/leather centre part not perforated	/L	1	
	QE1	black/black F 94DN4 03822>>94EN4 02899			
	QE2	brown/brown F 94DN4 03822>>94EN4 02899			
	QE3	grey-beige/grey-beige F 94DN4 03822>>94EN4 02899			
(2B)	A 911 521 038 75	seat cover leatherette/leather centre part not perforated	/R	1	
	QE1	black/black F 94DN4 03822>>94EN4 02899			
	QE2	brown/brown F 94DN4 03822>>94EN4 02899			
	QE3	grey-beige/grey-beige F 94DN4 03822>>94EN4 02899			

Pos	Part Number	Name	Remarks	Qty	Model
2B	A 911 521 037 75	seat cover leatherette/leather medium brown perforated	/L	1	
	JN3	black/black F 94EN4 02900>>			
	JN4	brown/brown F 94EN4 02900>>			
	JN5	grey-beige/grey-beige F 94EN4 02900>>			
(2B)	A 911 521 038 75	seat cover leatherette/leather medium brown perforated	/R	1	
	JN3	black/black F 94EN4 02900>>			
	JN4	brown/brown F 94EN4 02900>>			
	JN5	grey-beige/grey-beige F 94EN4 02900>>			
3	A 911 521 072 59	backrest cover leatherette/ centre part pin stripe velour		2	
	FD5	black/ black-white F >>94DN4 03821			
	FD6	brown/ brown-beige F >>94DN4 03821			
	FD7	beige/ brown-beige	-6.82		
	JR7	grey-beige/ grey-beige-white F >>94DN4 03821			
	JN1	black/ black-white F 94DN4 03822>>			
	JN2	brown/ brown-beige F 94DN4 03822>>			
	LD4	grey-beige/ grey-beige-white F 94DN4 03822>>			
3A	A 911 521 072 59	backrest cover leatherette/ centre part checker board velour		2	
	FD8	black/ grey/black	-6.82		
	FD9	brown/ beige/brown	-6.82		
	FE1	beige/ beige/brown	-6.82		
	JR4	black/ light grey-black F >>94DN4 03821			
	JR5	brown/ brown-grey F >>94DN4 03821			
	JR6	grey-beige/ brown-grey F >>94DN4 03821			
	LD5	black/ light grey-black F 94DN4 03822>>			
	LD6	brown/ brown-grey F 94DN4 03822>>			
	LD7	grey-beige/ brown-grey F 94DN4 03822>>			
3A	A 911 521 072 59	backrest cover leatherette/ centre part porsche lettering cloth		2	
	LR6	black/black	84		
	LR7	brown/brown	84		
	LR8	grey-beige/grey-beige	84		
	PX1	black/black	85		
	PX3	brown/brown	85		
	QD8	grey-beige/grey-beige	85		

Pos	Part Number	Name	Remarks	Qty	Model
3B	A 911 521 072 59	backrest cover leatherette/ backrest surface berber cloth		2	
	GE9	black/ grey/black F >>94DN4 03821			
	FE3	brown/ beige/brown F >>94DN4 03821			
	FE4	beige/ beige/brown	-6.82		
	JR8	grey-beige/ grey-beige-grey F >>94DN4 03821			
	JM3	black/ grey/black F 94DN4 03822>>			
	JM4	brown/ beige/brown F 94DN4 03822>>			
	JM9	grey-beige/ grey-beige-grey F 94DN4 03822>>			
3B	A 911 521 072 25	backrest cover leatherette/ backrest surface porsche lettering cloth	84-	2	
	LR1	black/black	84		
	LR2	brown/brown	84		
	LR3	grey-beige/grey-beige	84		
	PX2	black/black	85		
	PX4	brown/brown	85		
	QD9	grey-beige/grey-beige	85		
3B	A 911 521 072 25	backrest cover leatherette/ backrest surface pin stripe velour	84-	2	
	PL8	black/ black-red	84		(CH)

Pos	Part Number	Name	Remarks	Qty	Model
3C	A 911 521 072 57	backrest cover leatherette		2	
	DD2	beige	-6.82		
	DD4	brown F >>94DN4 03821			
	DD6	black F >>94DN4 03821			
	4FK	grey-beige F >>94DN4 03821			
	MC3	black F 94DN4 03822>>			
	MC4	brown F 94DN4 03822>>			
	MC5	grey-beige F 94DN4 03822>>			
3C	A 911 521 072 75	backrest cover leatherette/leather centre part not perforated		2	
	QE1	black/black F 94DN4 03822>>94EN4 02899			
	QE2	brown/brown F 94DN4 03822>>94EN4 02899			
	QE3	grey-beige/grey-beige F 94DN4 03822>>94EN4 02899			
3C	A 911 521 072 75	backrest cover leatherette/leather centre part perforated		2	
	JN3	black/black F 94EN4 02900>>			
	JN4	brown/brown F 94EN4 02900>>			
	JN5	grey-beige/grey-beige F 94EN4 02900>>			

- -- E N D -- -

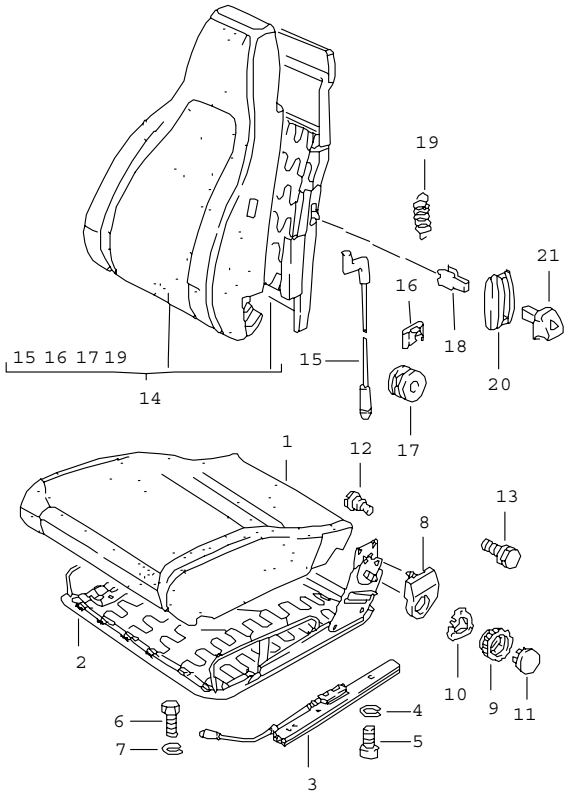

Pos	Part Number	Name	Remarks	Qty	Model
		front seat single parts			
1	911 521 385 01	foam part seat cushion	/L	1	
(1)	E 911 521 386 01	foam part seat cushion	/R	1	
2	911 521 069 56	seat frame	/L	1	
(2)	911 521 070 56	seat frame	/R	1	
3	A 477 881 211	seat rail with locking device	/L	1	
(3)	A 477 881 212	seat rail with locking device	/R	1	
(3)	A 944 521 491 00	seat rail		2	
(3)	944 521 491 00	seat rail inner see tpi GR.8 NR.34		2	
4	N 012 006 4	lock ring B 6		8	
5	900 067 009 02	pan-head screw M 6 X 15		8	
6	N 010 215 13	hexagon-head bolt M 6 X 15		8	
7	N 012 006 4	lock ring B 6		8	
8	911 521 359 02	cover	/L	1	
(8)	911 521 360 02	cover	/R	1	
9	E 911 521 381 00	shifting wheel for backrest adjustment		2	
10	911 521 571 00	tensioning spring		2	
11	911 521 383 00	cover		2	
12	911 521 371 00	screw inner		2	
13	911 521 547 00	hexagon-head bolt		4	
14	A 477 881 047	backrest	/L	1	
(14)	A 477 881 048	backrest	/R	1	

Pos	Part Number	Name	Remarks	Qty	Model
15	911 521 361 00	cable for release		2	
16	911 521 369 00	terminal for cable		2	
17	911 521 343 00	guide bush		2	
18	311 881 247	clamp		2	
19	311 881 287 A	spring		2	
20	311 881 607 A	rose		2	
21	113 881 633 E	knob		2	
	01C	black			
-	E 477 898 021	repair seat complete with seat rail without foam part without cover for seat and backrest surface	/L	1	
-	E 477 898 022	repair seat complete with seat rail without foam part without cover for seat and backrest surface	/R	1	
		- -- E N D -- -			

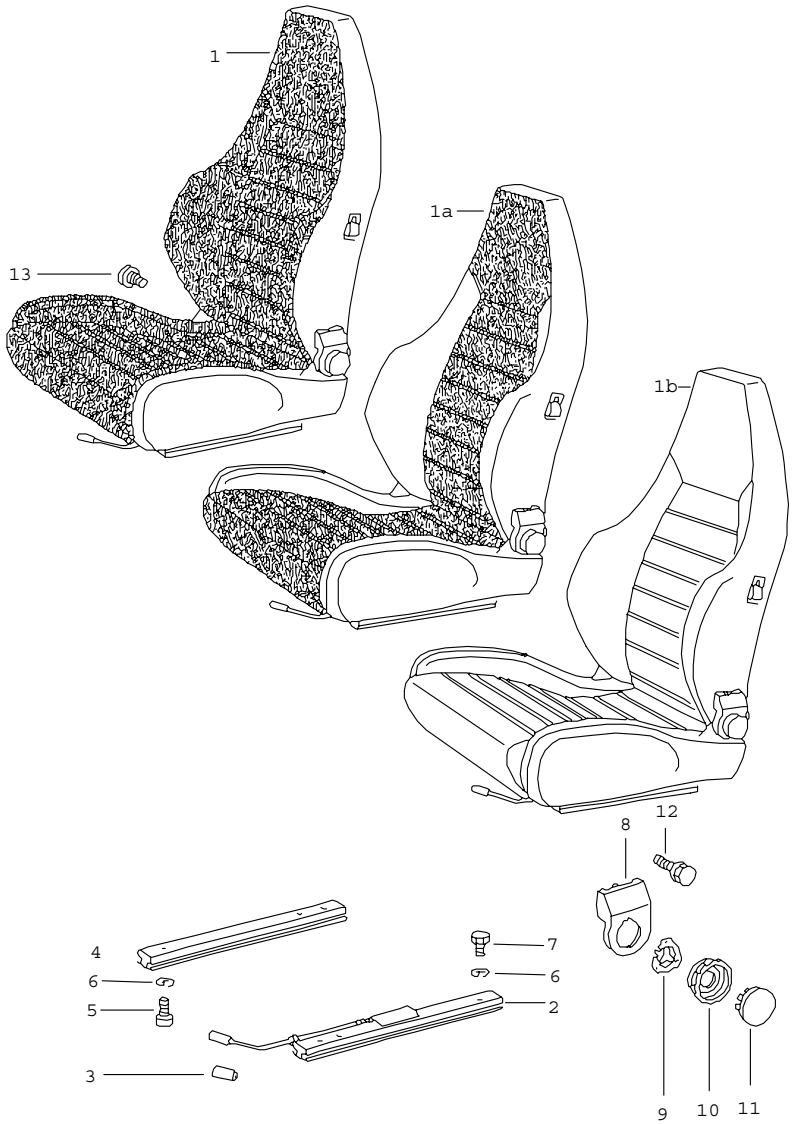

Pos	Part Number	Name	Remarks	Qty	Model
		sports seat complete			
1	A 911 521 007 06	sports seat leatherette/ seat and backrest surface berber cloth	/L	1	
	GE9	black/ grey/black F >>94DN4 03821			
	FE3	brown/ beige/brown F >>94DN4 03821			
	FE4	beige/ beige/brown	-6.82		
	JR8	grey-beige/ grey-beige-grey F >>94DN4 03821			
	JM3	black/ grey/black F 94DN4 03822>>			
	JM4	brown/ beige/brown F 94DN4 03822>>			
	JM9	grey-beige/ grey-beige-grey F 94DN4 03822>>			
1	A 911 521 007 07	sports seat leatherette/ seat and backrest surface berber cloth	/L	1	
	GE9	black/ grey/black F >>94DN4 03821			
	FE3	brown/ beige/brown F >>94DN4 03821			
	FE4	beige/ beige/brown	-6.82		
	JR8	grey-beige/ grey-beige-grey F >>94DN4 03821			
	JM3	black/ grey/black F 94DN4 03822>>			

Pos	Part Number	Name	Remarks	Qty	Model
	JM4	brown/ beige/brown F 94DN4 03822>>			
	JM9	grey-beige/ grey-beige-grey F 94DN4 03822>>			
(1)	A 911 521 008 06	sports seat leatherette/ seat and backrest surface berber cloth	/R	1	
	GE9	black/ grey/black F >>94DN4 03821			
	FE3	brown/ beige/brown F >>94DN4 03821			
	FE4	beige/ beige/brown	-6.82		
	JR8	grey-beige/ grey-beige-grey F >>94DN4 03821			
	JM3	black/ grey/black F 94DN4 03822>>			
	JM4	brown/ beige/brown F 94DN4 03822>>			
	JM9	grey-beige/ grey-beige-grey F 94DN4 03822>>			
(1)	A 911 521 008 07	sports seat leatherette/ seat and backrest surface berber cloth	/R	1	
	GE9	black/ grey/black F >>94DN4 03821			
	FE3	brown/ beige/brown F >>94DN4 03821			
	FE4	beige/ beige/brown	-6.82		
	JR8	grey-beige/ grey-beige-grey F >>94DN4 03821			
	JM3	black/ grey/black F 94DN4 03822>>			
	JM4	brown/ beige/brown F 94DN4 03822>>			
	JM9	grey-beige/ grey-beige-grey F 94DN4 03822>>			
1	A 911 521 007 06	sports seat leatherette/ seat and backrest surface porsche lettering cloth	/L	1	
	LR1	black/black	84		
	LR2	brown/brown	84		
	LR3	grey-beige/grey-beige	84		
	PX2	black/black	85		
	PX4	brown/brown	85		
	QD9	grey-beige/grey-beige	85		
1	A 911 521 007 07	sports seat leatherette/ seat and backrest surface porsche lettering cloth	/L	1	
	LR1	black/black	84		
	LR2	brown/brown	84		
	LR3	grey-beige/grey-beige	84		
	PX2	black/black	85		
	PX4	brown/brown	85		
	QD9	grey-beige/grey-beige	85		
(1)	A 911 521 008 06	sports seat leatherette/ seat and backrest surface porsche lettering cloth	/R	1	
	LR1	black/black	84		
	LR2	brown/brown	84		

Pos	Part Number	Name	Remarks	Qty	Model
	LR3	grey-beige/grey-beige	84		
	PX2	black/black	85		
	PX4	brown/brown	85		
	QD9	grey-beige/grey-beige	85		
(1)	A 911 521 008 07	sports seat leatherette/ seat and backrest surface porsche lettering cloth	/R	1	
	LR1	black/black	84		
	LR2	brown/brown	84		
	LR3	grey-beige/grey-beige	84		
	PX2	black/black	85		
	PX4	brown/brown	85		
	QD9	grey-beige/grey-beige	85		
1	A 911 521 007 06	sports seat leatherette/ seat and backrest surface pin stripe velour	/L	1	
	PL8	black/ black-red	84		(CH)
	QE5	black/ black-white	84		(F)
1	A 911 521 007 07	sports seat leatherette/ seat and backrest surface pin stripe velour	/L	1	
	PL8	black/ black-red	84		(CH)
	QE5	black/ black-white	84		(F)
(1)	A 911 521 008 06	sports seat leatherette/ seat and backrest surface pin stripe velour	/R	1	
	PL8	black/ black-red	84		(CH)
	QE5	black/ black-white	84		(F)

Pos	Part Number	Name	Remarks	Qty	Model
(1)	A 911 521 008 07	sports seat leatherette/ seat and backrest surface pin stripe velour	/R	1	
	PL8	black/ black-red	84		(CH)
	QE5	black/ black-white	84		(F)
1A	A 911 521 007 06	sports seat leatherette/ centre part head rest porsche lettering cloth	/L	1	
	LR6	black/black	84		
	LR7	brown/brown	84		
	LR8	grey-beige/grey-beige	84		
	PX1	black/black	85		
	PX3	brown/brown	85		
	QD8	grey-beige/grey-beige	85		
1A	A 911 521 007 07	sports seat leatherette/ centre part head rest porsche lettering cloth	/L	1	
	LR6	black/black	84		
	LR7	brown/brown	84		
	LR8	grey-beige/grey-beige	84		
	PX1	black/black	85		
	PX3	brown/brown	85		
	QD8	grey-beige/grey-beige	85		
(1A)	A 911 521 008 06	sports seat leatherette/ centre part head rest porsche lettering cloth	/R	1	
	LR6	black/black	84		
	LR7	brown/brown	84		
	LR8	grey-beige/grey-beige	84		

Pos	Part Number	Name	Remarks	Qty	Model
	PX1	black/black	85		
	PX3	brown/brown	85		
	QD8	grey-beige/grey-beige	85		
(1A)	A 911 521 008 07	sports seat leatherette/ centre part head rest porsche lettering cloth	/R	1	
	LR6	black/black	84		
	LR7	brown/brown	84		
	LR8	grey-beige/grey-beige	84		
	PX1	black/black	85		
	PX3	brown/brown	85		
	QD8	grey-beige/grey-beige	85		
1B	A 911 521 007 61	sports seat leather	/L	1	
	1AJ	black F >>94DN4 03821			
	2NF	beige	-6.82		
	3NG	brown F >>94DN4 03821			
	6FL	grey-beige F >>94DN4 03821			
	KZ2	black F 94DN4 03822>>			
	KZ5	brown F 94DN4 03822>>			
	KZ4	grey-beige F 94DN4 03822>>			
1B	A 911 521 007 64	sports seat leather	/L	1	
	1AJ	black F >>94DN4 03821			
	2NF	beige	-6.82		
	3NG	brown F >>94DN4 03821			
	6FL	grey-beige F >>94DN4 03821			
	KZ2	black F 94DN4 03822>>			
	KZ5	brown F 94DN4 03822>>			
	KZ4	grey-beige F 94DN4 03822>>			
(1B)	A 911 521 008 61	sports seat leather	/R	1	
	1AJ	black F >>94DN4 03821			
	2NF	beige	-6.82		
	3NG	brown F >>94DN4 03821			
	6FL	grey-beige F >>94DN4 03821			
	KZ2	black F 94DN4 03822>>			
	KZ5	brown F 94DN4 03822>>			
	KZ4	grey-beige F 94DN4 03822>>			
(1B)	A 911 521 008 64	sports seat leather	/R	1	
	1AJ	black F >>94DN4 03821			
	2NF	beige	-6.82		
	3NG	brown F >>94DN4 03821			
	6FL	grey-beige F >>94DN4 03821			
	KZ2	black F 94DN4 03822>>			
	KZ5	brown F 94DN4 03822>>			
	KZ4	grey-beige F 94DN4 03822>>			

Pos	Part Number	Name	Remarks	Qty	Model
2	A 928 521 489 02	seat rail with locking device	/L	1	
(2)	A 928 521 490 02	seat rail with locking device	/R	1	
(3)	911 521 533 01	handle f.longitudinal adjustment		2	
	01C	satin black			
4	A 944 521 491 00	seat rail		2	
4	944 521 491 00	seat rail without locking device see tpi GR.8 NR.34		2	
5	N 014 761 2	pan-head screw M 6 X 12		8	
6	N 012 006 4	lock ring B 6		16	
7	N 010 215 13	hexagon-head bolt M 6 X 15		8	
8	911 521 359 02	cover	/L	1	
(8)	911 521 360 02	cover	/R	1	
9	911 521 571 00	tensioning spring		2	
10	E 911 521 381 00	shifting wheel		2	
11	911 521 383 00	cover		2	
12	911 521 371 00	screw inner		2	
13	911 521 547 00	hexagon-head bolt		4	
		- -- E N D -- -			

Pos	Part Number	Name	Remarks	Qty	Model

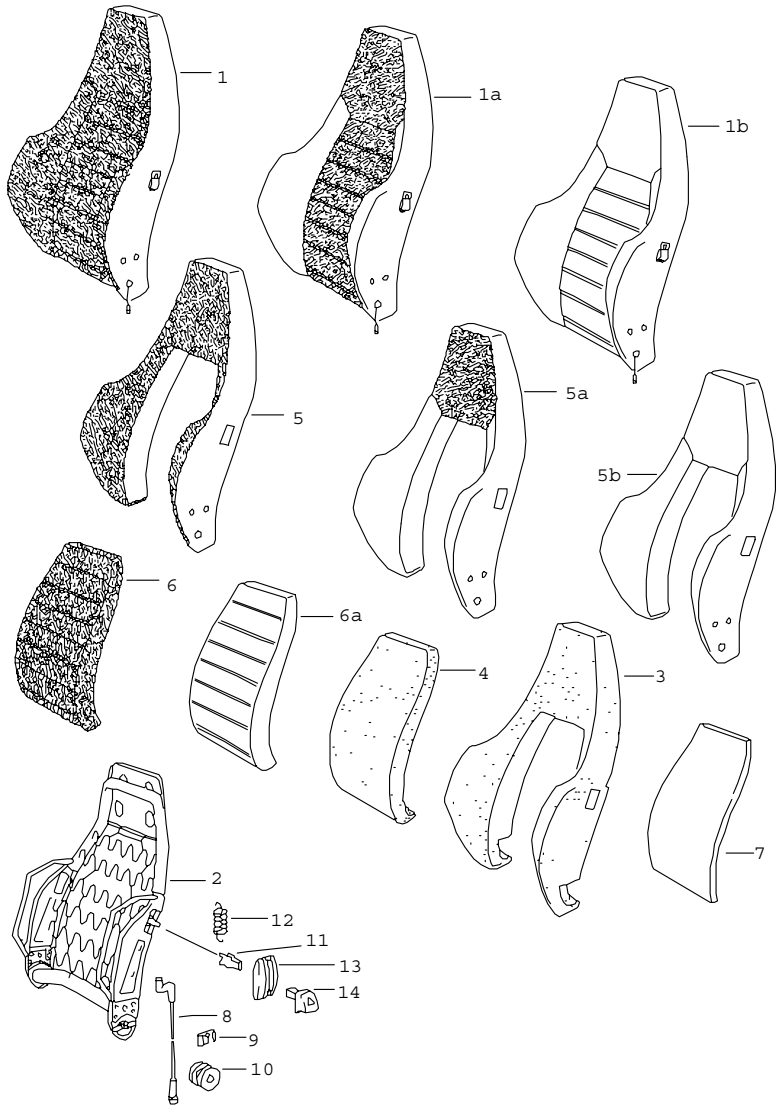

Pos	Part Number	Name	Remarks	Qty	Model
		sports seat backrest single parts			
1	A 911 521 603 07	backrest complete leatherette/ backrest surface berber cloth	/L	1	
	GE9	black/ grey/black F >>94DN4 03821			
	FE3	brown/ beige/brown F >>94DN4 03821			
	FE4	beige/ beige/brown	-6.82		
	JR8	grey-beige/ grey-beige-grey F >>94DN4 03821			
	JM3	black/ grey/black F 94DN4 03822>>			
	JM4	brown/ beige/brown F 94DN4 03822>>			
	JM9	grey-beige/ grey-beige-grey F 94DN4 03822>>			
(1)	A 911 521 604 07	backrest complete leatherette/ backrest surface berber cloth	/R	1	
	GE9	black/ grey/black F >>94DN4 03821			
	FE3	brown/ beige/brown F >>94DN4 03821			
	FE4	beige/ beige/brown	-6.82		
	JR8	grey-beige/ grey-beige-grey F >>94DN4 03821			

Pos	Part Number	Name	Remarks	Qty	Model
	JM3	black/ grey/black F 94DN4 03822>>			
	JM4	brown/ beige/brown F 94DN4 03822>>			
	JM9	grey-beige/ grey-beige-grey F 94DN4 03822>>			
1	A 911 521 603 07	backrest complete leatherette/ backrest surface porsche lettering cloth	/L	1	
	LR1	black/black	84		
	LR2	brown/brown	84		
	LR3	grey-beige/grey-beige	84		
	PX2	black/black	85		
	PX4	brown/brown	85		
	QD9	grey-beige/grey-beige	85		
(1)	A 911 521 604 07	backrest complete leatherette/ backrest surface porsche lettering cloth	/R	1	
	LR1	black/black	84		
	LR2	brown/brown	84		
	LR3	grey-beige/grey-beige	84		
	PX2	black/black	85		
	PX4	brown/brown	85		
	QD9	grey-beige/grey-beige	85		
1	A 911 521 603 07	backrest complete leatherette/ backrest surface pin stripe velour	/L	1	
	PL8	black/ black-red	84		(CH)
	QE5	black/ black-white	84		(F)
(1)	A 911 521 604 07	backrest complete leatherette/ backrest surface pin stripe velour	/R	1	
	PL8	black/ black-red	84		(CH)
	QE5	black/ black-white	84		(F)
1A	A 911 521 603 06	backrest complete leatherette/ centre part head rest porsche lettering cloth	/L	1	
	LR6	black/black	84		
	LR7	brown/brown	84		
	LR8	grey-beige/grey-beige	84		
	PX1	black/black	85		
	PX3	brown/brown	85		
	QD8	grey-beige/grey-beige	85		
1A	A 911 521 603 07	backrest complete leatherette/ centre part head rest porsche lettering cloth	/L	1	
	LR6	black/black	84		
	LR7	brown/brown	84		
	LR8	grey-beige/grey-beige	84		
	PX1	black/black	85		
	PX3	brown/brown	85		
	QD8	grey-beige/grey-beige	85		

Pos	Part Number	Name	Remarks	Qty	Model
(1A)	A 911 521 604 06	backrest complete leatherette/ centre part head rest porsche lettering cloth	/R	1	
	LR6	black/black	84		
	LR7	brown/brown	84		
	LR8	grey-beige/grey-beige	84		
	PX1	black/black	85		
	PX3	brown/brown	85		
	QD8	grey-beige/grey-beige	85		
(1A)	A 911 521 604 07	backrest complete leatherette/ centre part head rest porsche lettering cloth	/R	1	
	LR6	black/black	84		
	LR7	brown/brown	84		
	LR8	grey-beige/grey-beige	84		
	PX1	black/black	85		
	PX3	brown/brown	85		
	QD8	grey-beige/grey-beige	85		
1B	A 911 521 603 50	backrest complete leather	/L	1	
	1AJ	black F >>94DN4 03821			
	2NF	beige	-6.82		
	3NG	brown F >>94DN4 03821			
	6FL	grey-beige F >>94DN4 03821			
	KZ2	black F 94DN4 03822>>			
	KZ5	brown F 94DN4 03822>>			
	KZ4	grey-beige F 94DN4 03822>>			
1B	A 911 521 603 53	backrest complete leather	/L	1	
	1AJ	black F >>94DN4 03821			
	2NF	beige	-6.82		
	3NG	brown F >>94DN4 03821			
	6FL	grey-beige F >>94DN4 03821			
	KZ2	black F 94DN4 03822>>			
	KZ5	brown F 94DN4 03822>>			
	KZ4	grey-beige F 94DN4 03822>>			
(1B)	A 911 521 604 50	backrest complete leather	/R	1	
	1AJ	black F >>94DN4 03821			
	2NF	beige	-6.82		
	3NG	brown F >>94DN4 03821			
	6FL	grey-beige F >>94DN4 03821			
	KZ2	black F 94DN4 03822>>			
	KZ5	brown F 94DN4 03822>>			
	KZ4	grey-beige F 94DN4 03822>>			
(1B)	A 911 521 604 53	backrest complete leather	/R	1	
	1AJ	black F >>94DN4 03821			

Pos	Part Number	Name	Remarks	Qty	Model
	2NF	beige	-6.82		
	3NG	brown F >>94DN4 03821			
	6FL	grey-beige F >>94DN4 03821			
	KZ2	black F 94DN4 03822>>			
	KZ5	brown F 94DN4 03822>>			
	KZ4	grey-beige F 94DN4 03822>>			
2	911 521 613 02	backrest frame	/L	1	
(2)	911 521 614 02	backrest frame	/R	1	
3	911 521 751 02	foam part backrest side part		2	
4	E 911 521 104 02	foam part backrest cushion		2	
5	A 911 521 072 06	backrest side part cover leatherette/ backrest surface berber cloth		2	
	GE9	black/ grey/black F >>94DN4 03821			
	FE3	brown/ beige/brown F >>94DN4 03821			
	FE4	beige/ beige/brown	-6.82		
	JR8	grey-beige/ grey-beige-grey F >>94DN4 03821			
	JM3	black grey/black F 94DN4 03822>>			
	JM4	brown/ beige/brown F 94DN4 03822>>			
	JM9	grey-beige/ grey-beige-grey F 94DN4 03822>>			
5	A 911 521 072 06	backrest side part cover leatherette/ backrest surface porsche lettering cloth		2	
	LR1	black/black	84		
	LR2	brown/brown	84		
	LR3	grey-beige/grey-beige	84		
	PX2	black/black	85		
	PX4	brown/brown	85		
	QD9	grey-beige/grey-beige	85		
5	A 911 521 072 06	backrest side part cover leatherette/ backrest surface pin stripe velour		2	
	PL8	black/ black-red	84		(CH)
	QE5	black/ black-white	84		(F)
5A	A 911 521 072 06	backrest side part cover leatherette/ head rest porsche lettering cloth		2	
	LR6	black/black	84		
	LR7	brown/brown	84		
	LR8	grey-beige/grey-beige	84		
	PX1	black/black	85		
	PX3	brown/brown	85		
	QD8	grey-beige/grey-beige	85		
5B	A 911 521 072 70	backrest side part cover leather		2	
	1AJ	black F >>94DN4 03821			
	2NF	beige	-6.82		
	3NG	brown F >>94DN4 03821			
	6FL	grey-beige F >>94DN4 03821			

Pos	Part Number	Name	Remarks	Qty	Model
	KZ2	black F 94DN4 03822>>			
	KZ5	brown F 94DN4 03822>>			
	KZ4	grey-beige F 94DN4 03822>>			
6	A 911 521 403 06	backrest cushion cover backrest surface berber cloth		2	
	1GB	grey/black			
	8NB	beige/brown			
	1FB	grey-beige-grey	83-		
6	A 911 521 403 06	backrest cushion cover backrest surface porsche lettering cloth		2	
	4CR	black	84		
	6TR	brown	84		
	8RR	grey-beige	84		
	2CZ	black/black	85		
	7NZ	brown/brown	85		
	5UY	grey-beige	85		
6	A 911 521 403 06	backrest cushion cover backrest surface pin stripe velour		2	
	2LN	black-red	84		(CH)
	7BN	black-white	84		(F)
6A	A 911 521 403 50	backrest cushion cover leather		2	
	1AJ	black F >>94DN4 03821			
	2NF	beige	-6.82		
	3NG	brown F >>94DN4 03821			
	6FL	grey-beige F >>94DN4 03821			

Pos	Part Number	Name	Remarks	Qty	Model
	KZ2	black F 94DN4 03822>>			
	KZ5	brown F 94DN4 03822>>			
	KZ4	grey-beige F 94DN4 03822>>			
7	E 911 521 575 00	cover		2	
8	911 521 361 00	cable for release		2	
9	911 521 369 00	terminal for cable		2	
10	911 521 343 00	guide bush		2	
11	311 881 247	clamp		2	
12	311 881 287 A	spring		2	
13	911 521 815 00	rose		2	
	01C	satin black			
14	911 521 817 00	control button		2	
	01C	satin black			
		- -- E N D -- -			

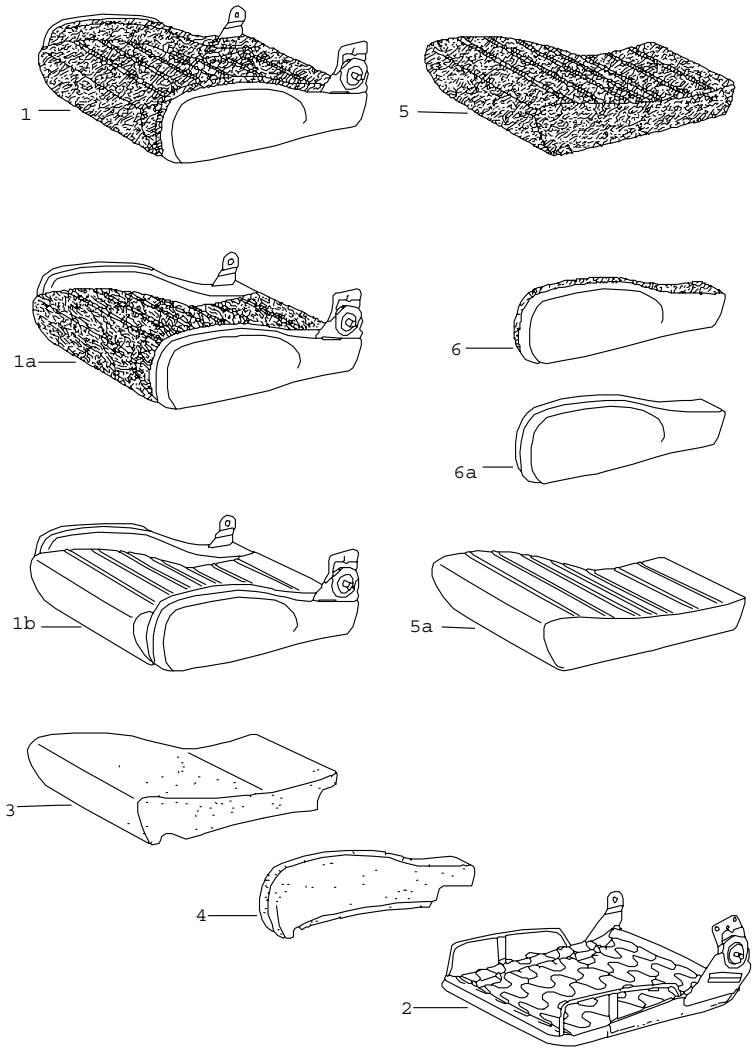

Pos	Part Number	Name	Remarks	Qty	Model
		sports seat seat cushion single parts			
1	A 911 521 605 06	seat cushion complete leatherette/ seat surface berber cloth	/L	1	
	GE9	black/ grey/black F >>94DN4 03821			
	FE3	brown/ beige/brown F >>94DN4 03821			
	FE4	beige/ beige/brown	-6.82		
	JR8	grey-beige/ grey-beige-grey F >>94DN4 03821			
	JM3	black/ grey/black F 94DN4 03822>>			
	JM4	brown/ beige/brown F 94DN4 03822>>			
	JM9	grey-beige/ grey-beige-grey F 94DN4 03822>>			
(1)	A 911 521 606 06	seat cushion complete leatherette/ seat surface berber cloth	/R	1	
	GE9	black/ grey/black F >>94DN4 03821			
	FE3	brown/ beige/brown F >>94DN4 03821			
	FE4	beige/ beige/brown	-6.82		
	JR8	grey-beige/ grey-beige-grey F >>94DN4 03821			

Pos	Part Number	Name	Remarks	Qty	Model
	JM3	black/ grey/black F 94DN4 03822>>			
	JM4	brown/ beige/brown F 94DN4 03822>>			
	JM9	grey-beige/ grey-beige-grey F 94DN4 03822>>			
1	A 911 521 605 06	seat cushion complete leatherette/ seat surface porsche lettering cloth	/L	1	
	LR1	black/black	84		
	LR2	brown/brown	84		
	LR3	grey-beige/grey-beige	84		
	PX2	black/black	85		
	PX4	brown/brown	85		
	QD9	grey-beige/grey-beige	85		
(1)	A 911 521 606 06	seat cushion complete leatherette/ seat surface porsche lettering cloth	/R	1	
	LR1	black/black	84		
	LR2	brown/brown	84		
	LR3	grey-beige/grey-beige	84		
	PX2	black/black	85		
	PX4	brown/brown	85		
	QD9	grey-beige/grey-beige	85		
1	A 911 521 605 06	seat cushion complete leatherette/ seat surface pin stripe velour	/L	1	
	PL8	black/ black-red	84		(CH)

Pos	Part Number	Name	Remarks	Qty	Model
	QE5	black/ black-white	84		(F)
(1)	A 911 521 606 06	seat cushion complete leatherette/ seat surface pin stripe velour	/R	1	
	PL8	black/ black-red	84		(CH)
	QE5	black/ black-white	84		(F)
1A	A 911 521 605 06	seat cushion complete leatherette/ centre part porsche lettering cloth	/L	1	
	LR6	black/black	84		
	LR7	brown/brown	84		
	LR8	grey-beige/grey-beige	84		
	PX1	black/black	85		
	PX3	brown/brown	85		
	QD8	grey-beige/grey-beige	85		
(1A)	A 911 521 606 06	seat cushion complete leatherette/ centre part porsche lettering cloth	/R	1	
	LR6	black/black	84		
	LR7	brown/brown	84		
	LR8	grey-beige/grey-beige	84		
	PX1	black/black	85		
	PX3	brown/brown	85		
	QD8	grey-beige/grey-beige	85		
1B	A 911 521 605 50	seat cushion complete leather	/L	1	
	1AJ	black F >>94DN4 03821			

Pos	Part Number	Name	Remarks	Qty	Model
	2NF	beige	-6.82		
	3NG	brown F >>94DN4 03821			
	6FL	grey-beige F >>94DN4 03821			
	KZ2	black F 94DN4 03822>>			
	KZ5	brown F 94DN4 03822>>			
	KZ4	grey-beige F 94DN4 03822>>			
(1B)	A 911 521 606 50	seat cushion complete leather	/R	1	
	1AJ	black F >>94DN4 03821			
	2NF	beige	-6.82		
	3NG	brown F >>94DN4 03821			
	6FL	grey-beige F >>94DN4 03821			
	KZ2	black F 94DN4 03822>>			
	KZ5	brown F 94DN4 03822>>			
	KZ4	grey-beige F 94DN4 03822>>			
2	A 911 521 621 01	seat frame	/L	1	
(2)	E 911 521 622 01	seat frame	/R	1	
3	E 911 521 697 02	foam part seat cushion		2	
4	911 521 683 02	foam part cushion left seat	/L	1	
(4)	911 521 654 02	foam part cushion left seat	/R	1	
(4)	911 521 653 02	foam part cushion right seat	/L	1	
(4)	E 911 521 684 02	foam part cushion right seat	/R	1	
5	A 911 521 439 06	cover for cushion seat surface berber cloth		2	
	1GB	grey/black			
	8NB	beige/brown			
	1FB	grey-beige-grey			
5	A 911 521 439 06	cover for cushion seat surface porsche lettering cloth		2	
	4CR	black	84		
	6TR	brown	84		
	8RR	grey-beige	84		
	2CZ	black	85		
	7NZ	brown	85		
	5UY	grey-beige	85		
5	A 911 521 439 06	cover for cushion seat surface pin stripe velour		2	
	2LN	black-red	84		(CH)
	7BN	black-white	84		(F)
5A	A 911 521 439 50	cover for cushion leather		2	
	1AJ	black F >>94DN4 03821			
	2NF	beige	-6.82		
	3NG	brown F >>94DN4 03821			
	6FL	grey-beige F >>94DN4 03821			
	KZ2	black F 94DN4 03822>>			

Pos	Part Number	Name	Remarks	Qty	Model
	KZ5	brown F 94DN4 03822>>			
	KZ4	grey-beige F 94DN4 03822>>			
6	A 911 521 631 06	seat side part cover left seat leatherette/ seat surface berber cloth	/L	1	
	GE9	black/ grey/black F >>94DN4 03821			
	FE3	brown/ beige/brown F >>94DN4 03821			
	FE4	beige/ beige/brown	-6.82		
	JR8	grey-beige/ grey-beige-grey F >>94DN4 03821			
	JM3	black/ grey/black F 94DN4 03822>>			
	JM4	brown/ beige/brown F 94DN4 03822>>			
	JM9	grey-beige/ grey-beige-grey F 94DN4 03822>>			
(6)	A 911 521 632 06	seat side part cover left seat leatherette/ seat surface berber cloth	/R	1	
	GE9	black/ grey/black F >>94DN4 03821			
	FE3	brown/ beige/brown F >>94DN4 03821			
	FE4	beige/ beige/brown	-6.82		
	JR8	grey-beige/ grey-beige-grey F >>94DN4 03821			
	JM3	black/ grey/black F 94DN4 03822>>			
	JM4	brown/ beige/brown F 94DN4 03822>>			
	JM9	grey-beige/ grey-beige-grey F 94DN4 03822>>			
(6)	A 911 521 633 06	seat side part cover right seat leatherette/ seat surface berber cloth	/L	1	
	GE9	black/ grey/black F >>94DN4 03821			
	FE3	brown/ beige/brown F >>94DN4 03821			
	FE4	beige/ beige/brown	-6.82		
	JR8	grey-beige/ grey-beige-grey F >>94DN4 03821			
	JM3	black/ grey/black F 94DN4 03822>>			
	JM4	brown/ beige/brown F 94DN4 03822>>			
	JM9	grey-beige/ grey-beige-grey F 94DN4 03822>>			
(6)	A 911 521 634 06	seat side part cover right seat leatherette/ seat surface berber cloth	/R	1	
	GE9	black/ grey/black F >>94DN4 03821			

Pos	Part Number	Name	Remarks	Qty	Model
	FE3	brown/ beige/brown F >>94DN4 03821			
	FE4	beige/ beige/brown	-6.82		
	JR8	grey-beige/ grey-beige-grey F >>94DN4 03821			
	JM3	black/ grey/black F 94DN4 03822>>			
	JM4	brown/ beige/brown F 94DN4 03822>>			
	JM9	grey-beige/ grey-beige-grey F 94DN4 03822>>			
6	A 911 521 631 06	seat side part cover left seat leatherette/ seat surface porsche lettering cloth	/L	1	
	LR1	black/black	84		
	LR2	brown/brown	84		
	LR3	grey-beige/grey-beige	84		
	PX2	black/black	85		
	PX4	brown/brown	85		
	QD9	grey-beige/grey-beige	85		
(6)	A 911 521 632 06	seat side part cover left seat leatherette/ seat surface porsche lettering cloth	/R	1	
	LR1	black/black	84		
	LR2	brown/brown	84		
	LR3	grey-beige/grey-beige	84		
	PX2	black/black	85		
	PX4	brown/brown	85		
	QD9	grey-beige/grey-beige	85		
(6)	A 911 521 633 06	seat side part cover right seat leatherette/ seat surface porsche lettering cloth	/L	1	
	LR1	black/black	84		
	LR2	brown/brown	84		
	LR3	grey-beige/grey-beige	84		
	PX2	black/black	85		
	PX4	brown/brown	85		
	QD9	grey-beige/grey-beige	85		
(6)	A 911 521 634 06	seat side part cover right seat leatherette/ seat surface porsche lettering cloth	/R	1	
	LR1	black/black	84		
	LR2	brown/brown	84		
	LR3	grey-beige/grey-beige	84		
	PX2	black/black	85		
	PX4	brown/brown	85		
	QD9	grey-beige/grey-beige	85		
6	A 911 521 631 06	seat side part cover left seat leatherette/ seat surface pin stripe velour	/L	1	
	PL8	black/ black-red	84		(CH)
	QE5	black/ black-white	84		(F)
(6)	A 911 521 632 06	seat side part cover left seat leatherette/ seat surface pin stripe velour	/R	1	
	PL8	black/ black-red	84		(CH)

Pos	Part Number	Name	Remarks	Qty	Model
	QE5	black/ black-white	84		(F)
(6)	A 911 521 633 06	seat side part cover right seat leatherette/ seat surface pin stripe velour	/L	1	
	PL8	black/ black-red	84		(CH)
	QE5	black/ black-white	84		(F)
(6)	A 911 521 634 06	seat side part cover right seat leatherette/ seat surface pin stripe velour	/R	1	
	PL8	black/ black-red	84		(CH)
	QE5	black/ black-white	84		(F)
6A	A 911 521 631 06	seat side part cover left seat leatherette	/L	1	
	LR6	black	84		
	LR7	brown	84		
	LR8	grey-beige	84		
	PX1	black	85		
	PX3	brown	85		
	QD8	grey-beige	85		
(6A)	A 911 521 632 06	seat side part cover left seat leatherette	/R	1	
	LR6	black	84		
	LR7	brown	84		
	LR8	grey-beige	84		
	PX1	black	85		
	PX3	brown	85		
	QD8	grey-beige	85		
(6A)	A 911 521 633 06	seat side part cover right seat leatherette	/L	1	
	LR6	black	84		
	LR7	brown	84		
	LR8	grey-beige	84		
	PX1	black	85		
	PX3	brown	85		
	QD8	grey-beige	85		
(6A)	A 911 521 634 06	seat side part cover right seat leatherette	/R	1	
	LR6	black	84		
	LR7	brown	84		
	LR8	grey-beige	84		
	PX1	black	85		
	PX3	brown	85		
	QD8	grey-beige	85		
6A	A 911 521 631 50	seat side part cover left seat leather	/L	1	
	1AJ	black F >>94DN4 03821			
	2NF	beige	-6.82		
	3NG	brown F >>94DN4 03821			
	6FL	grey-beige F >>94DN4 03821			
	KZ2	black F 94DN4 03822>>			
	KZ5	brown F 94DN4 03822>>			
	KZ4	grey-beige F 94DN4 03822>>			

Pos	Part Number	Name	Remarks	Qty	Model
(6A)	A 911 521 632 50	seat side part cover left seat leather	/R	1	
	1AJ	black F >>94DN4 03821			
	2NF	beige	-6.82		
	3NG	brown F >>94DN4 03821			
	6FL	grey-beige F >>94DN4 03821			
	KZ2	black F 94DN4 03822>>			
	KZ5	brown F 94DN4 03822>>			
	KZ4	grey-beige F 94DN4 03822>>			
(6A)	A 911 521 633 50	seat side part cover right seat leather	/L	1	
	1AJ	black F >>94DN4 03821			
	2NF	beige	-6.82		
	3NG	brown F >>94DN4 03821			
	6FL	grey-beige F >>94DN4 03821			
	KZ2	black F 94DN4 03822>>			
	KZ5	brown F 94DN4 03822>>			
	KZ4	grey-beige F 94DN4 03822>>			
(6A)	A 911 521 634 50	seat side part cover right seat leather	/R	1	
	1AJ	black F >>94DN4 03821			
	2NF	beige	-6.82		
	3NG	brown F >>94DN4 03821			
	6FL	grey-beige F >>94DN4 03821			
	KZ2	black F 94DN4 03822>>			
	KZ5	brown F 94DN4 03822>>			
	KZ4	grey-beige F 94DN4 03822>>			

- -- E N D -- -

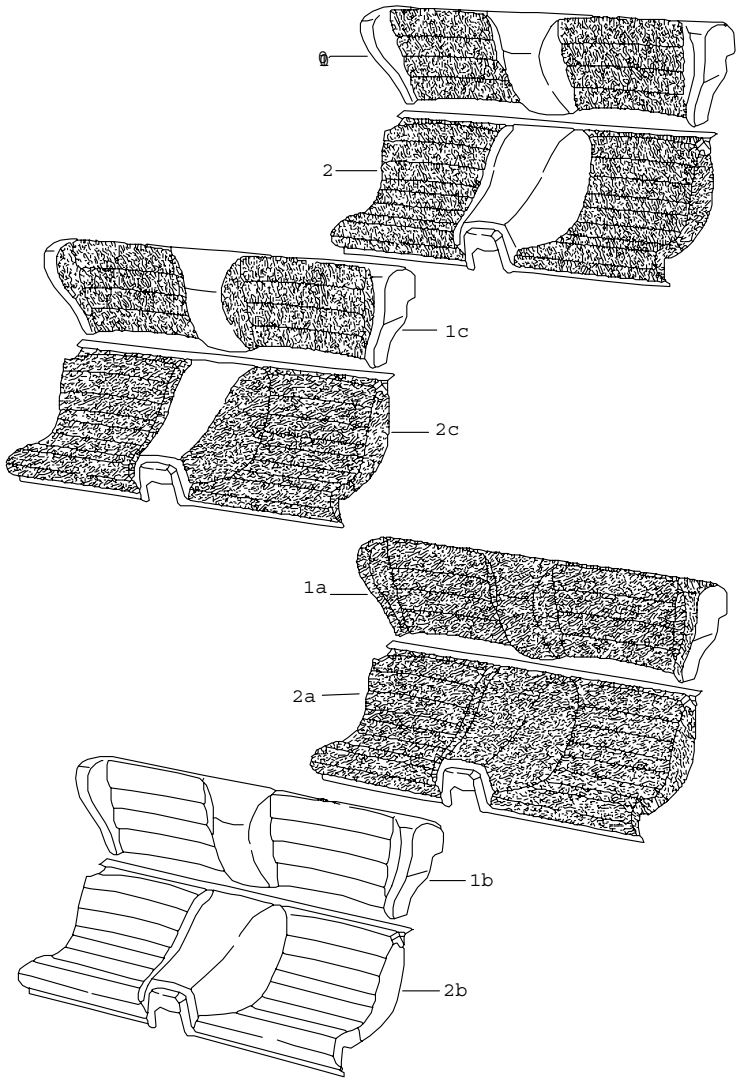

Pos	Part Number	Name	Remarks	Qty	Model
		back seat complete			
		single parts see group 8/08/25			
1	477 885 045 C	backrest leatherette/ centre part pin stripe velour		1	
	FD5	black/ black-white F >>94DN4 03821			
	FD6	brown/ brown-beige F >>94DN4 03821			
	FD7	beige/ brown-beige	-6.82		
	JR7	grey-beige/ grey-beige-white F >>94DN4 03821			
	JN1	black/ black-white F 94DN4 03822>>			
	JN2	brown/ brown-beige F 94DN4 03822>>			
	LD4	grey-beige/ grey-beige-white F 94DN4 03822>>			
1	477 885 045 C	backrest leatherette/ centre part checker board velour		1	
	FD8	black/ grey/black	-6.82		
	FD9	brown/ beige/brown	-6.82		
	FE1	beige/ beige/brown	-6.82		
	JR4	black/ light grey-black F >>94DN4 03821			

Pos	Part Number	Name	Remarks	Qty	Model
	JR5	brown/ brown-grey F >>94DN4 03821			
	JR6	grey-beige/ brown-grey F >>94DN4 03821			
	LD5	black/ light grey-black F 94DN4 03822>>			
	LD6	brown/ brown-grey F 94DN4 03822>>			
	LD7	grey-beige/ brown-grey F 94DN4 03822>>			
1A	477 885 045 C	backrest leatherette/ backrest surface berber cloth		1	
	GE9	black/ grey/black			
	FE3	brown/ beige/brown			
	FE4	beige/ beige/brown			
	JR8	grey-beige/ grey-beige-grey			
1B	477 885 045 C	backrest leatherette		1	
	DD2	beige	-6.82		
	DD4	brown F >>94DN4 03821			
	DD6	black F >>94DN4 03821			
	4FK	grey-beige F >>94DN4 03821			
	JN3	black F 94DN4 03822>>			
	JN4	brown F 94DN4 03822>>			
	JN5	grey-beige F 94DN4 03822>>			
1	944 522 045 00	backrest leatherette/ centre part pin stripe velour	84-	1	
	JN1	black/ black-white			
	JN2	brown/ brown-beige			
	LD4	grey-beige/ grey-beige-white			
1	944 522 045 00	backrest leatherette/ centre part checker board velour	84-	1	
	LD5	black/ light grey-black			
	LD6	brown/ brown-grey			
	LD7	grey-beige/ brown-grey			
1	944 522 045 00	backrest leatherette/ centre part porsche lettering cloth	84-	1	
	LR6	black/black	84		
	LR7	brown/brown	84		
	LR8	grey-beige/grey-beige	84		
	PX1	black/black	85		
	PX3	brown/brown	85		
	QD8	grey-beige/grey-beige	85		
1A	944 522 045 00	backrest leatherette/ backrest surface porsche lettering cloth	84-	1	
	LR1	black/black	84		
	LR2	brown/brown	84		
	LR3	grey-beige/grey-beige	84		

Pos	Part Number	Name	Remarks	Qty	Model
	PX2	black/black	85		
	PX4	brown/brown	85		
	QD9	grey-beige/grey-beige	85		
1A	944 522 045 00	backrest leatherette/ backrest surface pin stripe velour	84-	1	
	QE5	black/ black-white	84		(F)
1B	944 522 045 00	backrest leatherette	84-	1	
	JN3	black			
	JN4	brown			
	JN5	grey-beige			
1C	944 522 045 00	backrest leatherette/ centre part pin stripe velour	84-	1	
	PL8	black/ black-red	84		(CH)
2	477 885 871 B	seat cushion leatherette/ centre part pin stripe velour		1	
	FD5	black/ black-white F >>94DN4 03821			
	FD6	brown/ brown-beige F >>94DN4 03821			
	FD7	beige/ brown-beige	-6.82		
	JR7	grey-beige/ grey-beige-white F >>94DN4 03821			
	JN1	black/ black-white F 94DN4 03822>>			
	JN2	brown/ brown-beige F 94DN4 03822>>			
	LD4	grey-beige/ grey-beige-white F 94DN4 03822>>			
2	477 885 871 B	seat cushion leatherette/ centre part checker board velour		1	
	FD8	black/ grey/black	-6.82		
	FD9	brown/ beige/brown	-6.82		
	FE1	beige/ beige/brown	-6.82		
	JR4	black/ light grey-black F >>94DN4 03821			
	JR5	brown/ brown-grey F >>94DN4 03821			
	JR6	grey-beige/ brown-grey F >>94DN4 03821			
	LD5	black/ light grey-black F 94DN4 03822>>			
	LD6	brown/ brown-grey F 94DN4 03822>>			
	LD7	grey-beige/ brown-grey F 94DN4 03822>>			
2	477 885 871 B	seat cushion leatherette/ centre part porsche lettering cloth		1	
	LR6	black	84		
	LR7	brown	84		
	LR8	grey-beige	84		
	PX1	black/black	85		
	PX3	brown/brown	85		
	QD8	grey-beige/grey-beige	85		

Pos	Part Number	Name	Remarks	Qty	Model
2A	477 885 871 B	seat cushion leatherette/ seat surface berber cloth		1	
	GE9	black/ grey/black			
	FE3	brown/ beige/brown			
	FE4	beige/ beige/brown			
	JR8	grey-beige/ grey-beige-grey			
2A	477 885 871 B	seat cushion leatherette/ seat surface porsche lettering cloth		1	
	LR1	black/black	84		
	LR2	brown/brown	84		
	LR3	grey-beige/grey-beige	84		
	PX2	black/black	85		
	PX4	brown/brown	85		
	QD9	grey-beige/grey-beige	85		
2A	477 885 871 B	seat cushion leatherette/ seat surface pin stripe velour		1	
	QE5	black/ black-white	84		(F)
2B	477 885 871 B	seat cushion leatherette		1	
	DD2	beige	-6.82		
	DD4	brown F >>94DN4 03821			
	DD6	black F >>94DN4 03821			
	4FK	grey-beige F >>94DN4 03821			
	JN3	black F 94DN4 03822>>			
	JN4	brown F 94DN4 03822>>			
	JN5	grey-beige F 94DN4 03822>>			
2C	477 885 871 B	seat cushion leatherette/ centre part pin stripe velour		1	
	PL8	black/ black-red	84		(CH)

- -- E N D -- -

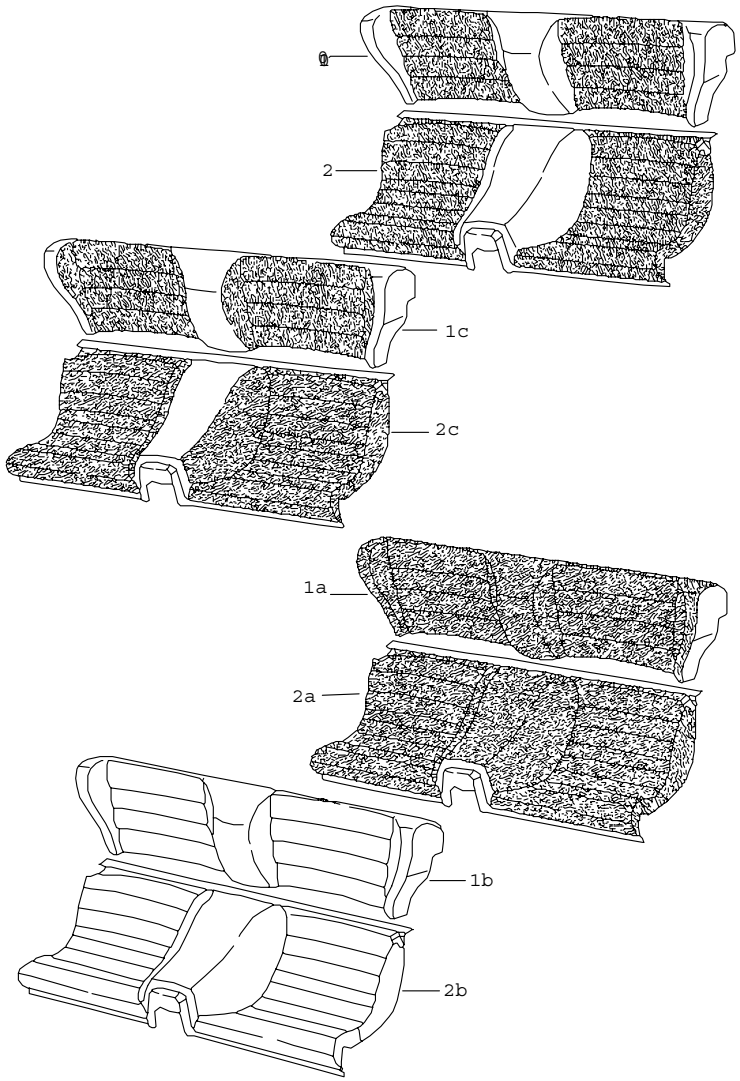

Pos	Part Number	Name	Remarks	Qty	Model
		back seat complete			
		single parts see group 8/08/25			
1	477 885 045 C	backrest leatherette/ centre part pin stripe velour		1	
	FD5	black/ black-white F >>94DN4 03821			
	FD6	brown/ brown-beige F >>94DN4 03821			
	FD7	beige/ brown-beige	-6.82		
	JR7	grey-beige/ grey-beige-white F >>94DN4 03821			
	JN1	black/ black-white F 94DN4 03822>>			
	JN2	brown/ brown-beige F 94DN4 03822>>			
	LD4	grey-beige/ grey-beige-white F 94DN4 03822>>			
1	477 885 045 C	backrest leatherette/ centre part checker board velour		1	
	FD8	black/ grey/black	-6.82		
	FD9	brown/ beige/brown	-6.82		
	FE1	beige/ beige/brown	-6.82		
	JR4	black/ light grey-black F >>94DN4 03821			

Pos	Part Number	Name	Remarks	Qty	Model
	JR5	brown/ brown-grey F >>94DN4 03821			
	JR6	grey-beige/ brown-grey F >>94DN4 03821			
	LD5	black/ light grey-black F 94DN4 03822>>			
	LD6	brown/ brown-grey F 94DN4 03822>>			
	LD7	grey-beige/ brown-grey F 94DN4 03822>>			
1A	477 885 045 C	backrest leatherette/ backrest surface berber cloth		1	
	GE9	black/ grey/black			
	FE3	brown/ beige/brown			
	FE4	beige/ beige/brown			
	JR8	grey-beige/ grey-beige-grey			
1B	477 885 045 C	backrest leatherette		1	
	DD2	beige	-6.82		
	DD4	brown F >>94DN4 03821			
	DD6	black F >>94DN4 03821			
	4FK	grey-beige F >>94DN4 03821			
	JN3	black F 94DN4 03822>>			
	JN4	brown F 94DN4 03822>>			
	JN5	grey-beige F 94DN4 03822>>			
1	944 522 045 00	backrest leatherette/ centre part pin stripe velour	84-	1	
	JN1	black/ black-white			
	JN2	brown/ brown-beige			
	LD4	grey-beige/ grey-beige-white			
1	944 522 045 00	backrest leatherette/ centre part checker board velour	84-	1	
	LD5	black/ light grey-black			
	LD6	brown/ brown-grey			
	LD7	grey-beige/ brown-grey			
1	944 522 045 00	backrest leatherette/ centre part porsche lettering cloth	84-	1	
	LR6	black/black	84		
	LR7	brown/brown	84		
	LR8	grey-beige/grey-beige	84		
	PX1	black/black	85		
	PX3	brown/brown	85		
	QD8	grey-beige/grey-beige	85		
1A	944 522 045 00	backrest leatherette/ backrest surface porsche lettering cloth	84-	1	
	LR1	black/black	84		
	LR2	brown/brown	84		
	LR3	grey-beige/grey-beige	84		

Pos	Part Number	Name	Remarks	Qty	Model
	PX2	black/black	85		
	PX4	brown/brown	85		
	QD9	grey-beige/grey-beige	85		
1A	944 522 045 00	backrest leatherette/ backrest surface pin stripe velour	84-	1	
	QE5	black/ black-white	84		(F)
1B	944 522 045 00	backrest leatherette	84-	1	
	JN3	black			
	JN4	brown			
	JN5	grey-beige			
1C	944 522 045 00	backrest leatherette/ centre part pin stripe velour	84-	1	
	PL8	black/ black-red	84		(CH)
2	477 885 871 B	seat cushion leatherette/ centre part pin stripe velour		1	
	FD5	black/ black-white F >>94DN4 03821			
	FD6	brown/ brown-beige F >>94DN4 03821			
	FD7	beige/ brown-beige	-6.82		
	JR7	grey-beige/ grey-beige-white F >>94DN4 03821			
	JN1	black/ black-white F 94DN4 03822>>			
	JN2	brown/ brown-beige F 94DN4 03822>>			
	LD4	grey-beige/ grey-beige-white F 94DN4 03822>>			
2	477 885 871 B	seat cushion leatherette/ centre part checker board velour		1	
	FD8	black/ grey/black	-6.82		
	FD9	brown/ beige/brown	-6.82		
	FE1	beige/ beige/brown	-6.82		
	JR4	black/ light grey-black F >>94DN4 03821			
	JR5	brown/ brown-grey F >>94DN4 03821			
	JR6	grey-beige/ brown-grey F >>94DN4 03821			
	LD5	black/ light grey-black F 94DN4 03822>>			
	LD6	brown/ brown-grey F 94DN4 03822>>			
	LD7	grey-beige/ brown-grey F 94DN4 03822>>			
2	477 885 871 B	seat cushion leatherette/ centre part porsche lettering cloth		1	
	LR6	black	84		
	LR7	brown	84		
	LR8	grey-beige	84		
	PX1	black/black	85		
	PX3	brown/brown	85		
	QD8	grey-beige/grey-beige	85		

Pos	Part Number	Name	Remarks	Qty	Model
2A	477 885 871 B	seat cushion leatherette/ seat surface berber cloth		1	
	GE9	black/ grey/black			
	FE3	brown/ beige/brown			
	FE4	beige/ beige/brown			
	JR8	grey-beige/ grey-beige-grey			
2A	477 885 871 B	seat cushion leatherette/ seat surface porsche lettering cloth		1	
	LR1	black/black	84		
	LR2	brown/brown	84		
	LR3	grey-beige/grey-beige	84		
	PX2	black/black	85		
	PX4	brown/brown	85		
	QD9	grey-beige/grey-beige	85		
2A	477 885 871 B	seat cushion leatherette/ seat surface pin stripe velour		1	
	QE5	black/ black-white	84		(F)
2B	477 885 871 B	seat cushion leatherette		1	
	DD2	beige	-6.82		
	DD4	brown F >>94DN4 03821			
	DD6	black F >>94DN4 03821			
	4FK	grey-beige F >>94DN4 03821			
	JN3	black F 94DN4 03822>>			
	JN4	brown F 94DN4 03822>>			
	JN5	grey-beige F 94DN4 03822>>			
2C	477 885 871 B	seat cushion leatherette/ centre part pin stripe velour		1	
	PL8	black/ black-red	84		(CH)

- -- E N D -- -

Model	Year	MG	SG	Illustration	Restrictions	Update	10:44	07.04.2005	PORSCHE PET PORSCHE
944	85	8	08	808-25		187			

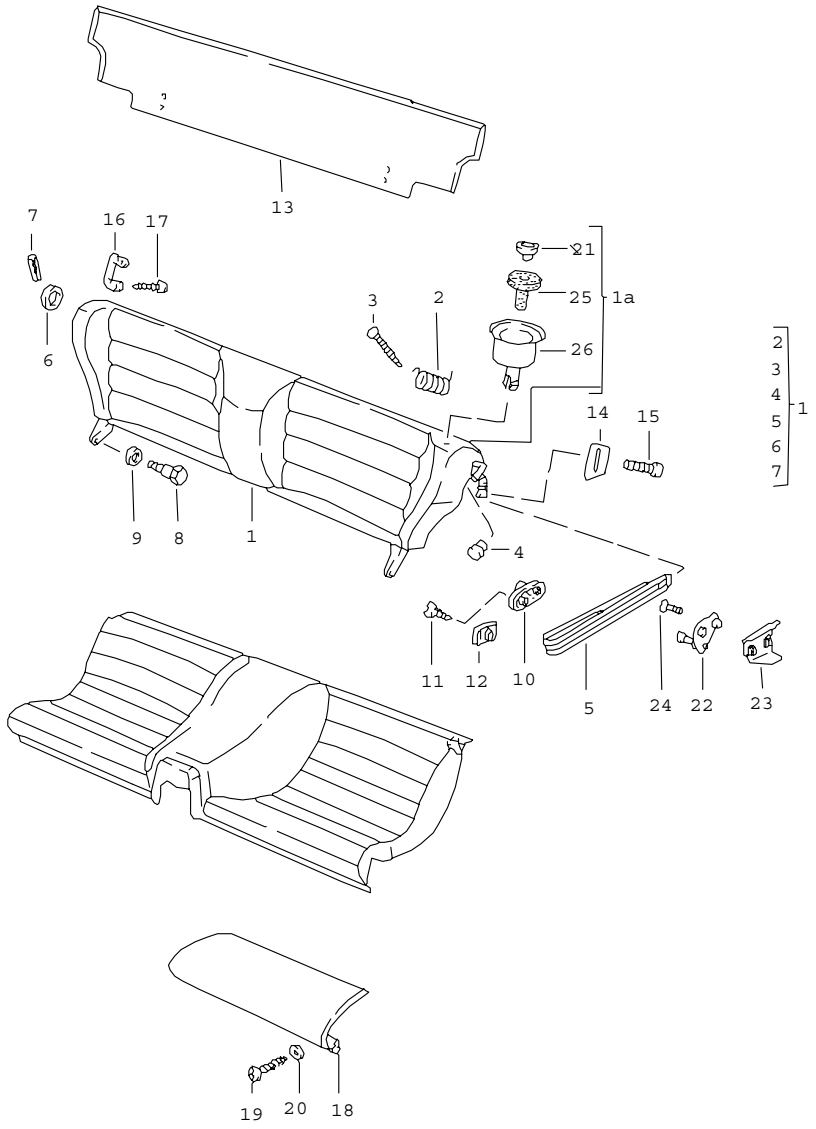

Pos	Part Number	Name	Remarks	Qty	Model
		back seat single parts			
1	477 885 045 C	backrest please state the colour see group 8 / 08 / 20	-83	1	
1A	944 522 045 00	backrest please state the colour see group 8 / 08 / 20	84-	1	
2	111 885 657	spring	-83	1	
3	113 881 899	special tack	-83	1	
4	477 885 699 B	plug	/L -83	1	
(4)	477 885 699 C	plug	/R -83	1	
5	477 885 667	loop	/L -83	1	
	05T	black			
	21S	brown F >>94DN4 03821			
	4FK	grey-beige	7.82-		
	4RB	brown F 94DN4 03822>>			
6	E 477 885 555	cover	-83	1	
7	900 197 010 00	roll pin 3 X 22	-83	1	
8	477 885 767	hexagon-head bolt		2	
9	900 025 007 02	washer A 8,4		2	
10	111 867 329 A	locking lug	/L -83	1	
(10)	E 111 867 330 A	locking lug	/R -83	1	
11	E N 014 002 1	counters. head tapp. screw B 6,3 X 22	-83	4	
12	999 591 327 02	speed nut B 6,3	-83	4	
13	477 885 831 A	cover	-83	1	
	3BF	black			
	1NF	beige	82		

Pos	Part Number	Name	Remarks	Qty	Model
	8NF	brown			
	4BF	grey			
	3FF	grey-beige	83-		
13	944 522 831 00	carpet for back seat backrest	84-	1	
	3BF	black			
	4BF	grey			
	8NF	brown			
	3FF	grey-beige			
14	477 885 865	stop	/L -83	1	
(14)	477 885 866	stop	/R -83	1	
15	N 014 155 1	oval-head screw M 5 X 22	-83	4	
16	477 885 761	holder		2	
17	N 014 096 3	tapping screw B 4,2 X 22		4	
18	477 885 041 B	back seat extension leatherette	/L	1	(J)
	43S	black			
	83S	beige	-6.82		
	87S	brown F >>94DN4 03821			
	4FK	grey-beige	7.82-		
	4RB	brown F 94DN4 03822>>			
(18)	477 885 042 B	back seat extension leatherette	/R	1	(J)
	43S	black			
	83S	beige	-6.82		
	87S	brown F >>94DN4 03821			
	4FK	grey-beige	7.82-		
	4RB	brown F 94DN4 03822>>			
19	N 043 940 3	tapping screw 4,2 X 25		6	(J)
20	900 151 028 02	washer 4,3		6	(J)
21	944 522 317 00	push button	84-	2	
	01C	satin black			
22	944 522 029 00	locking lug	/L 84-	1	
(22)	944 522 030 00	locking lug	/R 84-	1	
23	944 522 031 00	support	84-	2	
24	999 219 012 07	countersunk-head screw M 6 X 22	84-	4	
25	944 522 319 00	guide piece		2	
26	944 522 315 00	rose		2	
	01C	satin black			

- -- E N D -- -

Model	Year	MG	SG	Illustration	Restrictions	Update	10:45	07.04.2005	PORSCHE PET PORSCHE
944	85	8	09	809-00		187			

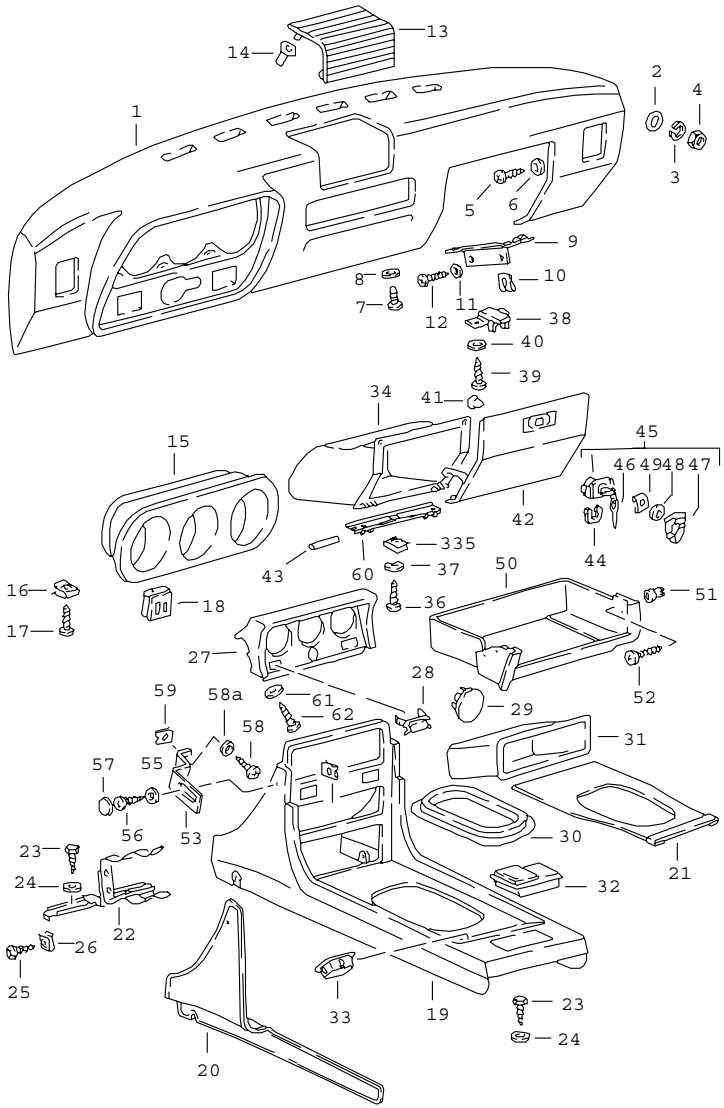

Pos	Part Number	Name	Remarks	Qty	Model
		dashboard			
1	477 857 881 C	dashboard	/LL	1	
	1DB	black	-6.82		
	4RB	brown			
(1)	478 857 881 C	dashboard	/RL	1	
	1DB	black	-6.82		
	4RB	brown			
1	477 857 881 A	dashboard	/LL	1	
	1DB	black	7.82-		
(1)	478 857 881 A	dashboard	/RL	1	
	1DB	black	7.82-		
2	N 011 612 3	washer R 7		2	
3	N 012 036 1	lock ring 6		2	
4	900 076 010 02	hexagon nut M 6		2	
5	900 143 007 02	tapping screw B 4,2 X 13		4	
6	900 151 028 02	washer B 4,3		4	
7	N 014 140 5	oval-head screw M 6 X 15		1	
8	N 011 524 7	washer A 6,4		1	
9	E 477 857 195 B	support	/LL	1	
10	N 015 429 2	speed nut	/LL	2	
11	900 025 002 02	washer A 4,3	/LL	2	
12	N 013 964 4	tapping screw B 4,2 X 16	/LL	2	
13	477 857 187	loudspeaker grille		1	
	01C	black			
	89S	brown			

Pos	Part Number	Name	Remarks	Qty	Model
14	477 857 821	grommet loudspeaker grille		4	
15	477 857 283 A	covering for instruments	84	1	(CH)(F)
	FP7	black			
15	477 857 283 A	covering for instruments		1	
	FP7	black			
16	999 591 722 02	speed nut B 4,8 X 19,8		2	
17	N 014 098 6	tapping screw B 4,8 X 16		2	
18	477 857 137 A	cover light switch	83-	1	
	1DB	black			
	4RB	brown			
18	477 857 137	cover light switch	-82	1	
	01C	black			
	89S	brown			
(18)	477 857 138 A	cover switch rear window heating	83-	1	
	1DB	black			
	4RB	brown			
(18)	477 857 138	cover switch rear window heating	-82	1	
	01C	black			
	89S	brown			
19	477 857 931 A	centre console		1	
	1DB	black			
	4RB	brown			
20	477 863 741	lining	/L	1	
	3BF	black			
	8NF	brown			
	1NF	beige			
	4BF	grey			
	3FF	grey-beige			
(20)	477 863 742	lining	/R	1	
	3BF	black			
	8NF	brown			
	1NF	beige			
	4BF	grey			
	3FF	grey-beige			
21	477 863 749	carpet		1	
	1DR	black			
	8NF	brown			
	1NF	beige			
	4BF	grey			
	3FF	grey-beige			
22	477 857 067 A	support centre console		1	
23	N 013 891 1	tapping screw B 6,3 X 19		4	
24	N 011 533 2	washer A 7		4	
25	N 013 957 5	tapping screw BZ 3,5 X 9,5		2	
26	N 015 438 1	speed nut		2	
27	477 857 977 B	instrument insert	84	1	(CH)(F)
	1DB	black			
27	477 857 977 C	instrument insert		1	
	1DB	black			
	4RB	brown			
28	944 552 387 00	cover		1	
29	841 863 267	cover		1	(J)

Pos	Part Number	Name	Remarks	Qty	Model
	041	black			
30	477 857 975	support frame		1	
	01C	black			
	89S	brown			
31	481 857 233 A	package box		1	
32	944 552 305 00	ashtray		1	
	1DB	black			
	4RB	brown			
33	911 552 469 00	cover		X	
34	477 857 095 B	glove compartment F >>94DN4 08113		1	
(34)	477 857 095 C	glove compartment F 94DN4 08114>>		1	
35	999 507 252 02	nut B 3,9 X 16,5		2	
36	N 013 962 3	tapping screw B 3,9 X 16		5	
37	N 011 692 3	washer		5	
38	477 857 143	lock piece		1	
	01C	black			
39	900 143 007 02	tapping screw B 4,2 X 13		2	
40	900 025 002 02	washer A 4,3		2	
41	N 020 022 3	plug A 8 X 1		1	
42	477 857 123	glove box cover	/LL	1	
	1DB	black			
(42)	478 857 123	glove box cover	/RL	1	
	1DB	black			
42	477 857 123 A	glove box cover	/LL	1	
	4RB	brown			
(42)	478 857 123 A	glove box cover	/RL	1	

Pos	Part Number	Name	Remarks	Qty	Model
	4RB	brown			
43	N 013 209 2	straight pin 4 H 8 X 36		2	
44	133 857 119	clamp		1	
	01C	black			
45	477 857 133 C	lock with keys		1	
	01C	black			
	90V	brown			
46	477 857 135 A	blank key		2	
46	477 857 136 A	key with stipulated lock-no. state lock number		1	
47	944 559 097 00	emblem		1	
48	N 011 536 1	washer A 2,2		1	
49	N 012 852 1	clamping washer		1	
50	477 857 836	shelf		1	
	01C	black			
	89S	brown			
51	477 857 173	clip	/LL	1	
52	N 043 940 3	tapping screw B 4,8 X 25	/LL	1	
53	477 857 941	bracket		2	
54	N 015 422 2	speed nut		2	
55	900 151 028 02	washer B 4,3		2	
56	311 867 167	tapping screw		2	
57	311 867 169	cap		2	
	01C	black			
	90V	brown			
58	900 143 007 02	tapping screw B 4,2 X 13		2	

Pos	Part Number	Name	Remarks	Qty	Model	Pos	Part Number	Name	Remarks	Qty	Model
58A	E 900 904 013 02	washer A 4,55		2							
59	999 591 850 02	speed nut		2							
60	944 552 195 00	hinge F 94DN4 08114>>		1							
-	E N 013 981 3	tapping screw B 3,9 X 13 F 94DN4 08114>>		1							
61	N 011 535 5	washer A 3,2		2							
62	N 013 953 9	tapping screw B 2,9 X 9,5		2							
		- -- E N D -- -									

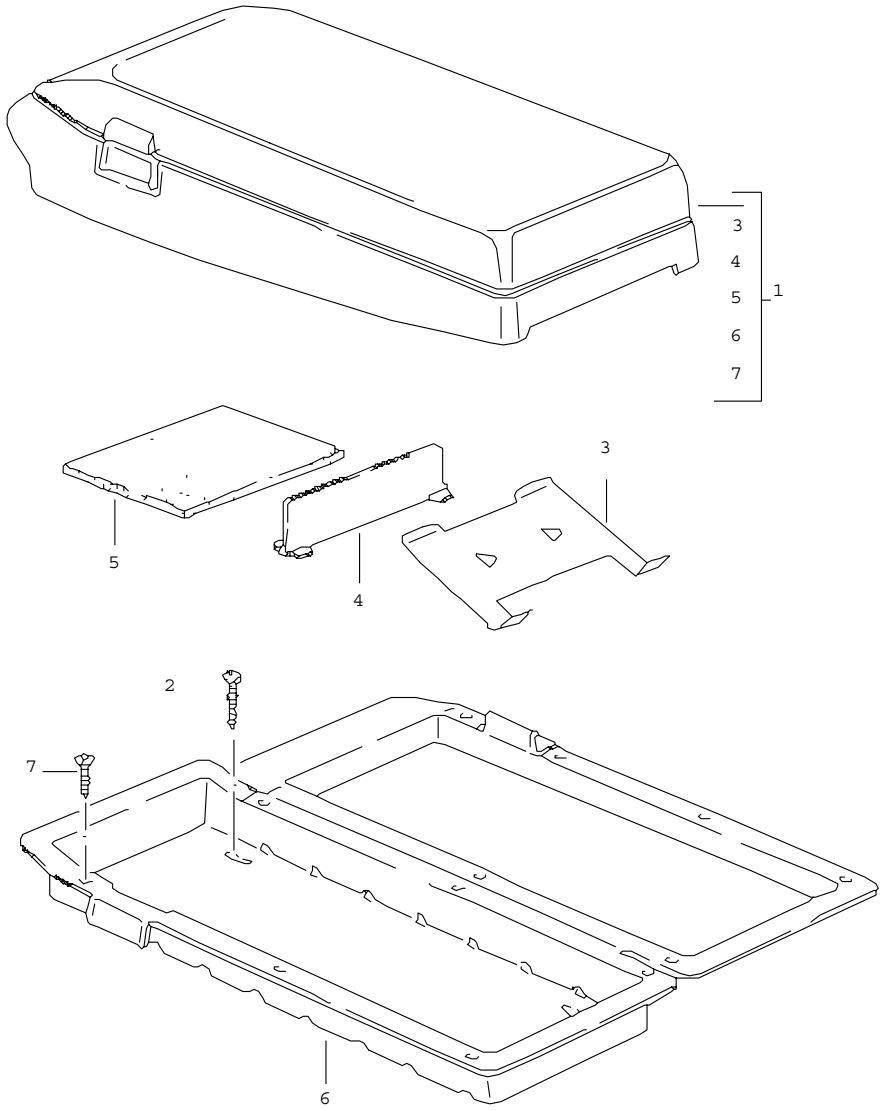

Pos	Part Number	Name	Remarks	Qty	Model
		cassette box			
1	477 857 059	cassette box	/LL	1	
	05T	black			
	4RB	brown			
(1)	478 857 059	cassette box	/RL	1	
	05T	black			
	4RB	brown			
2	999 450 001 07	round head screw B4,2 X 25		4	
3	928 555 731 02	cassette support		6	
	01C	satin black			
4	928 555 741 02	partition panel		1	
5	928 555 735 03	cover		1	
6	928 555 729 03	insert	/LL	1	
	01C	satin black			
(6)	927 555 729 03	insert	/RL	1	
	01C	satin black			
7	900 143 065 07	tapping screw B 2,9 X 9,5		14	
		- -- E N D -- -			

Model	Year	MG	SG	Illustration	Restrictions	Update				
944	85	8	09	809-05		187	10:45	07.04.2005	PORSCHE	PET	PORSCHE

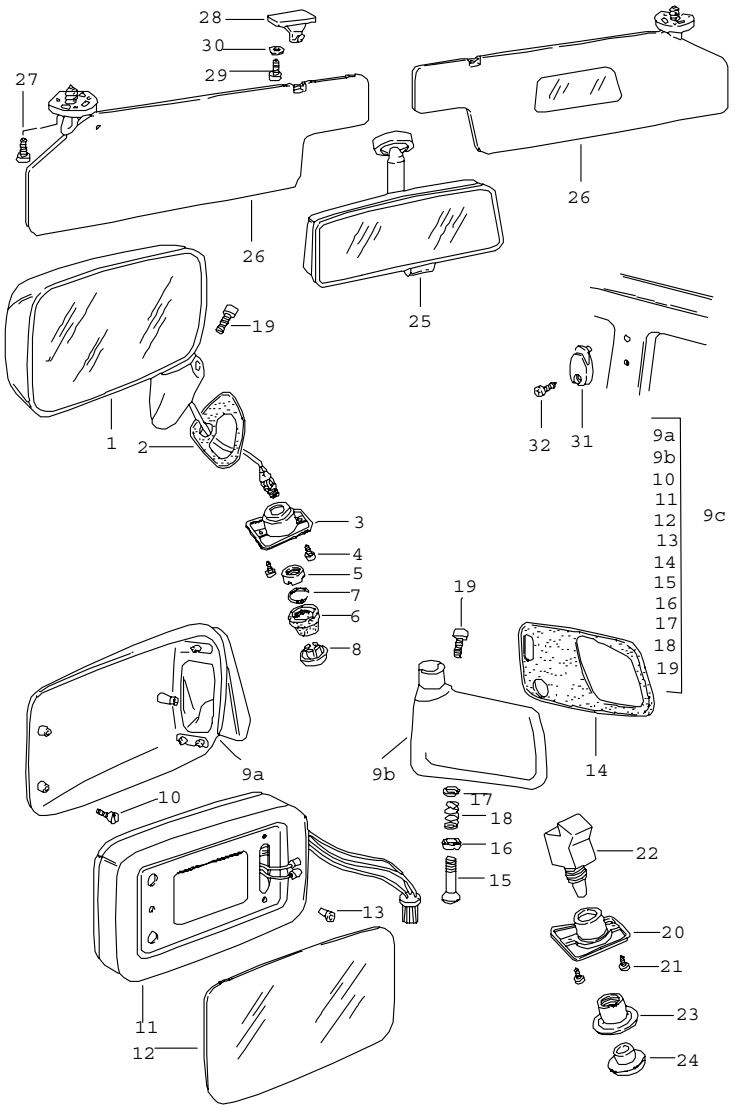

Pos	Part Number	Name	Remarks	Qty	Model
		interior mirror door mirror sun visor			
1	477 857 521 E	door mirror plan	/LL/L	1	
(1)	478 857 522 F	door mirror plan	/RL/R	1	
(1)	477 857 522 B	door mirror convex	/LL/R	1	
(1)	477 857 522 C	door mirror plan	/LL/R	1	
-	477 857 611 B	mirror glass plan		1	
-	477 857 611 C	mirror glass convex		1	(S)
2	477 857 579	desk pad	/L	1	
(2)	478 857 579	desk pad	/R	1	
3	477 867 523	mounting piece		1	
	01C	black			
4	N 014 090 5	tapping screw 3,9 X 13		2	
5	477 857 615	threaded bush		1	
	01C	black			
6	477 857 619	bellows		1	
7	477 857 641	retainer		1	
8	477 857 617	knob		1	
	01C	black			
		door mirror electrically adjustable			
9A	911 731 043 03	mirror housing	/L	1	
(9A)	911 731 044 03	mirror housing	/R	1	
9B	928 731 141 06	mirror base	/LL/L	1	
(9B)	928 731 143 08	mirror base	/LL/R	1	
(9B)	927 731 141 06	mirror base	/RL/R	1	

Pos	Part Number	Name	Remarks	Qty	Model
(9B)	927 731 143 08	mirror base	/RL/L	1	
9C	477 898 027	door mirror plan	/LL/L	1	
(9C)	477 898 028	door mirror plan	/LL/R	1	
(9C)	477 898 029	door mirror convex	/LL/L	1	
(9C)	477 898 030	door mirror convex	/LL/R	1	(S) (N) (J)
(9C)	478 898 027	door mirror plan	/RL/L	1	
(9C)	478 898 028	door mirror plan	/RL/R	1	
(9C)	478 898 029	door mirror convex	/RL/L	1	
10	999 143 003 02	hexagon-head bolt M 5 X 10		3	
11	911 731 027 06	frame	/L	1	
(11)	911 731 028 06	frame	/R	1	
12	911 731 035 08	mirror glass plan		1	
(12)	911 731 035 09	mirror glass convex		1	
13	999 703 128 40	grommet		3	
14	944 731 505 00	desk pad	/LL/L	1	
(14)	944 731 508 00	desk pad	/LL/R	1	
(14)	945 731 506 00	desk pad	/RL/R	1	
(14)	945 731 507 00	desk pad	/RL/L	1	
15	911 731 257 02	guide tube		1	
16	911 731 345 02	adjusting washer lower		1	
17	911 731 347 00	adjusting washer upper		1	
18	911 731 029 01	compression spring		1	
19	999 067 026 07	pan-head screw M 5 X 40 X 25		1	

Pos	Part Number	Name	Remarks	Qty	Model
20	E 477 867 181	mounting piece		1	
21	N 014 090 5	tapping screw 3,9 X 13		2	
22	911 613 115 00	switch		1	
23	928 555 463 02	threaded bush		1	
24	928 613 462 00	knob		1	
		electric equipment door mirror		1	
-	477 971 111	harness door mirror driver's door		1	
-	477 971 115 A	harness door mirror dashboard	/LL	1	
-	E 478 971 115 A	harness door mirror dashboard	/RL	1	
-	477 971 910	bellows see group 8/04/00		1	
		electric equipment door mirror		2	
-	477 971 115	harness door mirror dashboard	/LL	1	
-	478 971 115	harness door mirror dashboard	/RL	1	
-	477 971 113	harness door mirror passenger's door		1	
-	477 955 703	rocker switch passenger's side	/LL	1	
-	478 955 703	mirror changeover switch passenger's side	/RL	1	
-	803 971 979	plug socket 7-pole		X	
-	477 971 910	bellows see group 8/04/00		2	

Pos	Part Number	Name	Remarks	Qty	Model
-	* 477 898 025	installation set electric adjustable and heatable door mirror plan	/LL/L	1	
-	* 477 898 026	installation set electric adjustable and heatable door mirror plan	/LL/R	1	
25	477 857 511	interior mirror		1	
26	A 477 857 551	sun visor without mirror	/L -84	1	
	05T	black			
	21S	brown F >>94DN4 03821			
	4RB	brown F 94DN4 03822>>			
(26)	478 857 551 A	sun visor with mirror	/L -84	1	
	05T	black			
	21S	brown F >>94DN4 03821			
	4RB	brown F 94DN4 03822>>			
(26)	477 857 551 D	sun visor with mirror	/L -84	1	(AUS)
	05T	black			
	21S	brown F >>94DN4 03821			
	4RB	brown F 94DN4 03822>>			
(26)	477 857 552 C	sun visor with mirror	/R -84	1	
	05T	black			
	21S	brown F >>94DN4 03821			
	4RB	brown F 94DN4 03822>>			
(26)	477 857 552 A	sun visor without mirror	/R -84	1	
	05T	black			
	21S	brown F >>94DN4 03821			
	4RB	brown F 94DN4 03822>>			
(26)	477 857 552 B	sun visor without mirror	/R -84	1	(AUS)
	05T	black			
	21S	brown F >>94DN4 03821			
	4RB	brown F 94DN4 03822>>			
(26)	944 731 031 01	sun visor	/L 85-	1	
	05T	black			
	4RB	brown			
	3MX	burgundy			
(26)	944 731 032 01	sun visor	/R 85-	1	
	05T	black			
	4RB	brown			
	3MX	burgundy			
27	N 014 096 3	tapping screw B 4,2 X 22		6	
28	803 857 561 A	support	-84	2	
	01C	satin black			
(28)	944 731 439 00	support sun visor	85-	2	
29	900 143 047 07	tapping screw B 4,2 X 19		4	
30	900 151 028 02	washer B 4,3		4	
31	171 857 635	coat hook		2	
	01C	black			

Pos	Part Number	Name	Remarks	Qty	Model	Pos	Part Number	Name	Remarks	Qty	Model
32	171 857 650	screw 4,8 X 16		2							
		- -- E N D -- -									

Model	Year	MG	SG	Illustration	Restrictions	Update				
944	85	8	09	809-10		187	10:45	07.04.2005	PORSCHE	PET	PORSCHE

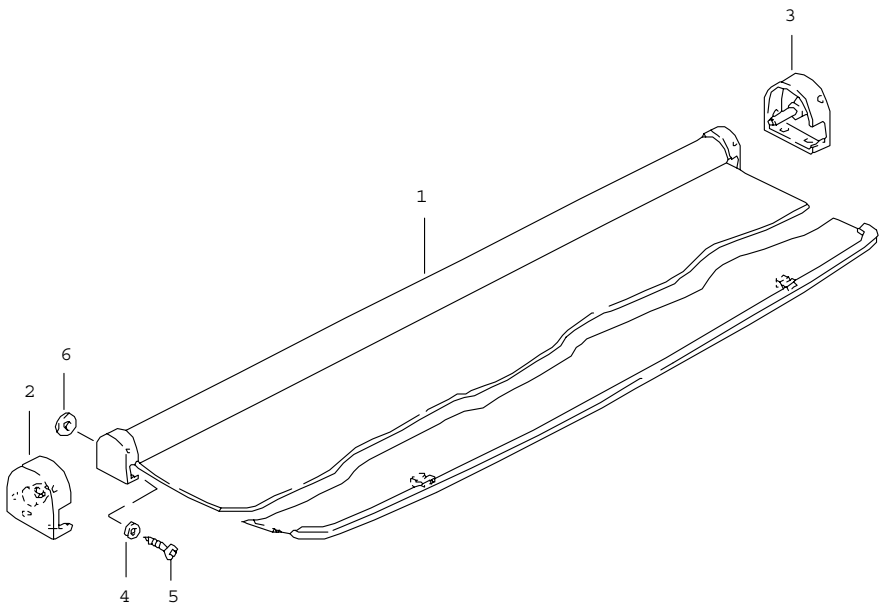

Pos	Part Number	Name	Remarks	Qty	Model
		luggage boot cover			
1	477 863 511 A	luggage boot cover		1	
	05T	black			
	89S	brown			
-	477 863 521 B	hook		2	
2	477 863 517 A	cover luggage boot cover inner square 17,5 MM	/L	1	
	05T	black			
	89S	brown			
3	477 863 518 A	cover luggage boot cover pin 17,5 MM	/R	1	
	05T	black			
	89S	brown			
(2)	477 863 517 B	cover luggage boot cover hole 16 MM	/L	1	
	05T	black			
(3)	477 863 518 B	cover luggage boot cover inner square 16 MM	/R	1	
	05T	black			
4	900 025 003 02	washer A 5,3		2	
5	N 013 971 3	tapping screw 4,8 X 22		2	
6	999 704 139 40	spacer	84-	2	
		- -- E N D -- -			

Model	Year	MG	SG	Illustration	Restrictions	Update	10:46	07.04.2005	PORSCHE PET PORSCHE
944	85	8	10	810-00		187			

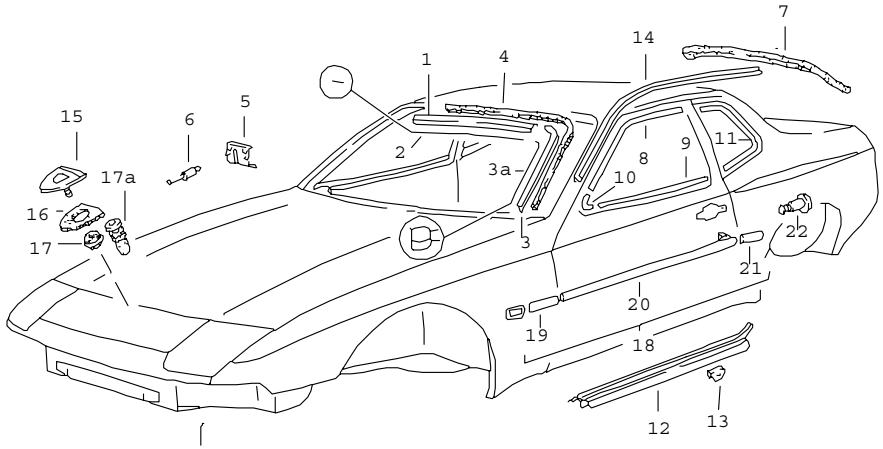

Pos	Part Number	Name	Remarks	Qty	Model
		trim frame			
1	944 559 043 00	moulding upper		1	
2	944 559 043 00	moulding F >>94CN4 03921		1	
3	944 559 045 00	moulding	/L	1	
(3)	944 559 046 00	moulding	/R	1	
3A	944 559 027 00	gasket F 94EN4 00551>>	/L	1	
(3A)	944 559 028 00	gasket F 94EN4 00551>>	/R	1	
5	477 853 659 B	clamp		16	
6	431 805 121 A	bolt		16	
7	477 853 313 A	trim frame rear window upper	/H	1	
8	477 853 373 B	moulding	/L	1	
(8)	477 853 374 B	moulding door	/R	1	
9	477 853 371 B	moulding	/L	1	
(9)	477 853 372 B	moulding door	/R	1	
10	477 853 375 A	moulding		2	
11	477 853 365 A	trim frame	/L	1	
(11)	477 853 366 A	trim frame	/R	1	
12	477 853 657 A	scuff plate	/L	1	
(12)	477 853 658 A	scuff plate	/R	1	
13	477 853 655	clamp		10	
14	477 853 705	roof moulding	/L	1	
(14)	477 853 706	roof moulding	/R	1	
-	944 559 159 02	plastic foam strip roof moulding		2	
15	A 901 559 210 20	lid emblem		1	
15	993 559 211 00	lid emblem		1	

Pos	Part Number	Name	Remarks	Qty	Model
16	901 559 215 20	desk pad		1	
17	999 591 423 03	tapping nut F >>94CN4 01716 F >>94DN4 00076		2	 (J)
17A	A 999 702 175 50	grommet		2	
17A	999 702 175 50	grommet		2	
18	* 931 559 901 00	set of moldings order also: adhesive AMV 176.000.05		1	M 418
19	931 559 137 00	moulding wing	/V	2	
20	931 559 133 00	moulding	/L	1	
(20)	931 559 134 00	moulding door	/R	1	
21	931 559 141 00	moulding	/L	1	
(21)	931 559 142 00	moulding side section	/R	1	
-	931 559 175 00	adhesive tape moulding wing	 /V	2	
-	931 559 165 00	adhesive tape moulding door		4	
-	A 931 559 182 00	adhesive tape	/L	1	
-	931 559 182 00	adhesive tape moulding side section		2	
-	AMV 176 000 05	adhesive sealing compound		1	
22	999 190 326 40	rivet		2	
		- -- E N D -- -			

Model	Year	MG	SG	Illustration	Restrictions	Update	10:46	07.04.2005	PORSCHE PET PORSCHE
944	85	8	10	810-05		187			

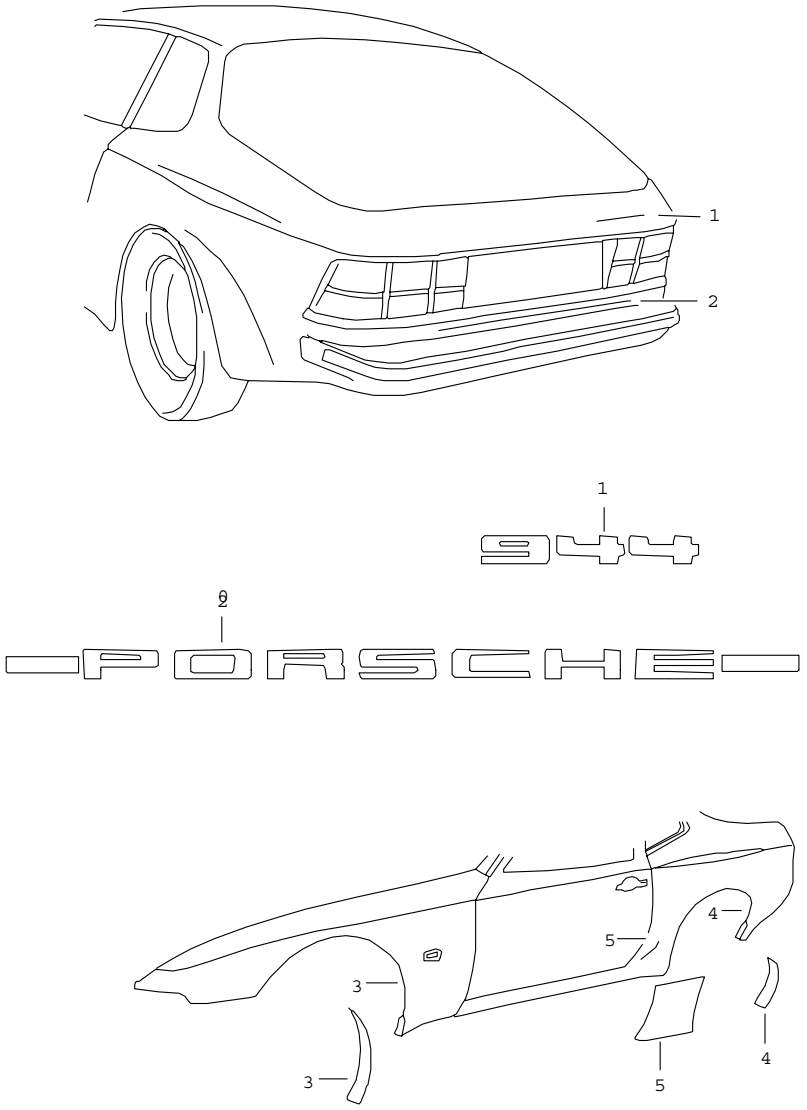

Pos	Part Number	Name	Remarks	Qty	Model
		insignias stone guard film			
1	944 559 193 00	logo black		1	
1	A 944 559 193 01	logo adhesive film white	-6.82	1	
1	944 559 295 02	logo adhesive film red	84	1	(CH)
1	944 559 193 01	logo silver		1	
2	477 853 635 B	logo adhesive film black	/H	1	
2	477 853 635 C	logo adhesive film silver	/H	1	
2	E 477 853 635 D	logo porsche red	84	1	(CH)
3	944 559 321 00	stone guard film clear	/L	1	
3	944 559 321 01	stone guard film	/L	1	
	90E	alpine white			
	Y7Y	zermatt silver metallic			
(3)	944 559 322 00	stone guard film clear	/R	1	
(3)	944 559 322 01	stone guard film	/R	1	
	90E	alpine white			
	Y7Y	zermatt silver metallic			
4	944 559 323 00	stone guard film clear	/L	1	
4	944 559 323 01	stone guard film	/L	1	
	90E	alpine white			
	Y7Y	zermatt silver metallic			
(4)	944 559 324 00	stone guard film clear	/R	1	

Pos	Part Number	Name	Remarks	Qty	Model
(4)	944 559 324 01	stone guard film	/R	1	
	90E	alpine white			
	Y7Y	zermatt silver metallic			
5	944 559 325 00	stone guard film clear	/L	1	
5	944 559 325 01	stone guard film	/L	1	
	90E	alpine white			
	Y7Y	zermatt silver metallic			
(5)	944 559 326 00	stone guard film clear	/R	1	
(5)	944 559 326 01	stone guard film	/R	1	
	90E	alpine white			
	Y7Y	zermatt silver metallic			
		- -- E N D -- -			

Pos	Part Number	Name	Remarks	Qty	Model

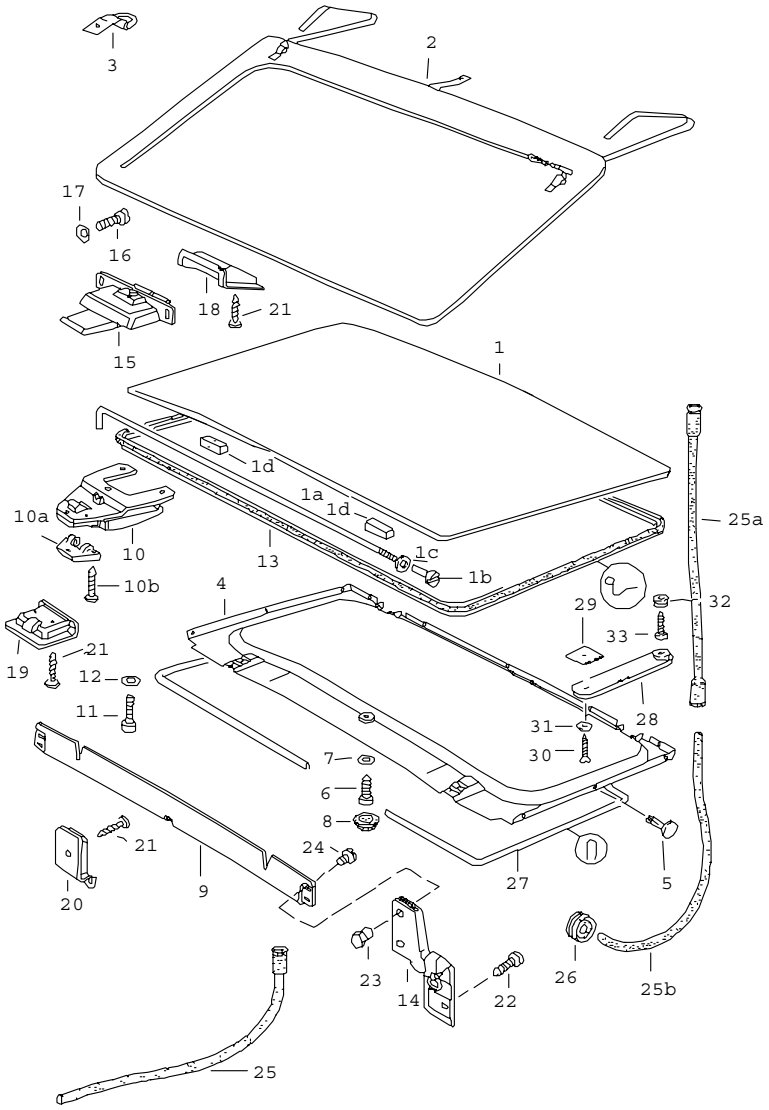

Pos	Part Number	Name	Remarks	Qty	Model
		lifting roof	-83		M 650
1	477 871 021	roof		1	
1A	477 871 761	tensioning device		1	
1B	477 871 763 A	threaded sleeve		1	
1C	N 011 524 7	washer B 6		1	
1D	477 871 789	sealing strip		2	
2	477 871 027	pocket		1	
	05T	black			
	21S	brown			
2	477 871 027	pocket F >>94DN4 03821		1	
	4RB	brown F 94DN4 03822>>			
3	477 871 029	support		1	
	041	black			
	90V	dark brown			
4	477 871 047 B	lining		1	
	05T	black			
	21S	brown	-6.82		
	4RB	brown	7.82-		
	1DB	black			
5	477 871 053	clip		11	
6	311 867 167	tapping screw 4,2		1	
7	900 151 028 02	washer 4,3		1	
8	311 867 169	cap		1	
	01C	black			
	90V	brown			
9	944 564 993 00	air deflector		1	
10	477 871 217	roof catch	/V	2	

Pos	Part Number	Name	Remarks	Qty	Model
10A	477 871 219	bearing bracket		2	
	01C	black			
10B	N 033 174 1	countersunk-head screw 3 X 6		6	
11	N 033 018 1	lens-head screw M 5 X 12		2	
12	999 704 605 07	cone washer		2	
13	944 564 114 01	gasket		1	
14	477 871 635 A	hinge	/L	1	
(14)	477 871 636 A	hinge	/R	1	
15	477 871 649	roof catch	/H	2	
16	900 146 003 02	oval-head screw AM 5 X 11		8	
17	N 012 222 4	spring washer B 5		8	
18	477 871 651 A	locking bracket		2	
19	477 871 665 A	centring wedge	/V	2	
20	477 871 683 A	bearing		1	
21	N 013 964 4	tapping screw B 4,2 X 16		9	
22	900 143 031 02	oval-head sheetmetal screw B 4,2 X 9,5		4	
23	477 871 701 A	cap nut		4	
24	477 837 959	self-lock. fillister screw		4	
25	321 877 233 C	water drain hose	/V	2	
25A	944 564 235 00	water drain hose	/L/H	1	
25B	944 564 237 00	water drain tube	/L/H	1	
(25A)	944 564 064 00	water drain hose	/R/H	1	
(25B)	944 564 238 00	water drain tube	/R/H	1	
26	021 119 569	rubber sleeve		X	
27	944 564 621 00	protective edging		1	
28	477 871 501	securing strap		1	

Pos	Part Number	Name	Remarks	Qty	Model
	43S	black			
	87S	brown			
28	477 871 501	securing strap F >>94DN4 03821		1	
	4RB	brown F 94DN4 03822>>			
29	477 871 505	reinforcement plate		1	
30	N 014 091 4	tapping screw B 3,9 X 16		1	
31	N 011 590 1	cone washer		1	
32	477 871 509	ball knob		1	
33	900 143 003 00	tapping screw B 3,5 X 16		1	
34	E 477 871 159	lever		2	
35	E N 013 327 1	roll pin 3 X 18		2	
		- -- E N D -- -			

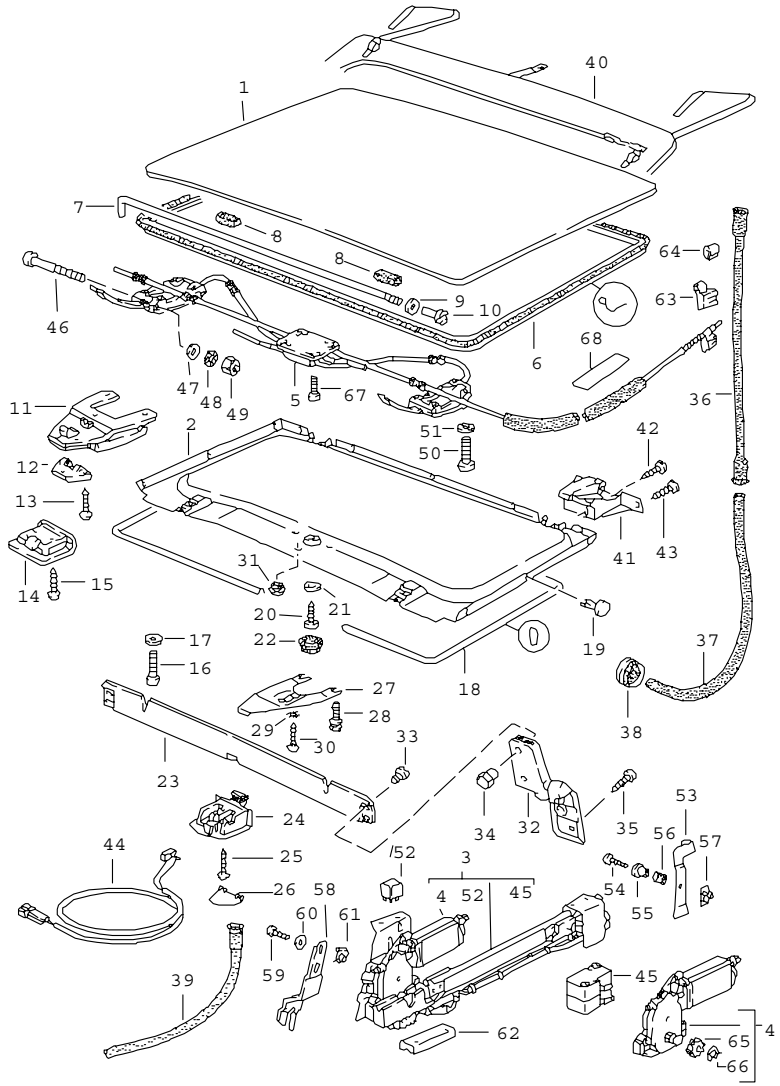

Pos	Part Number	Name	Remarks	Qty	Model
		lifting roof	84-		M 650
1	944 564 021 01	roof		1	
2	944 564 047 00	lining		1	
	05T	black			
	4RB	brown			
3	944 624 055 00	electric drive		1	
4	944 624 011 00	electric motor		1	
5	944 564 941 00	assembly kit see tpi group 8 NR. 43		1	
6	944 564 114 01	gasket		1	
7	477 871 761	tensioning device		2	
8	477 871 789	sealing strip		2	
9	N 012 226 5	spring washer B 6		2	
10	477 871 763 A	threaded sleeve		2	
11	477 871 217	roof catch	/V	2	
12	477 871 219	bearing bracket		2	
	01C	black			
13	N 033 174 1	countersunk-head screw M 3 X 6		6	
14	477 871 665 A	centring wedge	/V	2	
15	N 013 964 4	tapping screw B 4,2 X 16		4	
16	N 033 018 1	lens-head screw M 5 X 12		2	
17	999 704 605 07	cone washer		2	
18	944 564 621 00	protective edging		1	
19	477 871 053	clip		11	
20	311 867 167	tapping screw		1	
21	900 151 028 02	washer		1	

Pos	Part Number	Name	Remarks	Qty	Model
22	311 867 169	cap		1	
	01C	black			
	90V	brown			
23	944 564 093 00	air deflector		1	
24	944 564 683 00	bearing		1	
25	N 013 964 4	tapping screw 4,2 X 16		1	
26	944 564 685 00	flap		1	
27	944 564 223 00	fastening part centre		1	
28	944 564 224 00	adjusting screw		2	
29	N 012 222 4	spring washer A 5		1	
30	N 014 133 8	oval-head screw M 5 X 12		1	
31	944 564 233 00	cap		3	
	01C	black			
	90V	brown			
32	477 871 635 A	hinge	/L	1	
(32)	477 871 636 A	hinge	/R	1	
33	477 837 959	self-lock. fillister screw		4	
34	477 871 701 A	cap nut		4	
35	900 143 031 02	oval-head sheetmetal screw B 4,2 X 9,5		4	
36	944 564 235 00	water drain hose	/L/H	1	
(36)	944 564 064 00	water drain hose	/R/H	1	
37	944 564 237 00	water drain tube	/L/H	1	
(37)	944 564 238 00	water drain tube	/R/H	1	
38	021 119 569	rubber sleeve		X	
39	321 877 233 C	water drain hose	/V	2	
40	477 871 027	pocket		1	
	05T	black			
	4RB	brown			
41	944 564 161 00	guide	/L/H	1	
(41)	944 564 162 00	guide	/R/H	1	
42	N 014 133 8	oval-head screw M 5 X 12		2	
43	N 014 264 4	oval-head screw AM 5 X 10		4	
44	944 613 033 00	microswitch		1	
45	944 613 127 00	microswitch		2	
46	N 100 718 01	pan-head screw M 5 X 70		2	
47	900 025 003 02	washer A 5,3		2	
48	N 012 104 2	serrated lock washer 5,3		2	
49	N 011 005 14	hexagon nut M 5		2	
50	999 218 005 02	pan-head screw M 6		4	
51	N 011 524 7	washer A 6,4		4	
52	431 951 253 D	relay		2	
53	944 564 521 00	support		1	
54	E N 013 967 5	tapping screw BZ 4,2 X 19		1	
55	944 624 415 00	spacer sleeve		1	
56	944 624 417 00	rubber sleeve		1	
57	N 902 577 01	speed nut B 4,2		1	
58	944 564 433 00	support		1	
59	N 013 884 4	tapping screw BZ 4,8 X 13		2	
60	E N 012 201 2	washer 5,5		2	
61	999 591 722 02	speed nut B 4,8 X 19		2	

Pos	Part Number	Name	Remarks	Qty	Model
62	944 564 517 00	cover		1	
63	944 564 425 01	driver		1	
64	E 944 564 427 00	clamping sleeve		1	
64	E 944 564 427 00	clamping sleeve		1	
65	944 564 437 00	pinion		1	
66	900 116 003 02	circlip		1	
67	N 014 745 2	pan-head screw M 6 X 14 micro-self-locking		4	
68	944 556 441 00	felt strip		1	
		- -- E N D -- -			

Model	Year	MG	SG	Illustration	Restrictions	Update	10:47	07.04.2005	PORSCHE PET PORSCHE
944	85	8	12	812-00		187			

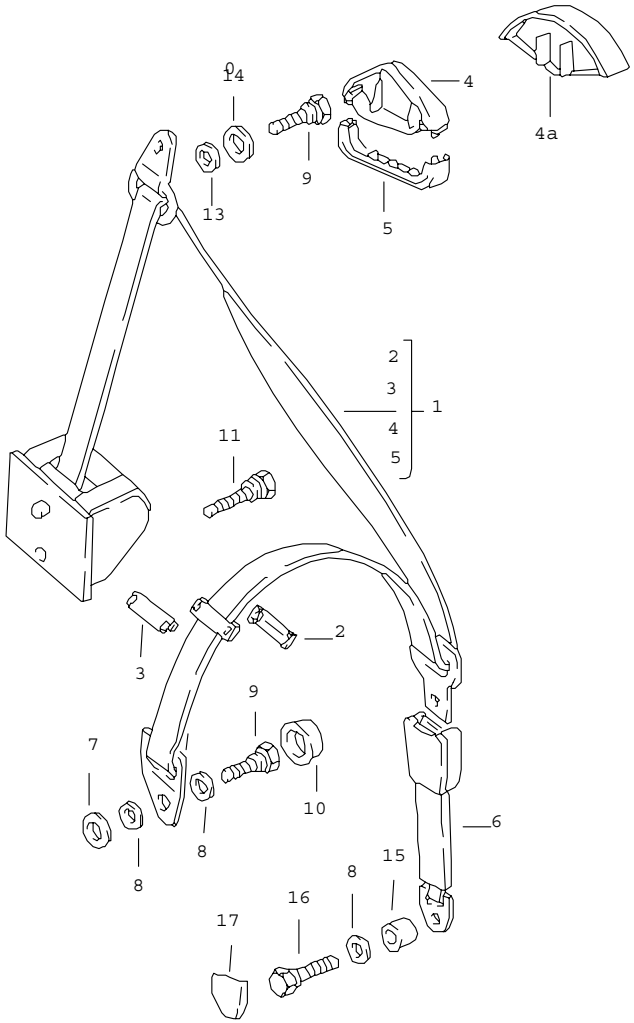

Pos	Part Number	Name	Remarks	Qty	Model
		seat belt front			
1	477 857 705 E	seat belt	/L	1	
(1)	477 857 705 G	seat belt	/L	1	(AUS)
(1)	944 803 125 00	seat belt	/L	1	
(1)	477 857 706 E	seat belt	/R	1	
(1)	477 857 706 G	seat belt	/R	1	(AUS)
(1)	944 803 126 00	seat belt	/R	1	
2	928 803 151 02	clip upper part		2	
3	928 803 153 02	clip lower part		2	
4	928 803 141 00	cover upper part		2	
4A	944 803 141 00	cover		2	
	70B	black			
5	928 803 143 00	cover lower part		2	
6	928 803 183 05	seat-belt buckle		2	
7	111 857 707 A	spacer		2	
8	911 803 533 00	cup spring		8	
9	111 857 793 E	fastening screw		4	
10	811 857 845	cap		2	
11	111 857 799 A	fastening screw		2	
13	928 803 212 02	spacer		2	
14	928 803 157 02	washer		2	
15	928 803 259 02	spacer sleeve		2	
16	111 857 793 E	fastening screw		2	
17	477 857 889	cap		2	
		- -- E N D -- -			

Model	Year	MG	SG	Illustration	Restrictions	Update				
944	85	8	12	812-05		187	10:47	07.04.2005	PORSCHE	PET	PORSCHE

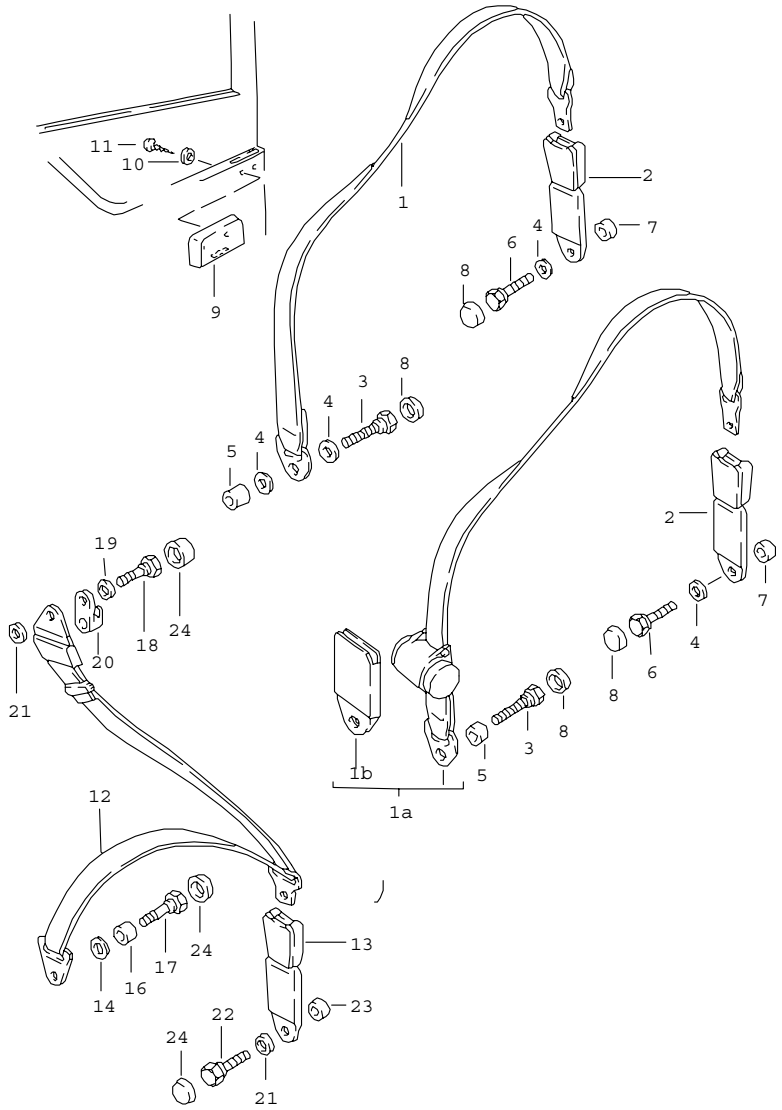

Pos	Part Number	Name	Remarks	Qty	Model
		seat belt rear			
1	477 857 795	lap belt		2	
2	477 857 739 A	seat-belt buckle		2	
3	A 803 019 811 B	screw		2	
3	111 857 793 E	fastening screw		2	
4	211 857 771	washer		6	
5	928 803 259 02	spacer sleeve		2	
6	477 857 853	screw		2	
7	477 857 643	spacer sleeve		2	
8	811 857 845	cap		4	
9	477 857 375 A	support for seatbelt		2	
	01C	black			
	89S	brown			
10	900 151 027 02	washer B 5,3 X 15		4	
11	900 146 003 02	oval-head screw M 5 X 11		4	
		three-point seat belt manual	-11.83		(AUS)
12	E 478 857 811 A	seat belt		2	
13	477 857 739 A	seat-belt buckle		2	
14	477 857 823	reducing ring		2	
16	901 803 114 40	spacer tube 8 MM		2	
17	111 857 799	screw		2	
18	111 857 793 E	fastening screw		2	
19	810 019 829	guide sleeve		2	
20	477 857 825 A	suspension		2	
21	911 803 533 00	cup spring		2	
22	477 857 853	screw		2	
23	477 857 643	spacer sleeve		2	

Pos	Part Number	Name	Remarks	Qty	Model
24	811 857 845	cap		6	
		three-point seat belt automatic	1.84-		(AUS) (N) +(SF)
(12)	945 803 021 00	seat belt	/L	1	
(12)	945 803 021 01	seat belt	/L	1	(AUS)(N)
(12)	945 803 022 01	seat belt	/R	1	
13	477 857 739 A	seat-belt buckle		2	
5	928 803 259 02	spacer sleeve		2	
3	111 857 793 E	fastening screw		2	
18	111 857 793 E	fastening screw		2	
19	945 803 311 00	spacer ring		2	
21	911 803 533 00	cup spring		2	
(21)	928 803 157 02	washer		2	
22	477 857 853	screw		2	
23	477 857 643	spacer sleeve		2	
24	811 857 845	cap		6	
-	911 803 150 00	screw		2	
		- -- E N D -- -			

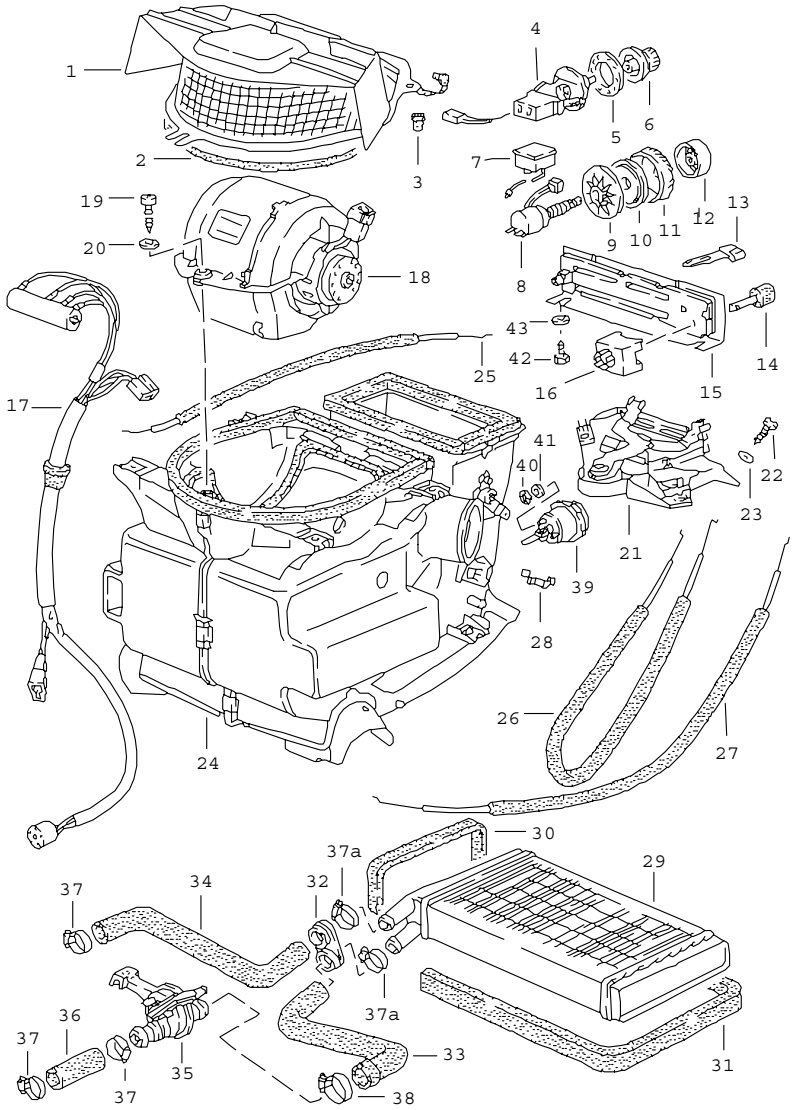

Pos	Part Number	Name	Remarks	Qty	Model
		heating ventilation heat exchanger			
1	944 572 145 00	cover		1	
-	E AMV 152 109 03	sealing cord 9 MM $ roller 4,5 METER		X	
2	-	740 MM		1	
3	477 819 253	grommet		3	
4	478 959 519	switch	/RL	1	M 573
5	477 959 517	rose	/RL	1	M 573
6	477 959 513	knob	/RL	1	M 573
7	477 959 531	booster		1	M 573
8	477 959 530	air-conditioning switch		1	M 573
9	477 959 527	fastening washer		1	M 573
10	477 959 526	spacer		1	M 573
11	477 959 528	adjusting wheel		1	M 573
12	477 959 529	knob		1	M 573
13	944 572 350 00	knob		3	
14	944 572 349 00	knob		1	
15	944 572 049 00	cover		1	
15	477 857 115	cover	84	1	(CH)(F)
16	321 959 511 A	blower switch		1	
17	477 971 281	resistor		1	
18	321 820 015 B	blower		1	
19	900 143 046 02	tapping screw B 4,8 X 16		1	
20	N 011 692 3	washer B 5,1		1	
21	321 819 045 C	control switch		1	
22	900 143 007 02	tapping screw B 4,2 X 13		2	

Pos	Part Number	Name	Remarks	Qty	Model
23	900 025 002 02	washer A 4,3		2	
24	944 572 023 00	flap control box		1	
(24)	944 573 023 00	flap control box		1	M 573
25	944 572 649 00	bowden cable		1	
26	944 572 648 00	bowden cable		1	
27	944 572 647 00	bowden cable		1	
28	477 819 343	spring clamp		1	
29	171 819 031 D	heat exchanger		1	
30	321 819 069 B	rubber seal		1	
31	191 819 069	gasket		1	
32	823 819 699 A	drain bush		1	
33	944 572 383 01	hose		1	
34	944 572 381 02	hose		1	
35	944 572 085 02	valve		1	
36	944 572 385 01	heater hose		1	
37	999 512 346 00	hose clamp LC 16-25		X	
37A	999 512 346 00	hose clamp SGT 16-25		2	
38	999 512 272 02	hose clamp LA 25-40		X	
39	944 573 053 00	vacuum unit			M 573
40	999 507 243 02	kronen-fix		3	M 573
41	928 574 465 02	rubber washer		3	M 573
42	900 187 114 07	tapping screw B 2,9 X 13		2	
43	N 011 662 1	washer 3,2		2	
		- -- E N D -- -			

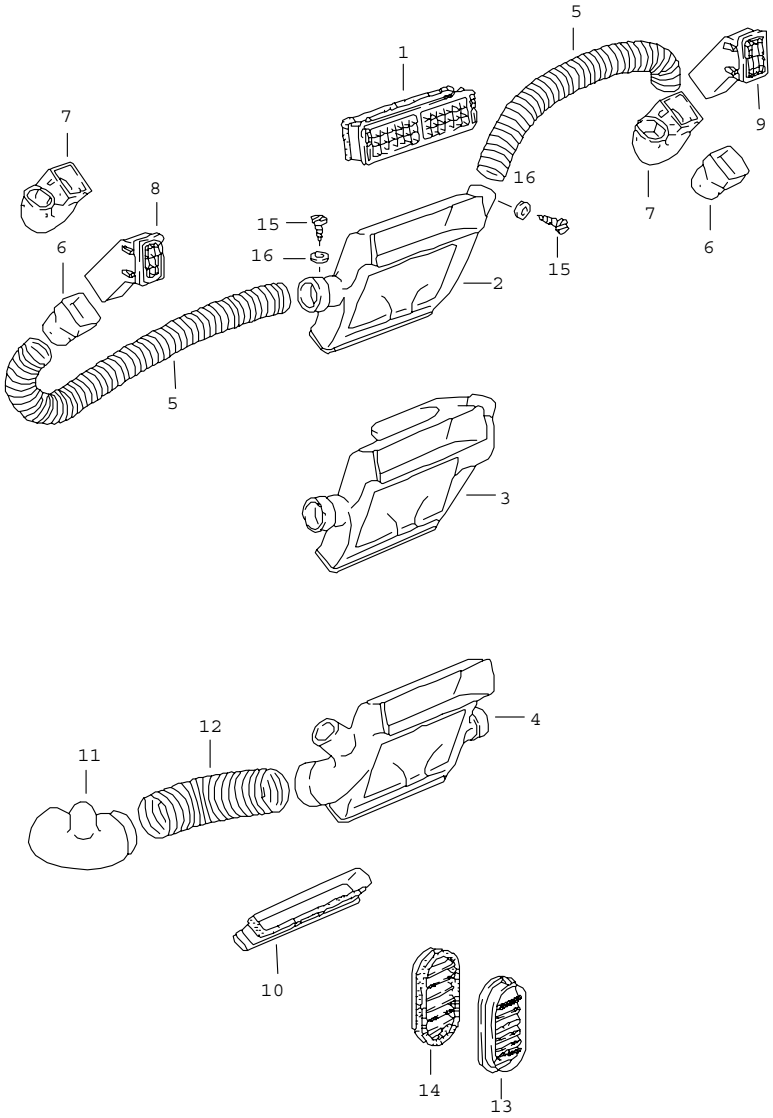

Pos	Part Number	Name	Remarks	Qty	Model
		air vent cover air hose			
1	944 572 059 00	centre nozzle		1	
	1DB	black			
	4RB	brown			
2	944 572 067 00	mixing chamber	/LL	1	
3	E 944 573 067 00	mixing chamber	/LL	1	M 573
4	945 572 067 00	mixing chamber	/RL	1	
(4)	945 573 067 00	mixing chamber	/RL	1	M 573
5	477 819 395	hose		2	
6	477 819 717	connecting piece	/LL/L	1	
6	477 819 717	connecting piece	/RL/R	1	
7	477 820 409	connecting piece	/LL/R	1	
7	477 820 409	connecting piece	/RL/L	1	
8	944 572 291 00	side vent	/L	1	
	1DB	black			
	4RB	brown			
9	944 572 292 00	side vent	/R	1	
	1DB	black			
	4RB	brown			
10	E 944 572 065 00	adapter		1	
11	478 820 211 A	intermediate piece	/RL	1	M 573
12	478 820 231	hose	/RL	1	M 573
13	477 819 175	cover lock pillar		2	
14	477 819 179 A	cover door	/L	1	
(14)	477 819 180	cover door	/R	1	
15	900 143 031 02	oval-head sheetmetal screw B 4,2 X 9,5		4	

Pos	Part Number	Name	Remarks	Qty	Model	Pos	Part Number	Name	Remarks	Qty	Model
16	900 151 028 02	washer B 4,3 X 12		4							
		- -- E N D -- -									

Model	Year	MG	SG	Illustration	Restrictions	Update			
944	85	8	13	813-10		187	10:48	07.04.2005	PORSCHE PET PORSCHE

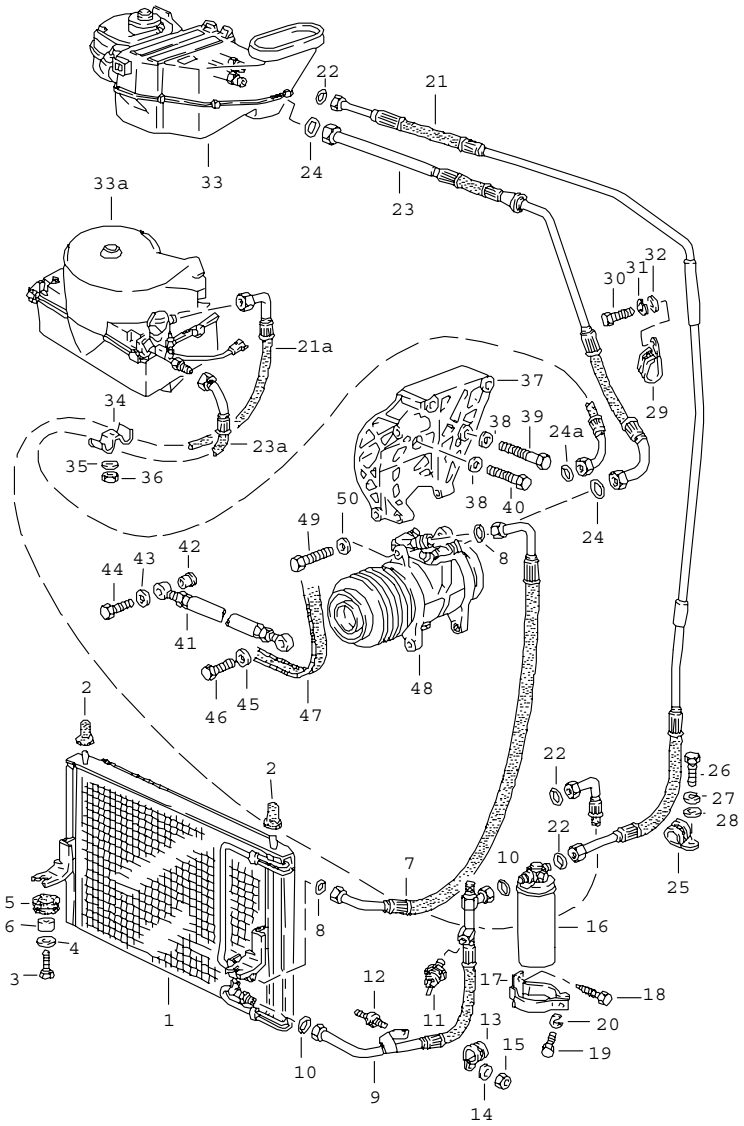

Pos	Part Number	Name	Remarks	Qty	Model
		air conditioner			M 573
1	944 573 011 01	condenser		1	
2	944 573 457 00	rubber sleeve		2	
3	N 010 217 9	hexagon-head bolt M 6 X 20		2	
4	N 011 612 3	washer R 6,6		2	
5	056 129 669 B	grommet		2	
6	052 109 135	spacer sleeve		2	
7	944 573 097 01	refrigerant line		1	
8	999 707 250 40	o-ring		2	
9	944 573 095 01	refrigerant line		1	
10	999 707 247 40	o-ring		2	
11	A 959 613 137 00	low pressure switch		1	
11	959 613 137 00	low pressure switch		1	
12	928 110 191 00	bonded rubber buffer M 5		1	
12	928 110 191 00	bonded rubber buffer M 6		1	
13	N 020 647 1	clamp RSGU 1100 23/15		1	
14	N 011 524 7	washer A 6,4		1	
15	900 076 010 02	hexagon nut M 6		1	
16	944 573 943 00	desiccator		1	
17	944 573 081 00	support		1	
18	N 013 884 5	tapping screw B 4,8 X 13		2	
19	N 010 264 4	hexagon-head bolt M 5 X 20		1	
20	N 012 005 3	lock ring B 5		1	
21	944 573 093 01	refrigerant line	/LL	1	

Pos	Part Number	Name	Remarks	Qty	Model
21A	478 820 735	refrigerant line	/RL	1	
22	999 707 247 40	o-ring		2	
23	944 573 091 01	refrigerant line	/LL	1	
23A	945 573 091 00	refrigerant line	/RL	1	
24	999 707 251 40	o-ring	/LL	2	
24A	478 820 731	o-ring	/RL	1	
25	999 511 066 02	clamp B 15 X 18		1	
26	N 010 215 13	hexagon-head bolt M 6 X 15		1	
27	N 012 006 4	lock ring B 6		1	
28	N 011 524 7	washer A 6,4		1	
29	E 999 511 136 02	clamp RSGU 18-25/15	/LL	1	
30	N 010 217 9	hexagon-head bolt M 6 X 20	/LL	1	
31	N 012 006 4	lock ring B6	/LL	1	
32	N 011 524 7	washer B 6	/LL	1	
33	477 820 002 A	air conditioner	/LL	1	
33A	E 478 820 017 A	evaporator	/RL	1	
34	477 820 757	clip	/RL	2	
35	N 012 006 4	lock ring B6	/RL	2	
36	900 076 010 02	hexagon nut M6	/RL	2	
37	944 126 017 04	bracket		1	
38	N 011 527 12	washer A 10,5		4	
39	N 010 480 3	hexagon-head bolt M 10 X 80		3	
40	N 010 450 5	hexagon-head bolt M 10 X 50		1	
41	944 126 021 03	strut		1	
42	944 126 127 01	bush		1	
43	900 025 007 02	washer A 8,4		1	
44	N 010 332 4	hexagon-head bolt M 8 X 32		1	
45	900 025 008 09	washer A 10,5		1	
46	N 040 125 1	hexagon-head bolt M 10 X 1,25 X 30		1	
47	999 192 206 50	v-belt K 5 X 1005		1	
48	944 126 007 02	compressor		1	
49	900 082 088 02	hexagon-head bolt M 10 X 1,25 X 50		2	
50	N 011 527 12	washer A 10,5		2	
-	944 126 125 00	sleeve		1	

- -- E N D -- -

Model	Year	MG	SG	Illustration	Restrictions	Update			
944	85	8	13	813-15		187	10:48	07.04.2005	PORSCHE PET PORSCHE

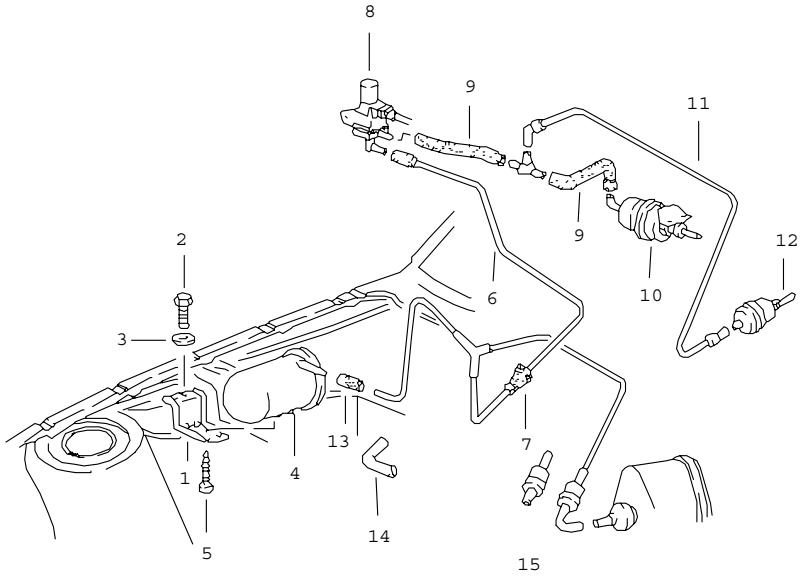

Pos	Part Number	Name	Remarks	Qty	Model
		vacuum control			M 573
1	944 573 465 00	support	/LL -83	1	
(1)	945 573 465 00	support	/RL -83	1	
(1)	944 573 465 01	support	84-	1	
2	N 010 215 13	hexagon-head bolt M 6 X 15	-83	2	
3	N 011 524 7	washer A 6,4	-83	2	
-	900 076 010 02	hexagon nut M 6	84-	2	
-	N 012 006 4	lock ring B 6	84-	2	
4	945 573 808 00	vacuum reservoir		1	
5	N 090 186 1	tapping screw B 4,8 X 13		1	
6	944 573 099 00	vacuum line F >>94CN4 02411	/LL	1	
(6)	944 573 099 02	vacuum line F 94CN4 02412>>	/LL	1	
(6)	945 573 099 00	vacuum line F >>94CN4 02411	/RL	1	
(6)	945 573 099 01	vacuum line F 94CN4 02412>>	/RL -83	1	
(6)	945 573 099 02	vacuum line	/RL 84-	1	
7	477 819 849	grommet		1	
8	944 573 165 00	solenoid valve	/LL	1	
(8)	928 573 691 02	solenoid valve	/RL	1	
9	477 820 557	vacuum line	/LL	1	
10	477 820 545	vacuum unit	/LL	1	
11	944 573 101 00	vacuum line	/LL	1	
12	944 573 053 00	vacuum unit		1	
13	928 574 747 03	connecting piece	-83	1	
14	928 574 717 02	hose	84-	1	
15	928 537 361 02	valve		1	

Model	Year	MG	SG	Illustration	Restrictions	Update			
944	85	8	13	813-15		187	10:48	07.04.2005	PORSCHE PET PORSCHE

Pos	Part Number	Name	Remarks	Qty	Model	Pos	Part Number	Name	Remarks	Qty	Model
		- -- E N D -- -									

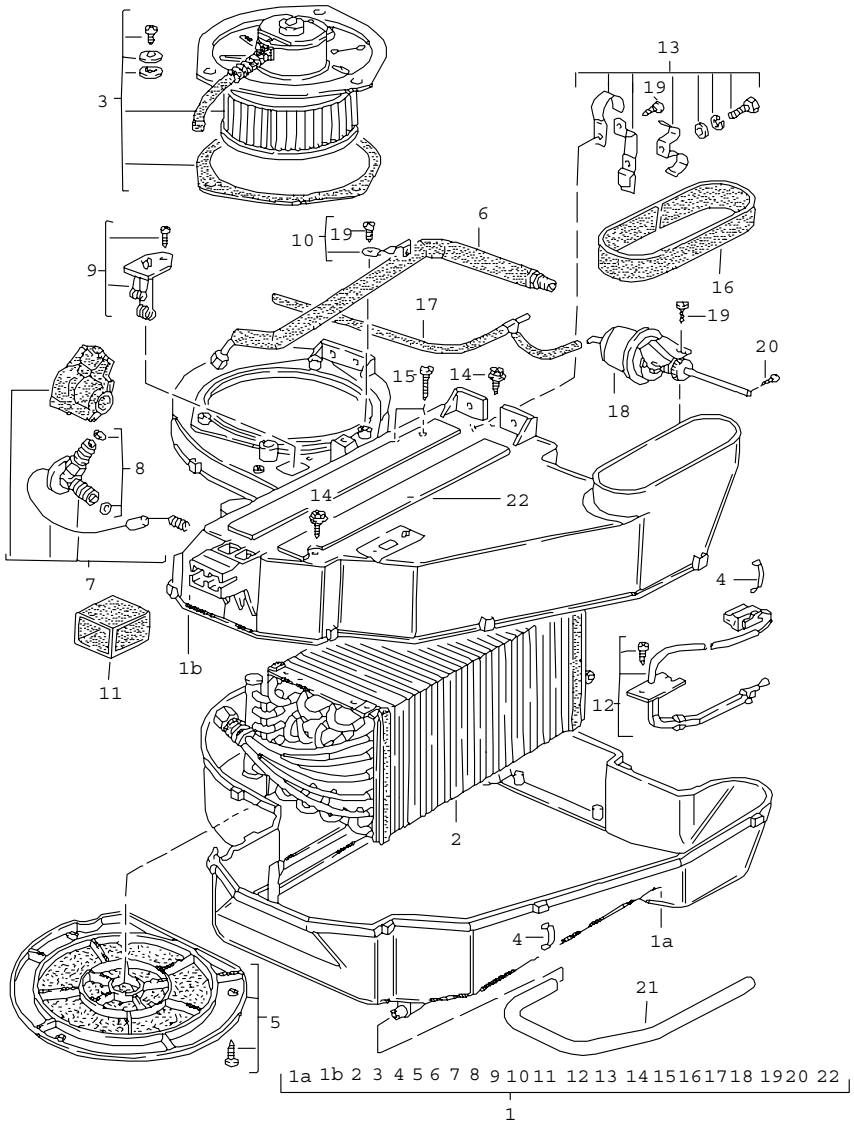

Pos	Part Number	Name	Remarks	Qty	Model
		air conditioner left-hand drive			M 573
1	477 820 002 A	air conditioner		1	
1A	477 820 421 A	housing lower part		1	
1B	477 820 420 A	housing upper part		1	
2	477 820 903	evaporator		1	
3	477 820 905	blower		1	
4	477 820 449	clamp		11	
5	477 820 907	air cleaner		1	
6	477 820 459	pressure line		1	
7	477 820 909	expansion valve		1	
8	477 820 911	set of o-rings		1	
9	477 820 915	resistor		1	
10	E 477 820 917	retaining bow		1	
11	477 820 447 A	rubber boot		1	
12	477 820 901	temperature sensor		1	
13	E 477 820 919	clamp		1	
14	E 477 820 437	tapping screw		2	
15	E 477 820 435 A	tapping screw		2	
16	477 820 507 A	insulator		1	
17	477 820 557	vacuum line		1	
18	477 820 545	vacuum unit		1	
19	E 477 820 435 D	tapping screw		2	
20	E 477 820 555	pan-head screw		2	
21	477 820 523	water drain hose		1	
22	477 820 447	gasket		2	
		- -- E N D -- -			

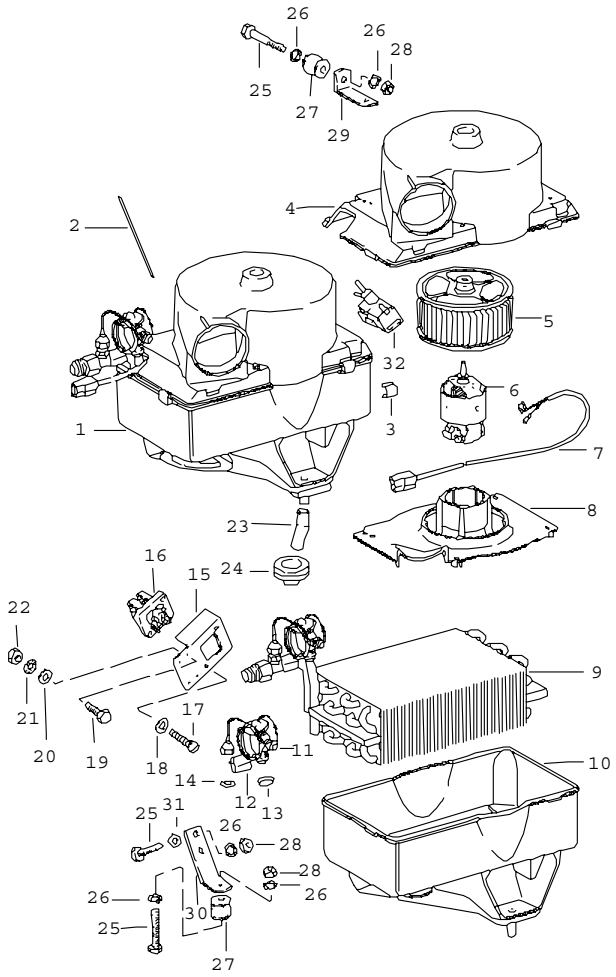

Pos	Part Number	Name	Remarks	Qty	Model
		air conditioner right-hand drive			+M 573
1	E 478 820 017 A	evaporator with housing		1	
2	901 573 903 00	guide tube for temperature switch		1	
3	901 573 904 00	tensioning spring		4	
4	944 573 905 00	housing upper part		1	
5	901 573 906 00	fan		1	
6	901 624 901 00	electric motor		1	
7	E 901 612 084 00	wiring harness		1	
8	911 573 323 00	engine support		1	
9	901 573 907 00	evaporator		1	
10	478 898 117	housing lower part		1	
11	901 573 915 00	expansion valve		1	
12	901 573 914 00	clip		1	
13	901 573 147 00	gasket 3/4"		1	
14	901 573 916 00	gasket 7/16"		1	
15	478 820 209	bracket		1	
16	911 618 151 00	thermo bi-metal switch		1	
17	900 146 011 02	oval-head screw AM 4 X 10		2	
18	N 012 224 3	spring washer A 4		2	
19	N 010 207 6	hexagon-head bolt M 5 X 12		2	
20	900 025 003 02	washer A 5,3		2	
21	N 012 130 2	shake-proof washer A 5,3		2	

Pos	Part Number	Name	Remarks	Qty	Model	Pos	Part Number	Name	Remarks	Qty	Model
22	N 011 005 14	hexagon nut M 5		2							
-	N 020 363 1	hose 15 X 2,5		*							
23	-	70 MM		1							
24	901 573 143 00	rubber sleeve		1							
25	N 010 210 13	hexagon-head bolt M 6 X 10		4							
26	N 012 006 4	lock ring B 6		6							
27	999 703 302 00	silentbloc		2							
28	900 076 010 02	hexagon nut M 6		4							
29	478 820 201	angle		1							
30	478 820 207	angle		1							
31	N 011 524 7	washer A 6,4		2							
32	928 573 691 02	solenoid valve		1							
		- -- E N D -- -									

Model	Year	MG	SG	Illustration	Restrictions	Update	10:49	07.04.2005	PORSCHE PET PORSCHE
944	85	8	13	813-30		187			

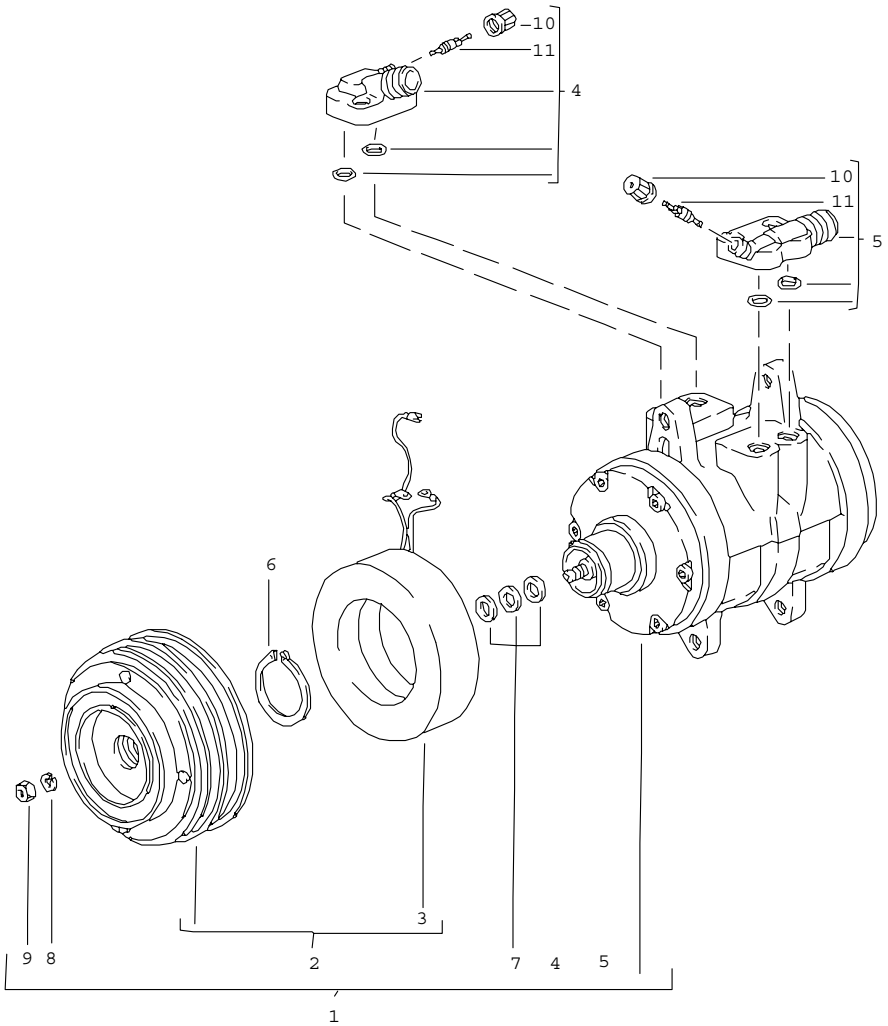

Pos	Part Number	Name	Remarks	Qty	Model
		compressor			+M 573
1	944 126 007 02	compressor		1	
2	944 126 923 00	clutch		1	
3	928 126 925 00	solenoid coil		1	
4	944 126 939 00	pressure valve		1	
5	477 298 837	suction valve		1	
6	E 477 298 843	circlip		1	
7	477 298 829	spacer 0,1 MM		X	
(7)	477 298 829 A	spacer 0,2 MM		X	
(7)	477 298 829 B	spacer 0,5 MM		X	
(7)	477 298 829 C	spacer 0,8 MM		X	
(7)	477 298 829 B	spacer 1,0 MM		X	
8	900 027 015 02	lock ring B 8		1	
9	N 011 008 8	hexagon nut M 8		1	
10	928 573 909 02	cap		2	
11	928 573 908 03	valve insert		2	
		- -- E N D -- -			

Model	Year	MG	SG	Illustration	Restrictions	Update		
944	85	8	98	REP		187	9:44	13.04.2005

Pos	Part Number	Name	Remarks	Qty	Model
		repair kits			
>>	> 477 800 377 B	set of locks 1 set for door lock ignition starter switch rear lid lock fuel tank cap comprising:		1	
		rear lid lock		1	
		lock cylinder for door handle		2	
		lock cylinder for ignition starter switch		1	
		lock cylinder for fuel tank cap		1	
		key S 91		2	
		PROFIL VB use also:			
-	944 201 061 01	fuel tank cap		1	
>>	> 477 898 011 A	sealing set for windscreen		1	
>>	> 477 898 025	installation set door mirror electrically adjustable heatable plan not for comprising:	/LL/L	1	(J)
-	911 731 043 00	mirror housing		1	
-	928 731 141 06	mirror base		1	
-	999 143 003 02	hexagon-head bolt M 5 X 10		3	
-	911 731 027 02	frame with transmission		1	
-	911 731 035 08	mirror glass plan		1	
-	999 703 128 40	grommet for mirror glass		3	
-	477 831 139 C	reinforcement		1	
-	928 531 235 03	threaded piece		1	

Model	Year	MG	SG	Illustration	Restrictions	Update		
944	85	8	98	REP		187	9:44	13.04.2005

Pos	Part Number	Name	Remarks	Qty	Model
-	N 013 295 1	tensioning sleeve		1	
-	944 731 505 00	desk pad		1	
-	911 731 257 02	guide tube		1	
-	911 731 345 02	adjusting washer lower		1	
-	911 731 347 00	adjusting washer upper		1	
-	911 731 029 01	compression spring		1	
-	900 186 042 02	pan-head screw M 5 X 40		1	
-	E 477 867 181	mounting piece		1	
-	N 014 090 5	tapping screw 3,9 X 13		2	
-	999 507 071 00	speed nut		2	
-	911 613 115 00	switch		1	
-	928 555 463 02	threaded bush		1	
-	928 613 462 00	knob		1	
-	477 971 111	harness		1	
-	477 971 115 A	harness		1	
-	477 971 910	bellows		1	
-	803 971 979	plug socket		1	
>>	> 477 898 026	installation set door mirror electrically adjustable heatable plan comprising:	/LL/R	1	
-	911 731 044 00	mirror housing		1	
-	928 731 143 08	mirror base		1	
-	999 143 003 02	hexagon-head bolt M 5 X 10		3	
-	911 731 028 02	frame with transmission		1	
-	911 731 035 08	mirror glass plan		1	

Model	Year	MG	SG	Illustration	Restrictions	Update		
944	85	8	98	REP		187	9:44	13.04.2005

Pos	Part Number	Name	Remarks	Qty	Model
-	999 703 128 40	grommet for mirror glass		3	
-	477 831 140 C	reinforcement		1	
-	928 531 235 03	threaded piece		1	
-	N 013 295 1	tensioning sleeve		1	
-	944 731 508 00	desk pad		1	
-	911 731 257 02	guide tube		1	
-	911 731 345 02	adjusting washer lower		1	
-	911 731 347 00	adjusting washer upper		1	
-	911 731 029 01	compression spring		1	
-	900 186 042 02	pan-head screw M 5 X 40		1	
-	E 477 867 181	mounting piece		1	
-	N 014 090 5	tapping screw 3,9 X 13		2	
-	999 507 071 00	speed nut		2	
-	911 613 115 00	switch		1	
-	928 555 463 02	threaded bush		1	
-	928 613 462 00	knob		1	
-	477 971 113	harness		1	
-	477 971 115	harness		1	
-	477 971 910	bellows		1	
-	477 955 703	rocker switch		1	
-	803 971 979	plug socket 7-pole		1	
>>	> 944 501 941 00	repair kit blind rivet comprising: blind rivet blind rivet blind rivet assembly sleeve		1 10 5 5 1	
>>	> 931 559 901 00	set of moldings moulding comprising:		1	M 418

Model	Year	MG	SG	Illustration	Restrictions	Update		
944	85	8	98	REP		187	9:44	13.04.2005

Pos	Part Number	Name	Remarks	Qty	Model
-	931 559 137 00	moulding wing	/V	2	
-	931 559 133 00	moulding door	/L	1	
-	931 559 134 00	moulding door	/R	1	
-	931 559 141 00	moulding side section	/L	1	
-	931 559 142 00	moulding side section use also:	/R	1	
-	AMV 176 000 05	adhesive sealing compound		1	
>>	> 944 573 901 00	air conditioner for subsequent installat. use also:	/LL	1	
-	944 573 099 00	vacuum line F >>94CN4 02411		1	
-	944 573 099 02	vacuum line F 94CN4 02412>>		1	
-	477 820 412	knee protection trim		1	
	05T	black	-82		
	21S	brown	-82		
	1DB	black	83-		
	4RB	brown	83-		
		when required order also:			
-	477 971 196 CB	harness for centre console		1	
-	944 615 113 01	relay		2	
-	141 951 253 B	relay		1	
-	171 959 141	relay		1	
-	477 971 561 B	harness		1	
		- -- E N D -- -			

Model	Year	MG	SG	Illustration	Restrictions	Update				
944	85	9	01	901-00		187	10:49	07.04.2005	PORSCHE	PET	PORSCHE

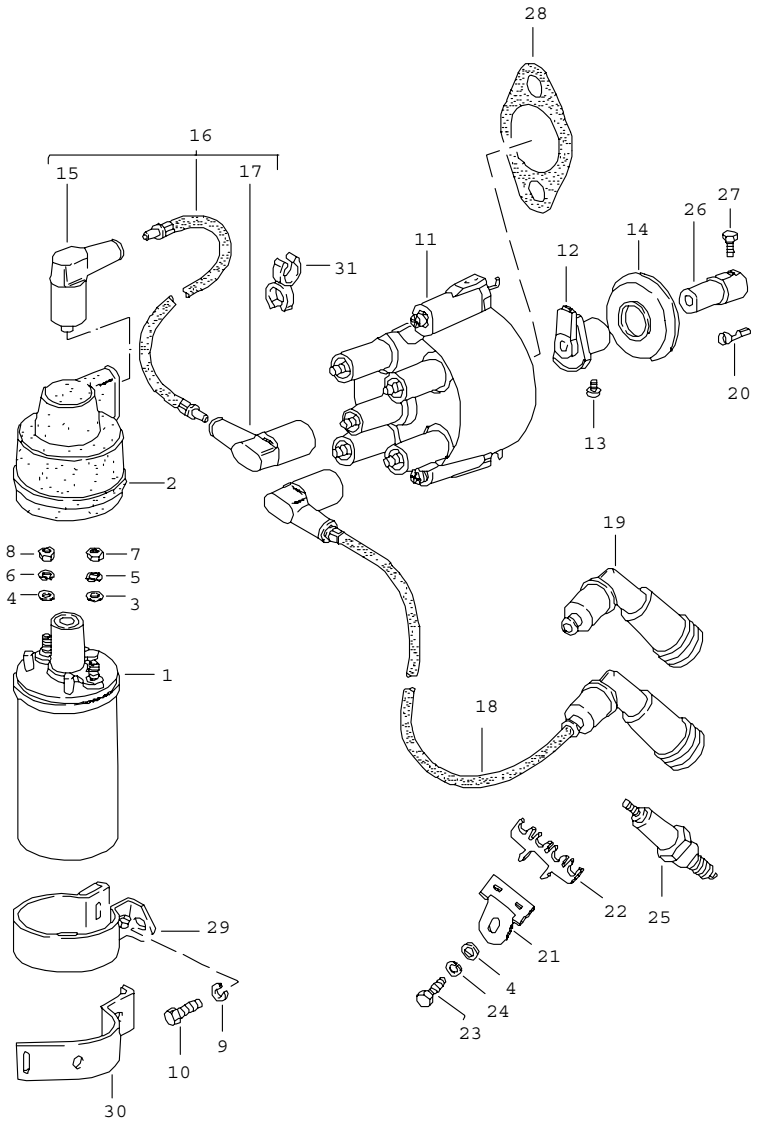

Pos	Part Number	Name	Remarks	Qty	Model
		engine electr. equipment 1			
1	944 602 115 00	ignition coil		1	
2	944 602 801 00	protection cap		1	
3	900 025 003 02	washer A 5,3		1	
4	N 011 524 7	washer A 6,4		1	
5	N 012 005 3	lock ring B 5		1	
6	N 012 006 4	lock ring B 6		1	
7	N 011 005 14	hexagon nut M 5		1	
8	900 076 010 02	hexagon nut M 6		1	
9	900 025 007 02	washer A 8,4		2	
10	N 014 706 7	pan-head screw M 8 X 12		2	
11	944 602 251 00	distributor cap		1	
-	944 602 901 00	rotor comprising: POS. 12, 13, 26		1	
12	-	rotor		1	
13	-	pan-head screw		1	
14	944 602 803 00	dust cover		1	
15	944 609 131 00	ignition coil plug		1	
16	944 609 017 01	ignition lead		1	
17	944 609 133 00	distributor plug		5	
18	944 609 015 19	ignition lead cylinder 1		1	
(18)	944 609 015 20	ignition lead cylinder 2		1	
(18)	944 609 015 21	ignition lead cyl. 3		1	

Pos	Part Number	Name	Remarks	Qty	Model
(18)	944 609 015 22	ignition lead cyl. 4		1	
19	928 609 105 03	ignition cable socket		4	
20	911 609 310 00	cable screw		X	
21	944 609 217 00	support ignition lead		1	
22	052 905 471 A	support ignition lead		4	
23	999 072 005 09	hexagon-head bolt M 6 X 12		1	
24	N 012 226 5	spring washer B 6		1	
25	999 170 156 90	spark plug WR 7 DC - bosch -		4	
26	-	connecting piece		1	
27	999 217 008 02	hexagon-head bolt M 5 X 10		1	
28	944 602 257 00	sealing sleeve		1	
29	944 602 117 00	clamp		1	
30	944 602 294 00	clamping bow		1	
31	944 609 227 00	support ignition lead		1	
		- -- E N D -- -			

Model	Year	MG	SG	Illustration	Restrictions	Update				
944	85	9	01	901-05		187	10:50	07.04.2005	PORSCHE	PET	PORSCHE

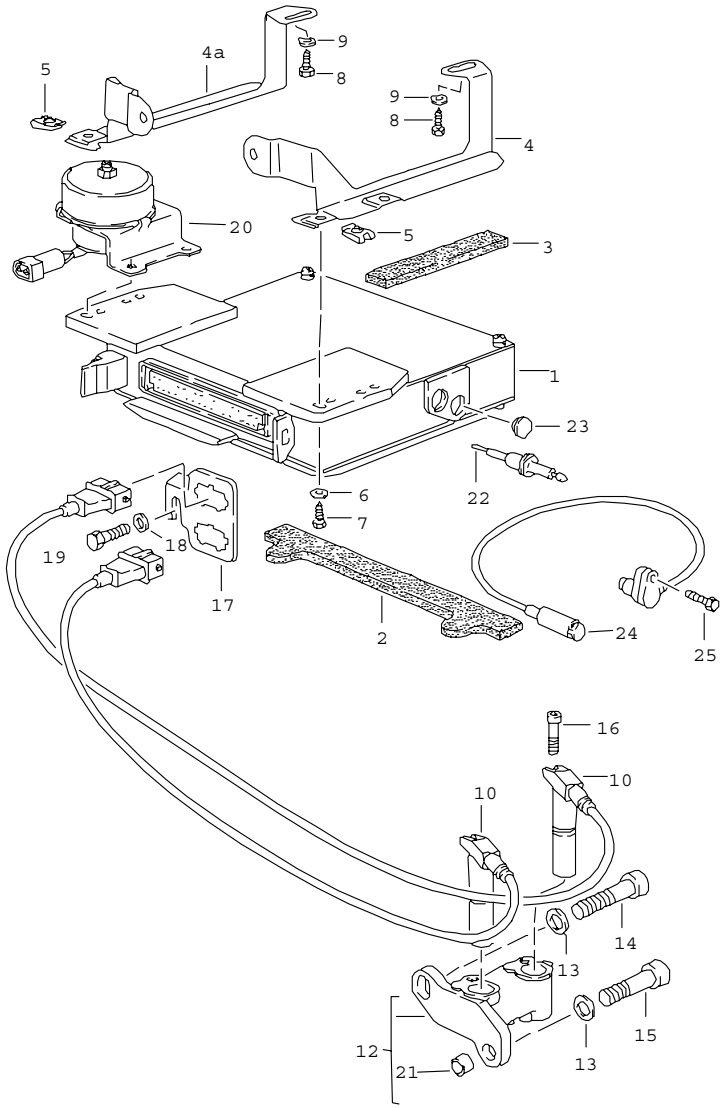

Pos	Part Number	Name	Remarks	Qty	Model
		electr. equipment-engine 2			
1	> 944 618 111 00	control unit DME		1	
(1)	> 944 618 111 00	control unit DME	82	1	(CH)
(1)	> 944 618 111 02	control unit DME	83-	1	(CH)
(1)	> 944 618 111 02	control unit DME		1	(S),(AUS) (HK),(NZ)
1	944 618 111 01	control unit DME		1	(J)
(1)	> 944 618 111 03	control unit DME		1	(F),(GB),(B) (GR),(L),(I) (E),(P)
2	944 618 119 00	plastic foam strip		1	
3	944 618 120 00	plastic foam strip		1	
4	944 618 141 00	bracket	/L	1	
4A	944 618 142 00	bracket	/R	1	
5	N 901 561 01	speed nut		4	
6	900 025 003 02	washer A 5,3		4	
7	900 187 004 02	hexagon-head tapping screw B 4,8 X 19		4	
8	N 013 884 5	tapping screw B 4,8 X 13	/LL	2	
9	N 012 225 2	spring washer B 5	/LL	2	
10	944 606 115 00	pulse sender		2	
12	944 101 031 03	support		1	
13	900 025 007 02	washer A 8,4		2	
14	N 014 726 3	pan-head screw M 8 X 30		1	
15	N 014 725 2	pan-head screw M 8 X 25		1	
16	999 217 026 02	locking screw M 6 X 16			

Pos	Part Number	Name	Remarks	Qty	Model
17	944 612 151 00	support		1	
18	N 011 524 7	washer A 6,4		1	
19	N 010 215 13	hexagon-head bolt M 6 X 15		1	
20	944 606 051 00	box		1	(J)
21	900 197 047 08	tensioning sleeve		1	
22	944 618 940 00	adjusting key		1	
23	944 606 935 00	cap		1	
24	E 911 606 108 00	timing mark sender	84-	1	
25	900 067 089 02	pan-head screw M 6X25		1	
		- -- E N D -- -			

Model	Year	MG	SG	Illustration	Restrictions	Update	10:50	07.04.2005	PORSCHE PET PORSCHE
944	85	9	02	902-00		187			

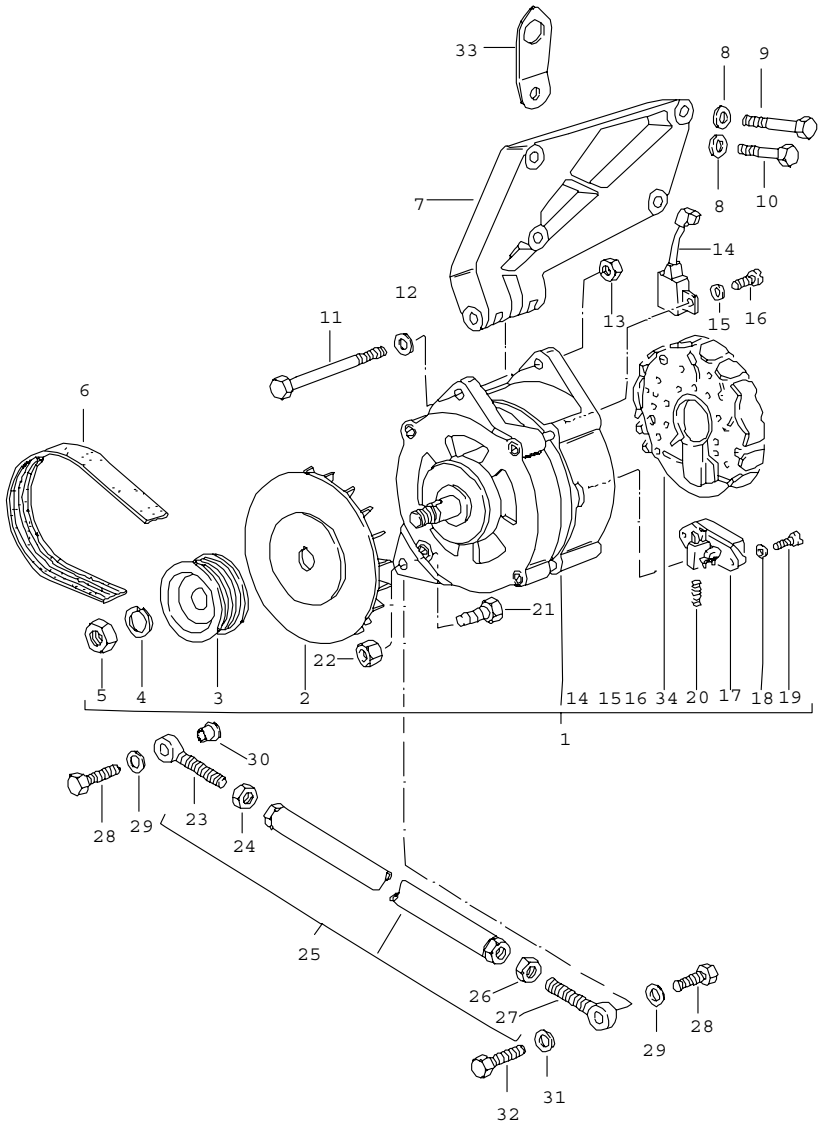

Pos	Part Number	Name	Remarks	Qty	Model
		generator with mounting parts			
1	E 944 603 108 01	generator		1	
2	063 903 171	fan		1	
3	944 603 121 06	pulley		1	
4	N 012 016 1	lock ring A 14		1	
5	N 011 163 3	hexagon nut M 14 X 1,5		1	
6	999 192 204 50	poly-rib belt K 5 X 736		1	
(6)	999 192 206 50	poly-rib belt K 5 X 1005		1	M 573
7	944 603 134 01	bracket		1	
(7)	944 126 123 02	bracket		1	M 573
-	944 126 125 00	sleeve		1	
8	N 011 527 12	washer A 10,5		4	
9	N 010 470 7	hexagon-head bolt M 10 X 70		4	
(9)	N 010 480 3	hexagon-head bolt M 10 X 80		3	M 573
10	N 010 450 5	hexagon-head bolt M 10 X 50		1	M 573
11	900 074 052 02	screw M 8 X 130		1	
11	900 025 007 02	washer A 8,4		1	
13	900 910 022 09	lock nut VM 8		1	
14	944 603 143 00	condenser		1	
15	N 012 226 5	spring washer B 6		1	
16	N 010 710 8	pan-head screw AM 6 X 10		1	
(17)	928 603 142 00	regulator		1	

Pos	Part Number	Name	Remarks	Qty	Model
18	N 012 004 2	lock ring B 4		2	
19	N 014 125 1	oval-head screw AM 4 X 18		2	
20	059 903 519	compression spring		1	
21	N 010 340 6	hexagon-head bolt M 8 X 40		1	M 573
22	900 910 022 09	lock nut VM 8		1	M 573
23	900 037 016 02	eye screw		1	
(23)	900 037 018 02	eye screw		1	M 573
24	N 011 008 24	hexagon nut M 8 L		1	
(24)	900 076 033 02	hexagon nut M 10 L		1	M 573
25	944 603 011 01	strut		1	
(25)	944 126 021 03	strut		1	M 573
26	900 076 025 02	hexagon nut M 8		1	
(26)	N 011 010 6	hexagon nut M 10		1	M 573
27	900 037 019 02	eye screw		1	
(27)	900 037 017 02	eye screw		1	M 573
28	N 010 233 6	hexagon-head bolt M 8 X 28		2	
(28)	N 010 332 4	hexagon-head bolt M 8 X 32		1	M 573
29	900 025 007 02	washer		2	
30	944 126 127 01	bush		1	M 573
31	900 025 008 09	washer A 10,5		1	M 573
32	N 040 125 1	hexagon-head bolt M 10 X 1,25 X 30		1	M 573
33	944 101 411 02	bracket for transportation		1	
34	944 603 901 00	diode plate		1	

- -- E N D -- -

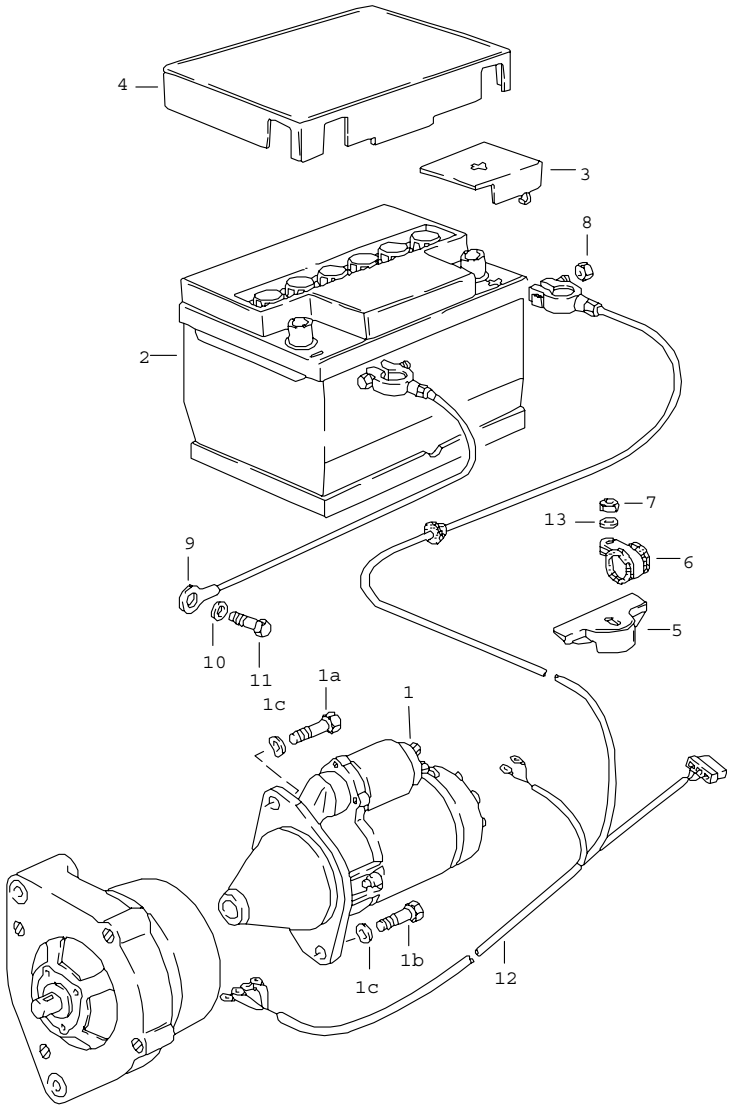

Pos	Part Number	Name	Remarks	Qty	Model
		starter battery harnesses			
1	951 604 101 00	starter 1,1 KW		1	
1A	N 010 491 1	hexagon-head bolt M 12 X 50		1	
1B	N 040 253 1	hexagon-head bolt M 12 X 35		1	
1C	900 028 014 02	spring washer B 12		2	
2	944 611 101 00	battery 50 AH	/LL	1	
2	945 611 101 00	battery 50 AH	/RL	1	
2	477 915 107 A	battery 63 AH		1	
3	477 915 429	pole covering	/RL	1	
4	281 915 411 F	battery cover for battery 50 AH		1 1	
(4)	477 915 411 A	battery cover for battery 63 AH		1	
5	914 611 233 10	tension terminal		1	
6	N 020 607 1	clamp B 20 X 20 GI		1	
7	477 915 489	hexagon nut M 8		1	
8	900 076 010 02	hexagon nut M 6		2	
9	477 971 221	ground strap		1	
10	900 027 015 02	lock ring B 8		1	
11	N 010 239 11	hexagon-head bolt M 8 X 18		1	

Pos	Part Number	Name	Remarks	Qty	Model	Pos	Part Number	Name	Remarks	Qty	Model
12	944 612 015 01	wiring harness starter generator	/LL	1							
(12)	945 612 015 00	wiring harness starter generator	/RL	1							
		- -- E N D -- -									

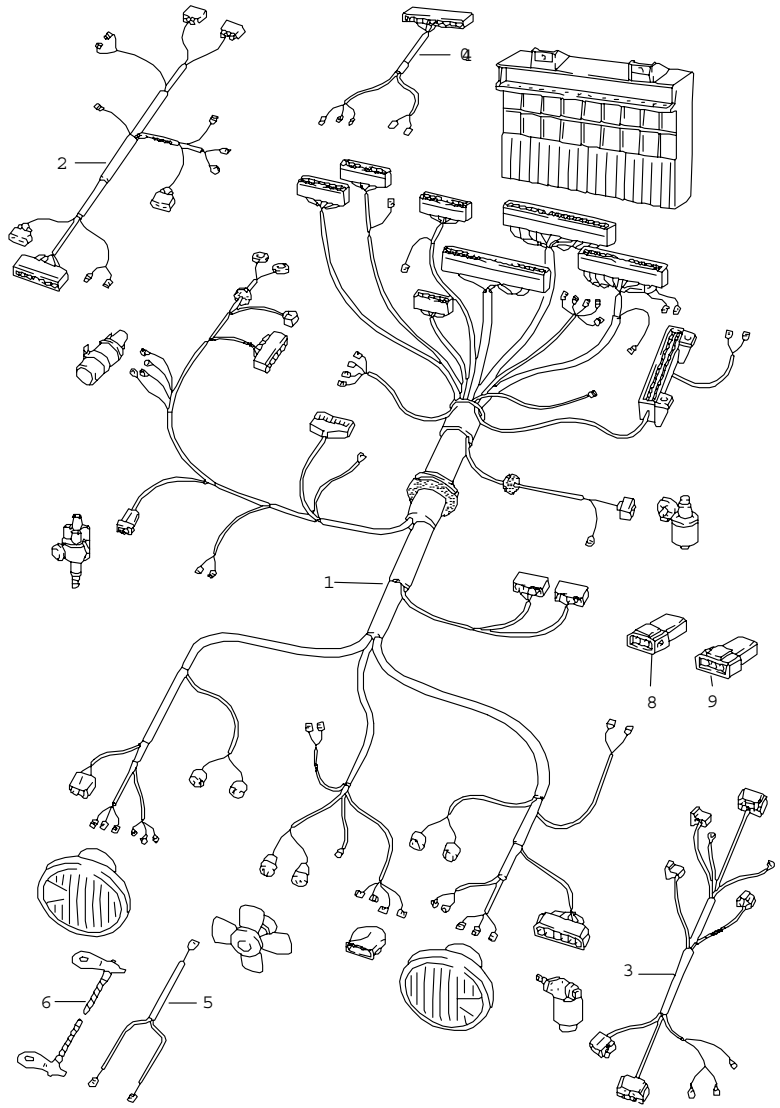

Pos	Part Number	Name	Remarks	Qty	Model
		harnesses engine compartment - dme - headlight washer system			
(1)	944 612 001 07	wiring harness engine compartment F >>94DN4 01549	/LL -83	1	
(1)	944 612 001 13	wiring harness engine compartment F 94DN4 01550>>	/LL -83	1	
(1)	944 612 001 17	wiring harness engine compartment	/LL 84	1	
(1)	944 612 001 24	wiring harness engine compartment	/LL 85-	1	
(1)	944 612 001 09	wiring harness engine compartment F >>94DN4 01549	/LL -83	1	M 573
(1)	944 612 001 14	wiring harness engine compartment F 94DN4 01550>>	/LL -83	1	M 573
(1)	944 612 001 18	wiring harness engine compartment	/LL 84	1	M 573
(1)	944 612 001 25	wiring harness engine compartment	/LL 85-	1	M 573
(1)	945 612 001 04	wiring harness engine compartment F >>94DN4 01549	/RL -83	1	
(1)	945 612 001 06	wiring harness engine compartment F 94DN4 01550>>	/RL -83	1	
(1)	945 612 001 08	wiring harness engine compartment	/RL 84	1	
(1)	945 612 001 12	wiring harness engine compartment	/RL 85-	1	
(1)	945 612 001 05	wiring harness engine compartment F >>94DN4 01549	/RL -83	1	M 573
(1)	945 612 001 07	wiring harness engine compartment F 94DN4 01550>>	/RL -83	1	M 573
(1)	945 612 001 09	wiring harness engine compartment	/RL 84	1	M 573

Pos	Part Number	Name	Remarks	Qty	Model
(1)	945 612 001 13	wiring harness engine compartment	/RL 85-	1	M 573
(1)	944 612 001 11	wiring harness engine compartment		1	(J)
(1)	944 612 001 12	wiring harness engine compartment F >>94DN4 01549		1	(J)
1	944 612 001 16	wiring harness engine compartment F 94DN4 01550>>	-83	1	(J)
(1)	944 612 001 20	wiring harness engine compartment	/LL 84	1	(J) M 215
(1)	944 612 001 27	wiring harness engine compartment	/LL 85-	1	(J) M 215
2	944 612 002 07	wiring harness - dme - see technical information GR. 2 NR. 3/85		1	
2	944 612 002 06	wiring harness - dme -		1	(J)
3	477 971 563 A	wiring harness air conditioner	/LL	1	
(3)	478 971 561 A	wiring harness air conditioner	/RL	1	
		headlight washer system			
4	477 971 205	wiring harness		1	
5	477 971 322 B	double line		1	
6	477 971 235	ground strap engine body		1	
7	171 971 999 A	terminal sleeve housing 2-pole		1	
8	171 971 999 B	terminal sleeve housing 3-pole		1	
		- -- E N D -- -			

Pos	Part Number	Name	Remarks	Qty	Model

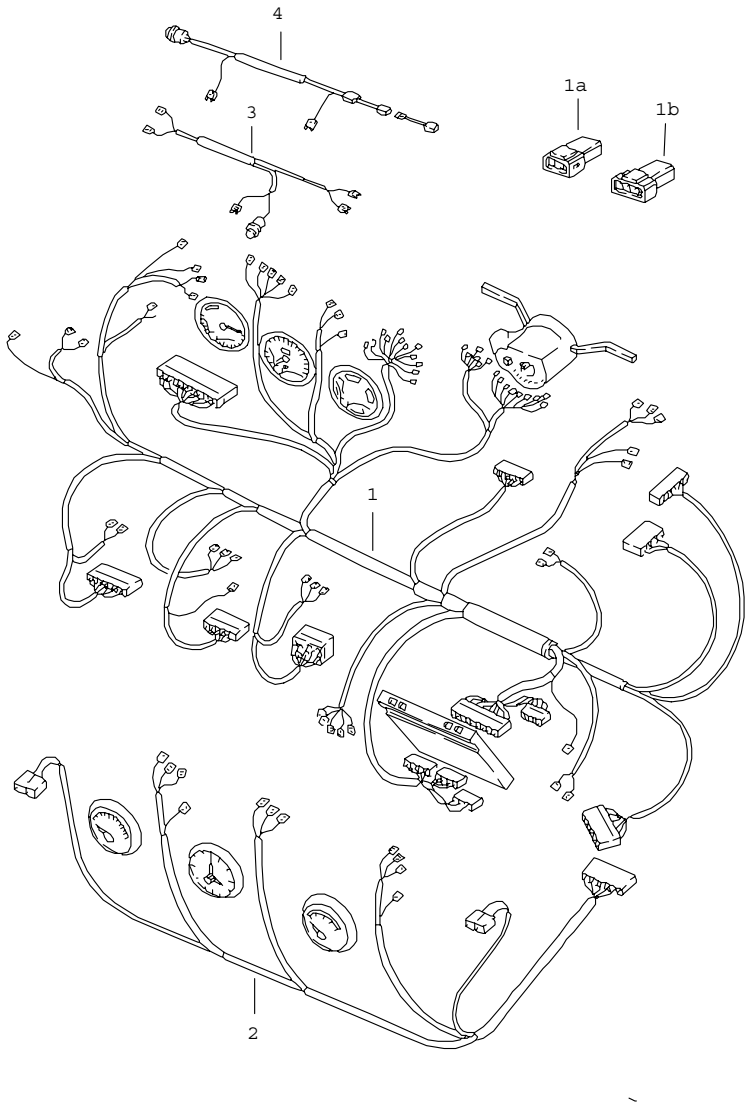

Pos	Part Number	Name	Remarks	Qty	Model
		harnesses dashboard centre console			
1	477 971 050 DF	wiring harness dashboard	/LL -83	1	
(1)	944 612 005 00	wiring harness dashboard	/LL 84-	1	
(1)	E 478 971 050 BE	wiring harness dashboard	/RL -83	1	
(1)	945 612 005 00	wiring harness dashboard	/RL 84-	1	
(1)	477 971 050 FF	wiring harness dashboard	/LL -83	1	AUT.
(1)	944 612 005 02	wiring harness dashboard	/LL 84-	1	AUT.
(1)	478 971 050 CE	wiring harness dashboard	/RL -83	1	AUT.
(1)	945 612 005 01	wiring harness dashboard	/RL 84-	1	AUT.
(1)	944 612 005 04	wiring harness dashboard		1	M 215
1A	171 971 998 A	connector housing 2-pole		1	
1B	171 971 998 B	connector housing 3-pole		1	
2	477 971 196 CB	wiring harness centre console		1	M 573
2	477 971 196 DB	wiring harness centre console		1	
3	477 971 565 C	wiring harness with diode		1	(J)
4	478 971 109 B	wiring harness additional headlamp	/RL	1	
-	944 612 121 00	wiring harness lifting roof		1	
		- -- E N D -- -			

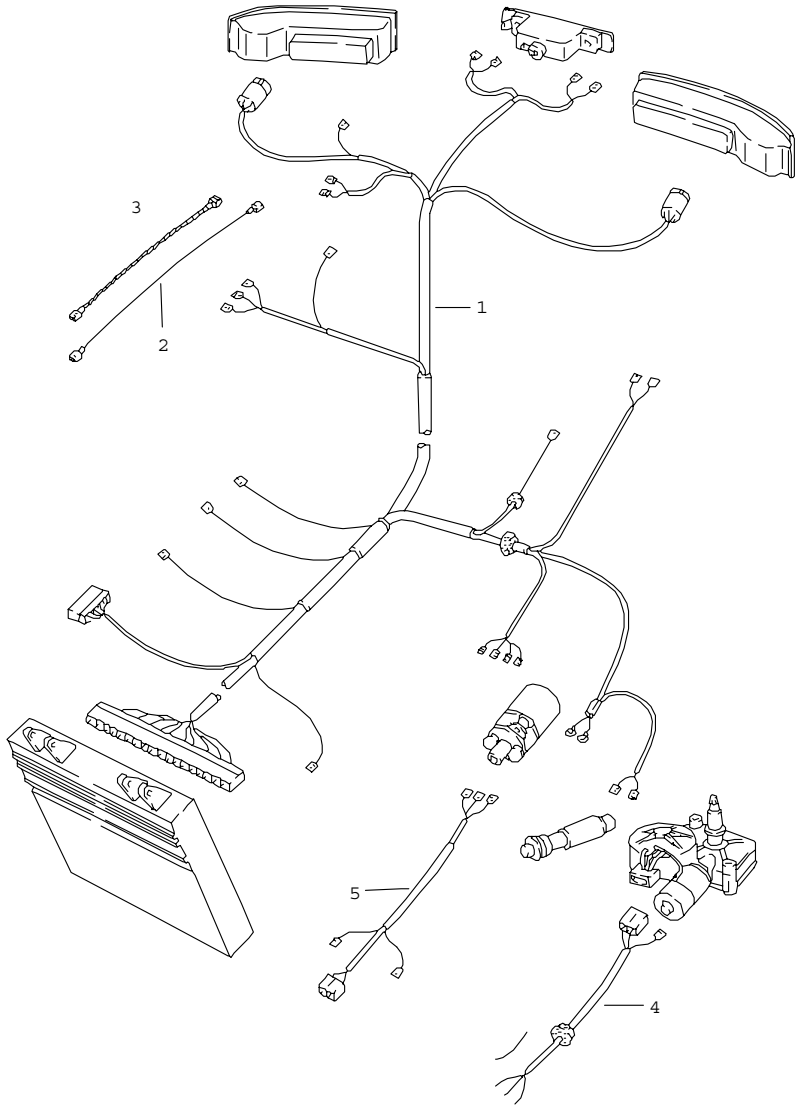

Pos	Part Number	Name	Remarks	Qty	Model
		harnesses rear end			
1	944 612 004 00	wiring harness rear end when required order also:	-83	1	
-	171 971 519 A	ground connector		1	
(1)	944 612 004 05	wiring harness rear end	84-	1	
(1)	944 612 004 01	wiring harness rear end when required order also:	-83	1	AUT.
-	171 971 519 A	ground connector		1	
(1)	944 612 004 06	wiring harness rear end	84-	1	AUT.
2	477 971 257 B	line gas-filled strut rear window		2	
3	477 971 263 B	ground strap gas-filled strut		2	
4	477 971 345	wiring harness for rear window wiper	-83	1	
(4)	477 971 345 A	wiring harness for rear window wiper	83-	1	
5	477 971 346	wiring harness switch rear window wiper		1	
		- -- E N D -- -			

Model	Year	MG	SG	Illustration	Restrictions	Update				
944	85	9	02	902-35		187	10:51	07.04.2005	PORSCHE	PET	PORSCHE

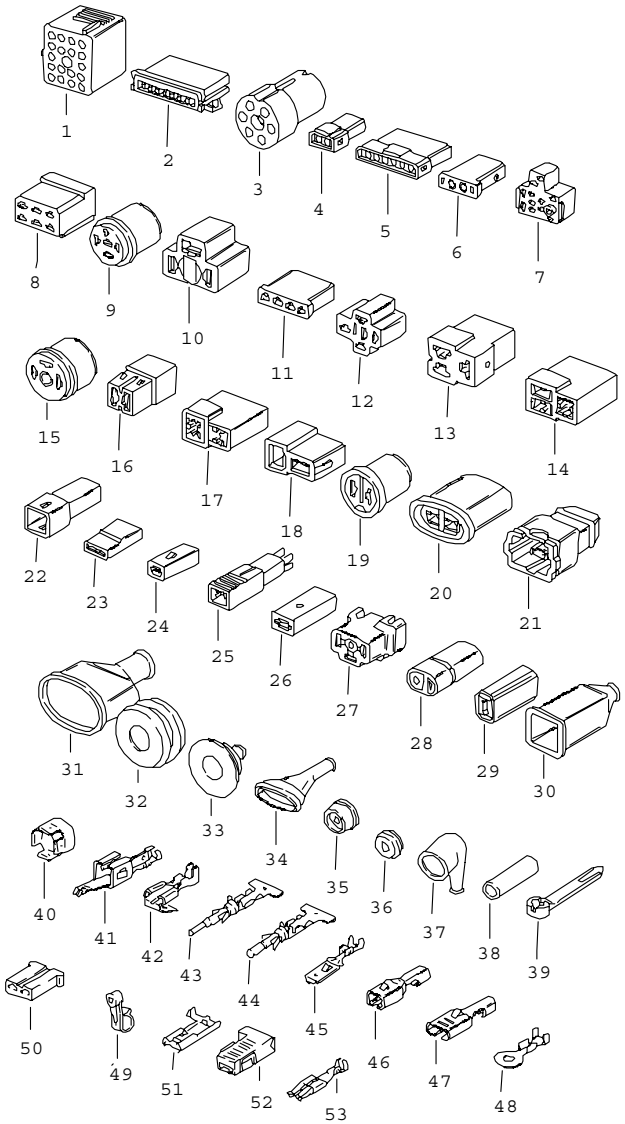

Pos	Part Number	Name	Remarks	Qty	Model
		push-on connector			
1	171 971 971	connector housing yellow 20-pole		1	
(1)	171 971 971 A	connector housing black 22-pole		1	
(1)	171 971 971 B	connector housing blue 22-pole		1	
(1)	171 971 971 C	connector housing beige 19-pole		1	
(1)	171 971 971 D	connector housing red 20-pole		1	
(1)	171 971 971 E	connector housing white 19-pole		1	
2	113 971 998 B	connector housing 8-pole		X	
3	803 971 979	plug socket 7-pole		1	
(3)	111 953 631	terminal sleeve housing 7-pole for ignition starter switch		1	
(4)	171 971 998	connector housing single pole		X	
4	171 971 998 A	connector housing 2-pole		X	
(4)	171 971 998 C	connector housing 4-pole		1	
5	171 971 998 E	connector housing 6-pole		X	
(6)	171 971 999	terminal sleeve housing single pole		X	
6	171 971 999 A	terminal sleeve housing 2-pole		X	
(6)	171 971 999 B	terminal sleeve housing 3-pole		X	

Pos	Part Number	Name	Remarks	Qty	Model
(6)	171 971 999 C	terminal sleeve housing 4-pole		X	
(6)	171 971 999 E	connector housing 6-pole		X	
7	477 971 999	terminal sleeve housing for light switch		1	
8	803 971 831	terminal sleeve housing 6-pole		1	
(8)	803 971 971	connector housing 8-pole		X	
10	914 612 327 10	connector housing 3-pole		X	
12	803 971 835 A	terminal sleeve housing 3-pole		1	
13	821 971 970	connector housing 3-pole		1	
14	821 971 975	terminal sleeve housing 3-pole		1	
15	113 945 525	terminal sleeve housing 3-pole		6	
16	815 971 989	connector housing 2-pole		X	
17	815 971 988 A	connector housing 2-pole		X	
18	815 971 989 A	connector housing 2-pole		X	
19	810 971 993	terminal sleeve housing 2-pole		X	
20	810 971 989	terminal sleeve housing 2-pole		X	
21	022 906 231 A	connector housing 2-pole		X	
(21)	171 971 934	connector housing 2-pole		X	
22	823 971 976	connector housing single pole		X	
23	825 971 990	terminal sleeve housing single pole		X	
(23)	431 971 995	terminal sleeve housing single pole		X	
24	823 971 990	terminal sleeve housing single pole		X	
26	111 971 977	plug with guide		X	
28	914 612 417 10	fuse holder		1	
29	111 971 921	protection cap for flat connector		X	
(29)	111 971 921 B	connector housing flat connector		X	
30	803 957 855 B	protective grommet for connector housing		1	
31	431 971 866	protective grommet for terminal sleeve housing		1	
32	477 971 871 B	rubber sleeve for wiring harness engine compartment		X	
33	477 971 911	protective grommet for wiring harness starter battery		1	
34	022 906 102	protection cap		1	
(34)	944 612 128 00	protection cap		X	
35	411 941 189	grommet		X	
36	477 971 909	rubber sleeve		X	
(36)	111 941 189	drain bush		X	
37	E 113 927 249	protection cap		X	
38	059 971 891	sleeve		X	
39	477 971 850 A	tie-wrap 360 X 4,5		X	
(39)	N 020 902 1	tie-wrap 120 X 6,5		X	
(39)	999 513 001 40	tie-wrap 140 X 3,6		X	

Pos	Part Number	Name	Remarks	Qty	Model
(39)	999 513 049 40	tie-wrap		X	
(39)	999 513 010 40	tie-wrap		X	
40	171 971 519 A	ground connector		1	
41	999 652 275 10	contact		X	
42	N 017 242 1	flat receptacle 6,3 X 1		X	
43	N 017 589 4	round connector 1,6 X 1		X	
(43)	N 017 586 2	round connector 2,1 X 1		X	
44	N 017 593 4	cylindrical connector 1,6 X 1		X	
(44)	N 017 592 2	cylindrical connector 1,6 X 2,5		X	
(44)	N 017 599 4	cylindrical connector with clips 3,5 X 6		X	
45	111 971 985	flat plug 6,3 X 1		X	
(45)	N 017 457 2	flat plug 2,8 X 1		X	
(45)	111 971 986	flat plug 6,3 X 2,5		X	
46	111 971 958	flat receptacle with clips 2,8 X 0,8		X	
(46)	111 971 958	flat receptacle 2,8 X 1		X	
(46)	111 971 958	flat receptacle 2,8 X 1		X	
(46)	N 017 243 1	flat receptacle with clips 2,8 X 1,5		X	
47	111 971 959	flat receptacle 6,3 X 0,8		X	
(47)	111 971 959	flat receptacle 6,3 X 1		X	
(47)	999 652 106 02	flat receptacle 6,3 X 1		X	
(47)	N 017 491 8	flat receptacle with clips 6,3 X 2,5		X	
(47)	N 017 491 8	flat receptacle 6,3 X 2,5		X	
(47)	N 017 453 1	flat receptacle with clips 7,7 X 2,5		X	
(47)	N 017 245 1	flat receptacle with clips 7,7 X 10		X	
48	N 017 518 2	cable shoe		X	
(48)	N 017 516 2	cable shoe		X	
(48)	N 017 515 4	cable shoe		X	
(48)	N 017 505 4	cable shoe		X	
49	477 971 853	cable clip	82-	X	
50	171 906 231	connector housing 2-pole		X	
51	N 017 498 2	flat receptacle 6,3 X 0,8		X	
52	211 971 921	protection cap		X	
53	N 903 353 03	contact spring		X	

- -- E N D -- -

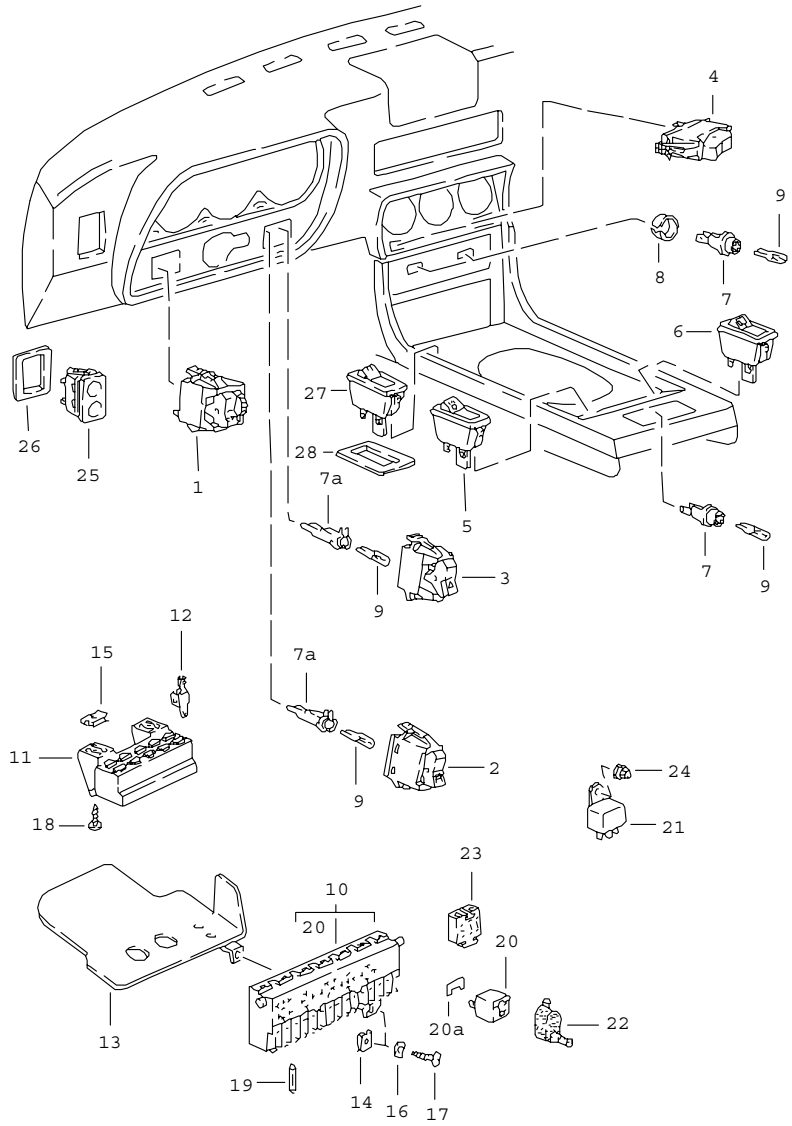

Pos	Part Number	Name	Remarks	Qty	Model
		switch fuse box relay			
1	477 941 531 F	light switch		1	
2	477 959 623	switch rear window heating		1	
3	477 953 235 A	emergency light switch		1	
4	944 613 110 00	switch for rear fog light		1	
(4)	944 613 112 00	switch fog headlamp rear fog light		1	
5	477 941 563 A	switch additional headlamp		1	(GB)
(5)	911 613 113 00	changeover switch		X	
6	477 955 701	rocker switch rear window wiper		1	
(6)	477 955 702	tip switch headlight washer system		1	
(6)	477 955 703	mirror changeover switch		1	
7	914 631 179 10	bulb holder		3	
7A	E 141 957 397 A	bulb holder		1	
8	477 919 333	knob holder		2	
9	900 631 132 90	bulb 12 V, 1,2 W		X	
10	477 941 813	plate		1	
11	477 937 511	fuse holder 9-pole		1	
12	999 652 275 10	contact		X	
13	E 477 941 802	cover	/LL	1	
(13)	478 941 802	cover	/RL	1	
14	N 015 438 1	speed nut B 3,5 X 16,5		1	
15	E N 045 421 1	tapping screw B 4,2		2	
16	N 011 663 1	washer B 3,7		1	

Pos	Part Number	Name	Remarks	Qty	Model
17	900 143 072 02	oval-head sheetmetal screw B 3,5 X 19		1	
18	N 013 964 4	tapping screw B 4,2 X 16		2	
19	N 017 121 1	safety fuse 8 A		X	
(19)	N 017 121 4	safety fuse 16 A		X	
(19)	N 017 121 5	safety fuse 25 A		1	
20	111 953 227 D	flasher relay		1	
(20)	141 951 253 B	relay additional headlamp electric fan rear window heating		3	
(20)	944 615 102 01	relay seat belt rear window heating	84-	1	
(20)	141 951 253 B	relay horn F >>94CN4 09209		1	
(20)	443 963 141	relay horn F 94CN4 09210>>		1	
(20)	944 615 113 01	relay air conditioner		1	
(20)	477 955 531 A	interval relay		1	
(20)	993 615 227 00	relay fuel pump		1	
-	944 615 915 01	relay see technical information GR.2 NR.3/85		1	
(20)	928 618 102 03	relay with warning indicator		1	M 215
(20)	944 615 103 00	switch unit radio lifting roof		1	
(20)	911 617 119 00	switch unit exhaust gas temperature monitoring		1	(J)
(20)	111 943 383 C	relay electric motor pop-up headlight		1	
20A	171 937 545	bridge		1	
(21)	944 615 231 00	relay fog headlamp		1	
(21)	944 615 223 00	relay fog headlamp		1	(CH),(N),(S)
22	477 971 923	protection cap relay electric motor pop-up headlight		1	
23	135 937 501 A	terminal sleeve housing		X	
24	E 999 070 007 40	cap nut	/LL	1	
25	944 613 129 01	tip switch		1	
	01C	satin black rear lid unlocking device			
26	477 867 185 B	mounting piece		1	
27	951 613 123 00	switch lifting roof		1	
28	944 613 124 00	rose		1	

- -- E N D -- -

Model	Year	MG	SG	Illustration	Restrictions	Update				
944	85	9	03	903-05		187	10:52	07.04.2005	PORSCHE	PET	PORSCHE

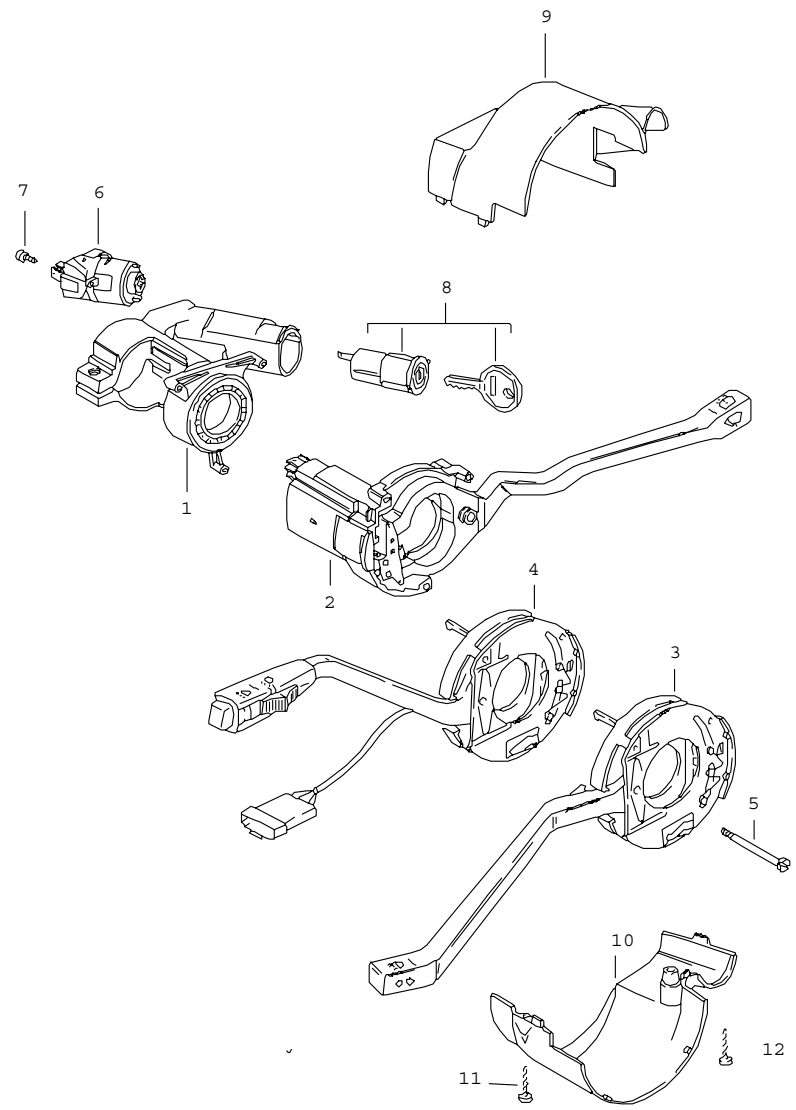

Pos	Part Number	Name	Remarks	Qty	Model
		steering lock housing steering column switch			
1	321 905 851 D	steering lock housing		1	
2	477 953 902	wiper switch		1	
	01C	black			
	89S	brown			
3	477 953 901	direction indicator switch		1	
	01C	black			
	89S	brown			
4	477 953 903	direction indicator switch cruise control		1	M 454
	01C	black			
	89S	brown			
(4)	477 953 905	direction indicator switch cruise control		1	M 454 (F)
	01C	black			
	89S	brown			
5	321 953 573	screw		3	
6	111 905 865 L	ignition starter switch		1	
7	900 146 104 02	screw		1	
8	477 905 855 C	lock cylinder w/o stipulated lock number		1	
(8)	477 905 855 D	lock cylinder with stipulated lock-no.		1	
9	477 953 515 B	lining upper part		1	
	1DB	black			
	4RB	cadbury brown			
10	477 953 516 B	lining lower part		1	
	1DB	black			
	4RB	cadbury brown			

Pos	Part Number	Name	Remarks	Qty	Model	Pos	Part Number	Name	Remarks	Qty	Model
11	N 043 959 1	tapping screw B 2,9 X 22		2							
(11)	N 043 959 1	tapping screw B 2,9 X 22		1	M 454						
12	N 013 953 10	tapping screw B 2,9 X 9,5		1	M 454						
		- -- E N D -- -									

Model	Year	MG	SG	Illustration	Restrictions	Update				
944	85	9	03	903-10		187	10:52	07.04.2005	PORSCHE	PET	PORSCHE

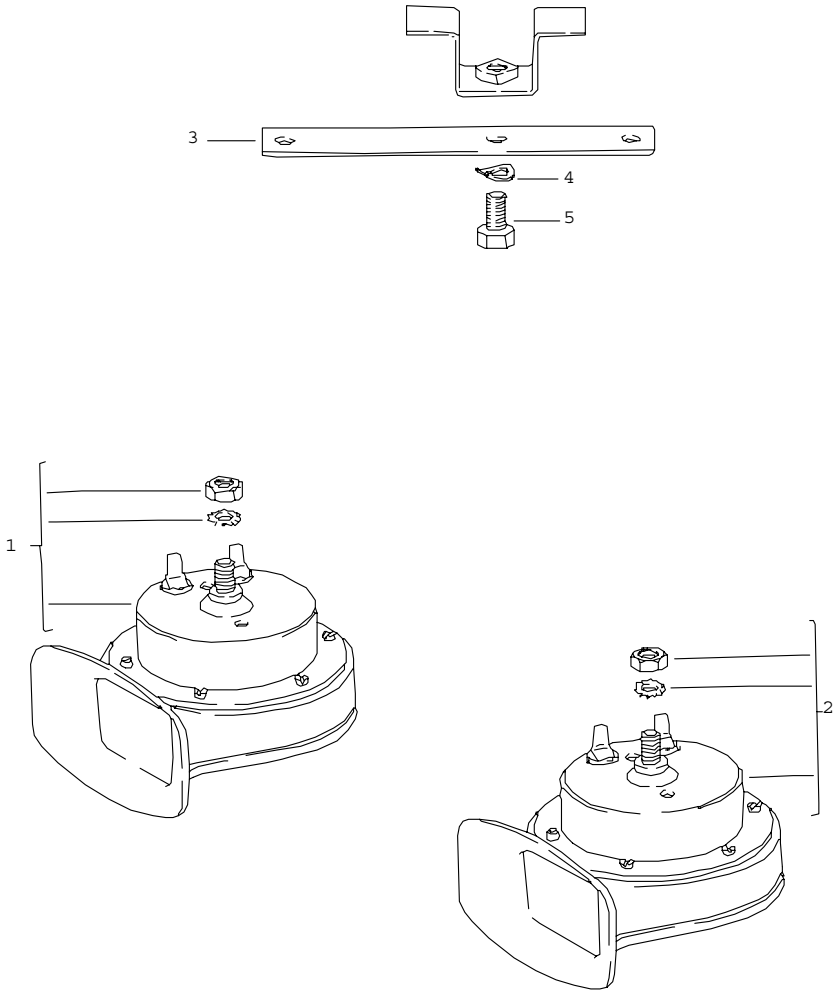

Pos	Part Number	Name	Remarks	Qty	Model
		horn			
1	928 635 222 00	fanfare low-pitched		1	
2	928 635 221 00	fanfare high-pitched		1	
3	810 951 229	spring clip		1	
4	N 012 228 3	spring washer B 8		1	
5	900 075 078 02	hexagon-head bolt M 8 X 15		1	
		- -- E N D -- -			

Model	Year	MG	SG	Illustration	Restrictions	Update				
944	85	9	04	904-00		187	10:52	07.04.2005	PORSCHE	PET	PORSCHE

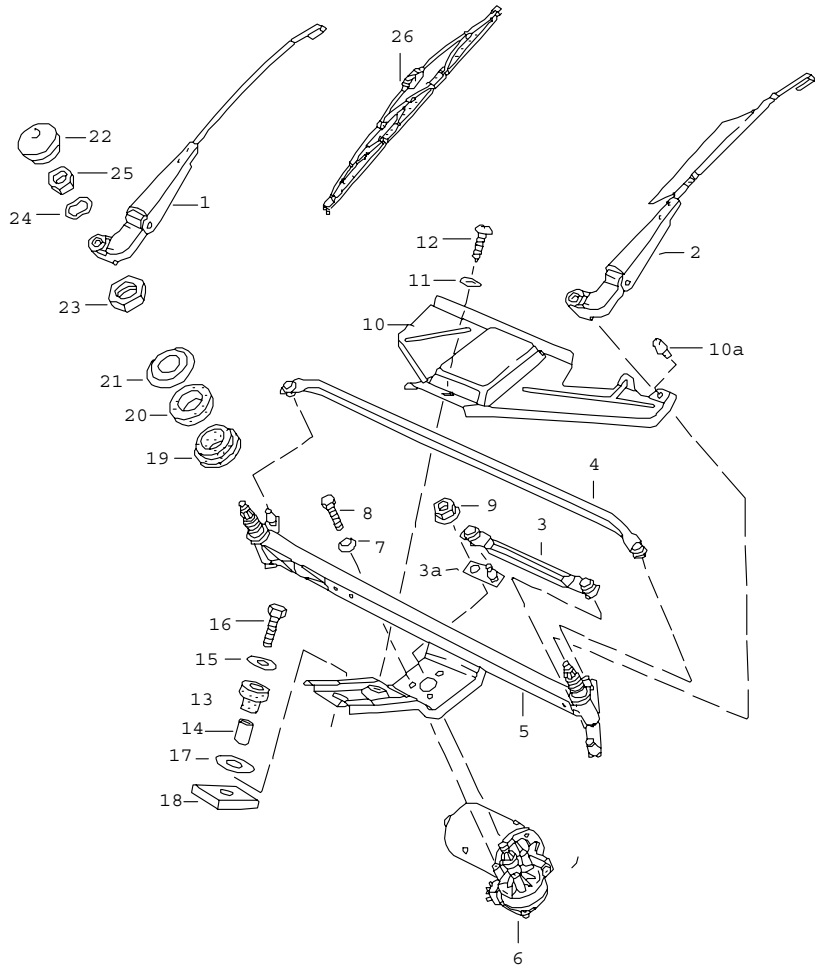

Pos	Part Number	Name	Remarks	Qty	Model
		windscreen wiper system			
1	477 955 028	wiper arm passenger's side		1	
(2)	478 955 027 A	wiper arm driver's side	/RL	1	
2	477 955 027	wiper arm driver's side with spoiler	/LL	1	
3	477 955 035 B	connecting rod short		1	
3A	477 955 039 A	crank		1	
4	477 955 036 B	connecting rod long		1	
5	477 955 041 B	frame		1	
6	477 955 113 B	windscreen wiper motor		1	
7	N 012 105 3	serrated lock washer A 6,4		3	
8	999 072 005 09	hexagon-head bolt M 6 X 12		3	
9	E 999 084 045 02	nut M 6		1	
10	477 955 123	cover	/LL	1	
(10)	478 955 123	cover	/RL	1	
10A	E 803 827 589 A	buffer		1	
11	N 011 692 3	washer B 5,1		1	
12	N 013 957 5	tapping screw BZ 3,5 X 9,5		1	
13	477 955 127	rubber bush		1	
14	477 955 128	spacer sleeve		1	
15	N 011 666 7	washer B 6,4		1	
16	900 378 030 09	hexagon-head bolt M 6 X 20		1	
17	281 711 135	washer 12,2 X 28 X 2		1	

Pos	Part Number	Name	Remarks	Qty	Model	Pos	Part Number	Name	Remarks	Qty	Model
18	477 955 129	desk pad		1							
19	901 628 924 00	rubber bush		2							
20	901 628 923 01	rubber bush		2							
21	911 628 963 00	washer		2							
22	477 955 205	cap		2							
23	481 955 243 A	hexagon nut M 16 X 1		2							
24	803 955 437	washer		2							
25	N 011 008 8	hexagon nut M 8		2							
26	478 955 425	wiper blade		2							
		- -- E N D -- -									

Model	Year	MG	SG	Illustration	Restrictions	Update	10:53	07.04.2005	PORSCHE PET PORSCHE
944	85	9	04	904-05		187			

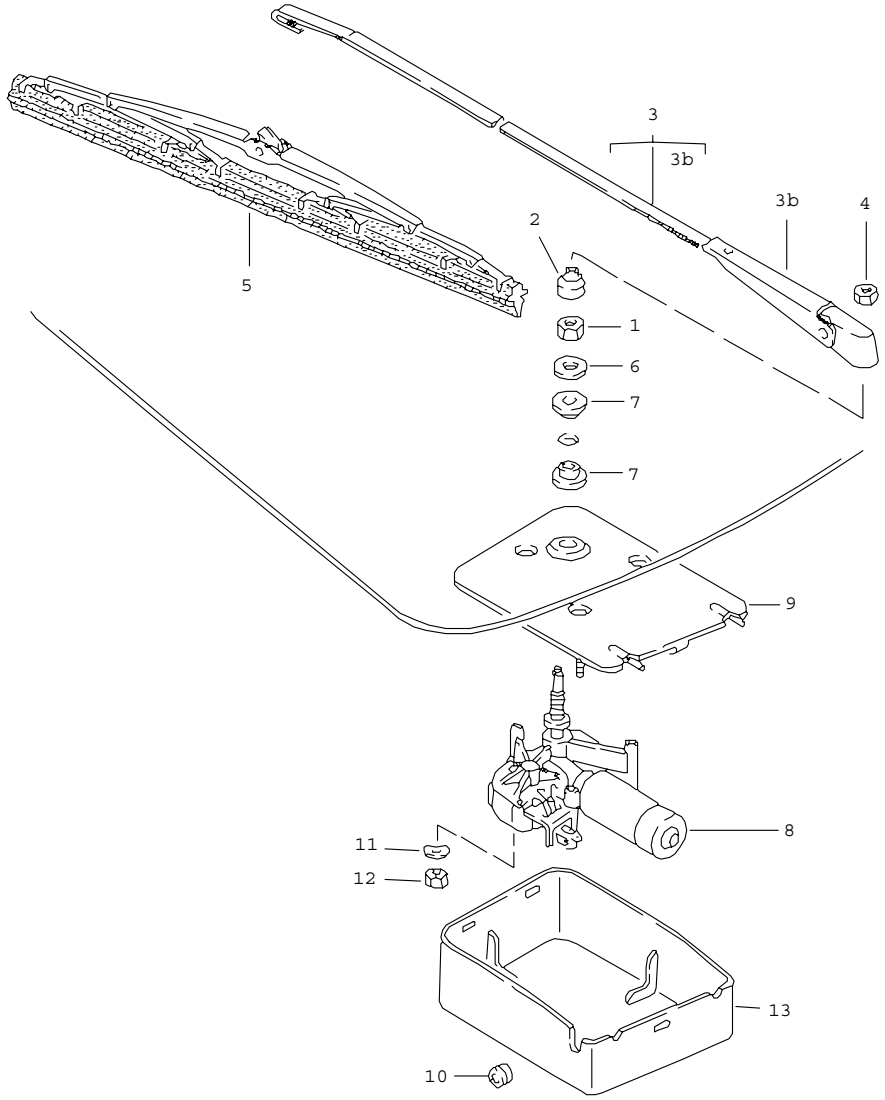

Pos	Part Number	Name	Remarks	Qty	Model
		rear window wiper			M 425
1	311 955 243 A	hexagon nut M 12 X 1		1	
2	211 955 275 A	cap		1	
(3)	477 955 409 A	wiper arm		1	
3B	477 955 415	cap		1	
4	E 999 084 045 02	nut		1	
(5)	928 628 218 01	wiper blade		1	
(6)	477 955 435 A	washer		1	
7	477 955 439	grommet		2	
8	477 955 713 A	wiper motor together with rear lid MOD.88- use also:		1	
-	944 628 071 02	plate		1	
	03C	black			
-	445 955 753	bush		1	
-	533 955 758	grommet		1	
-	944 628 103 00	bush		1	
-	N 014 133 8	oval-head screw M 5 X 12		2	
-	N 011 524 7	washer A 6,4		4	
-	999 209 017 02	spacer sleeve		2	
-	999 702 180 40	rubber sleeve		2	
9	477 955 715 B	plate		1	
10	111 941 189	drain bush		1	
11	N 012 226 5	spring washer B 6		3	
12	900 076 010 02	hexagon nut M 6		3	
13	477 955 737	cap		1	

Pos	Part Number	Name	Remarks	Qty	Model	Pos	Part Number	Name	Remarks	Qty	Model
-	311 949 149 B	grommet for wiring harness		1							
-	171 971 999 A	connector housing		1							
		- -- E N D -- -									

Model	Year	MG	SG	Illustration	Restrictions	Update				
944	85	9	04	904-10		187	10:53	07.04.2005	PORSCHE	PET	PORSCHE

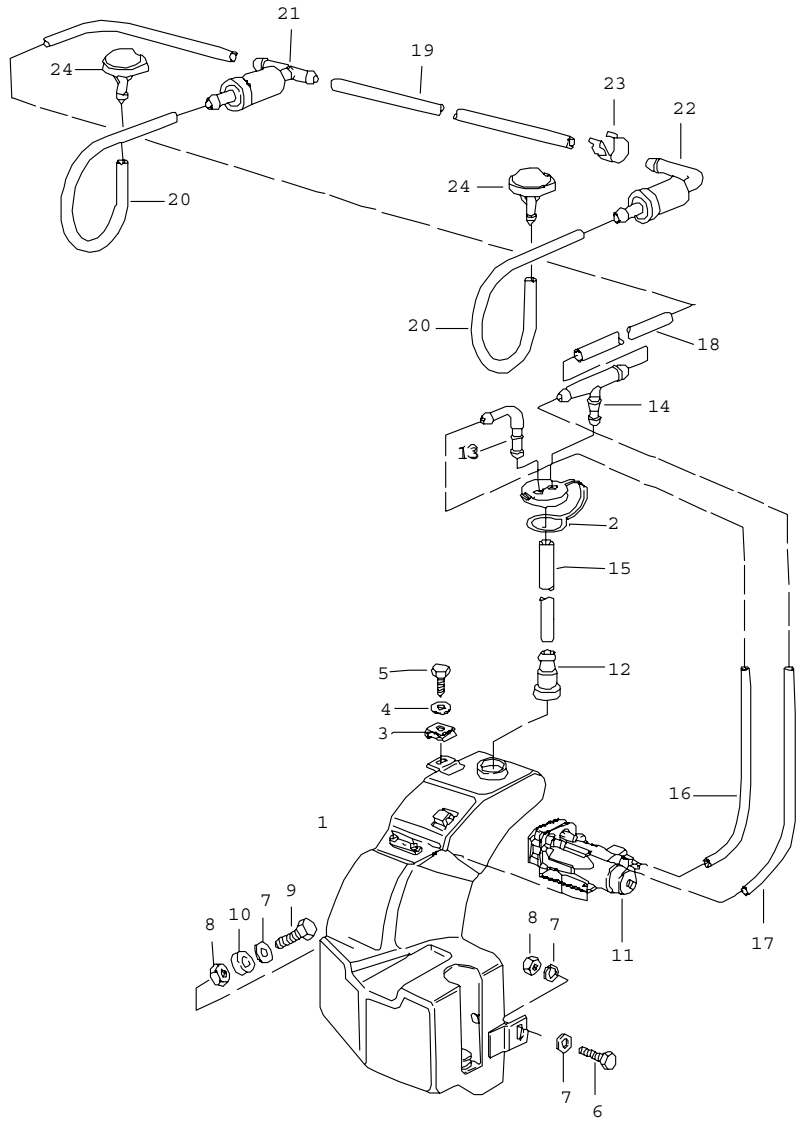

Pos	Part Number	Name	Remarks	Qty	Model
		windscreen washer system			
1	477 955 451 D	fluid tank		1	
2	477 955 455	cover		1	
3	477 955 461	speed nut 6,3 X 22		1	
4	N 011 666 7	washer A 6,4		1	
5	N 013 891 1	tapping screw B 6,3 X 19		1	
6	N 010 218 6	hexagon-head bolt M 6 X 25		1	
7	N 011 612 3	washer R 7		4	
8	900 076 010 02	hexagon nut M 6		2	
9	N 010 220 3	hexagon-head bolt M 6 X 30		1	
10	052 109 135	spacer sleeve		1	
11	823 955 651	pump		1	
--	477 955 743	clip for pump		1	
12	911 628 749 00	t-piece		1	
13	477 955 456	connection piece		1	
14	477 955 459	t-socket		1	
-	N 020 301 1	hose 4 X 1		*	
15	-	500 MM		2	
16	-	260 MM		1	
17	-	280 MM		1	
18	-	1640 MM	-84	1	
19	-	390 MM	-84	1	
20	-	160 MM	-84	2	
-	999 181 722 40	hose 4,6 X 1,8		X	

Pos	Part Number	Name	Remarks	Qty	Model	Pos	Part Number	Name	Remarks	Qty	Model
(18)	-	1680 MM	85-	1							
(19)	-	500 MM	85-	1							
(20)	-	250 MM	/R 85-	1							
(20)	-	330 MM	/L 85-	1							
-	N 100 020 01	clamp	85-	8							
21	914 628 433 00	valve		1							
22	477 955 481	valve		1							
23	477 971 939	cable terminal	-84	4							
(23)	477 955 981	cable terminal	85-	1							
(23)	944 628 181 00	retaining clip	85-	6							
24	914 628 203 11	nozzle	-84	2							
(24)	944 628 911 00	nozzle heatable	-84	2							
(24)	944 628 077 00	nozzle	/R 85-	1							
	01C	black heatable									
(24)	928 628 077 00	nozzle	/L 85-	1							
	70B	black heatable									
		- -- E N D -- -									

Model	Year	MG	SG	Illustration	Restrictions	Update				
944	85	9	04	904-15		187	10:53	07.04.2005	PORSCHE	PET	PORSCHE

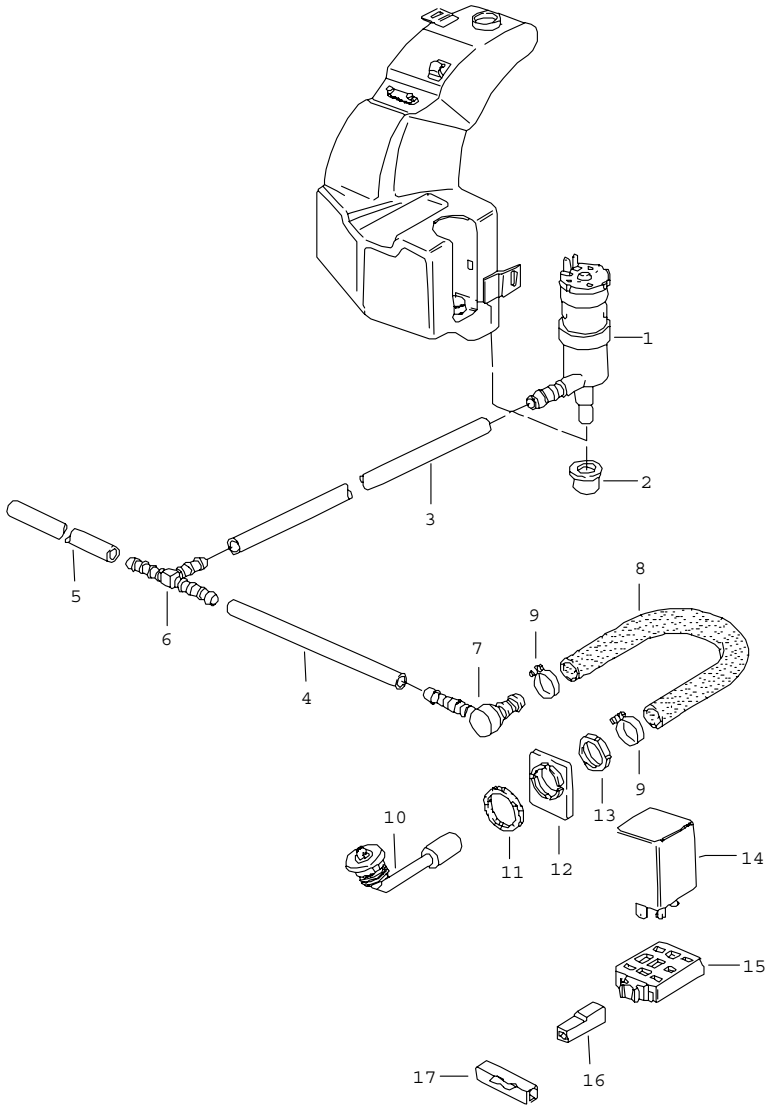

Pos	Part Number	Name	Remarks	Qty	Model
		headlight washer system			M 288
1	191 955 681	motor pump		1	
2	431 955 465 A	gasket		1	
-	N 020 126 1	pipe 12,5 X 1,25		*	
3	-	410 MM		1	
4	-	800 MM		1	
5	-	60 MM		1	
6	113 955 975 B	t-piece		1	
7	477 955 183	pressure control valve		2	
8	928 528 161 02	hose		2	
9	N 023 570 2	hose clamp		4	
10	928 528 071 02	jet carrier		2	
	03C	black			
(10)	477 955 177	jet carrier		2	M 036/058
11	944 628 803 00	rubber washer		2	
12	944 628 801 00	torsion protection		2	
13	N 019 121 1	nut MPG 11		2	
14	928 618 111 00	relay		1	
15	135 937 501 A	terminal sleeve housing		1	
16	825 971 990	terminal sleeve housing		1	
17	111 937 077 E	line distributor		1	
		- -- E N D -- -			

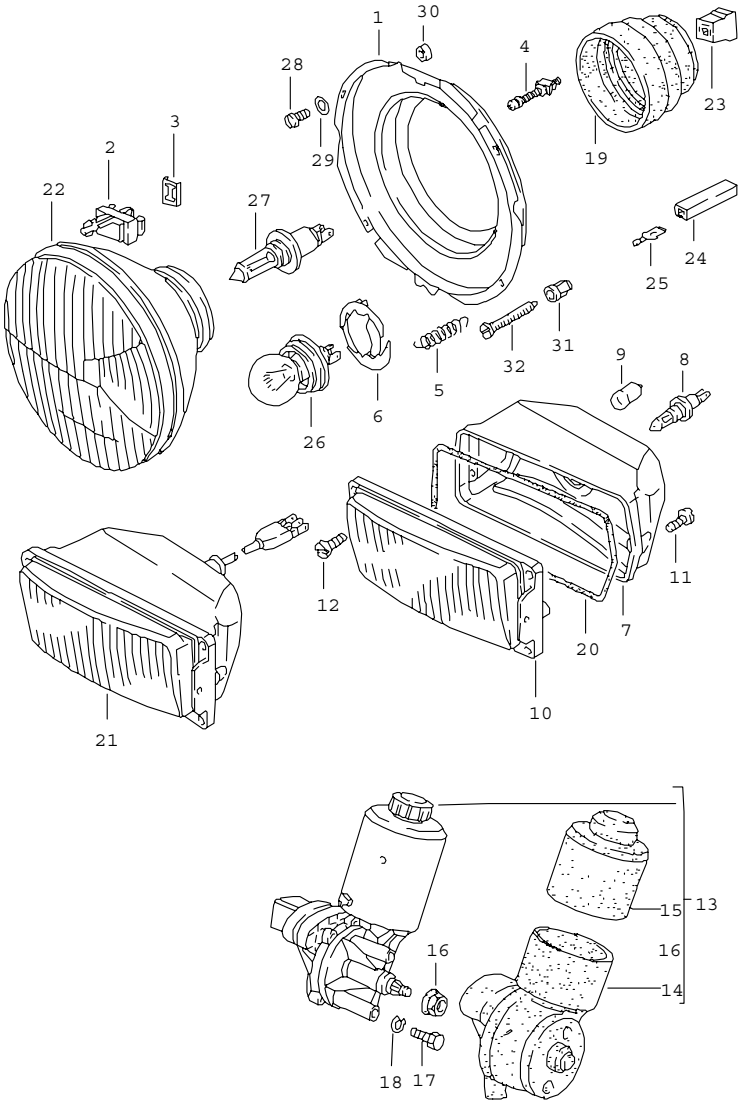

Pos	Part Number	Name	Remarks	Qty	Model
		headlamp electric motor pop-up headlight			
1	477 941 046	retaining frame		2	
2	321 941 133	articulated piece		2	
3	321 941 135	tab washer for articulated piece		2	
4	113 941 141	adjusting screw with threaded piece		4	
5	321 941 157	tension spring		2	
6	111 941 160	retainer spring		2	(J)
7	E 477 941 311	reflector	/L	1	
(7)	477 941 311 A	reflector	/R	1	
8	900 631 126 90	halogen bulb H 3		2	
9	900 631 103 90	bulb 12 V 4 W		2	
10	944 631 407 00	additional headlamp with retaining frame	/L	1	
(10)	944 631 409 00	additional headlamp yellow with retaining frame	/L	1	(F)
(10)	944 631 408 00	additional headlamp with retaining frame	/R	1	
(10)	944 631 410 00	additional headlamp yellow with retaining frame	/R	1	(F)
11	N 014 122 8	oval-head screw M 4 X 8		6	
12	900 146 053 07	oval-head screw AM 4 X 18		6	
13	477 941 379 B	electric motor pop-up headlight		1	

Pos	Part Number	Name	Remarks	Qty	Model
14	477 941 386	protection cap lower		1	
15	477 941 387	protection cap upper		1	
16	999 084 049 02	lock nut		1	
17	999 072 005 09	hexagon-head bolt M 6 X 12		3	
18	N 012 007 2	lock ring B 6		3	
19	477 941 659 A	cap headlamp unit		2	
20	477 941 715	gasket		2	
21	477 941 751 D	high-beam headlight white	/L	1	
(21)	944 631 409 00	additional headlamp yellow	/L	1	(F)
(21)	477 941 752 D	high-beam headlight white	/R	1	
(21)	944 631 410 00	additional headlamp yellow	/R	1	(F)
22	477 941 771 B	headlamp		2	
(22)	477 941 773	headlamp		2	M 492
(22)	477 941 775 C	headlamp		2	(J)
23	111 941 341	connector housing 3-pole		2	
24	111 971 977	plug with guide		6	
25	111 971 986	flat plug 6,3 X 0,8		6	
26	900 631 109 90	bulb 12 V 45/50 W		2	(J)
27	999 631 202 90	halogen bulb H 4		2	
(27)	999 631 202 91	halogen bulb H 4		2	(F)
28	900 143 041 00	tapping screw B 3,9 X 19		8	
30	477 941 543	spacer sleeve		X	
31	477 857 173	clip		2	
32	N 043 979 2	tapping screw BZ 4,2 X 45		2	

- -- E N D -- -

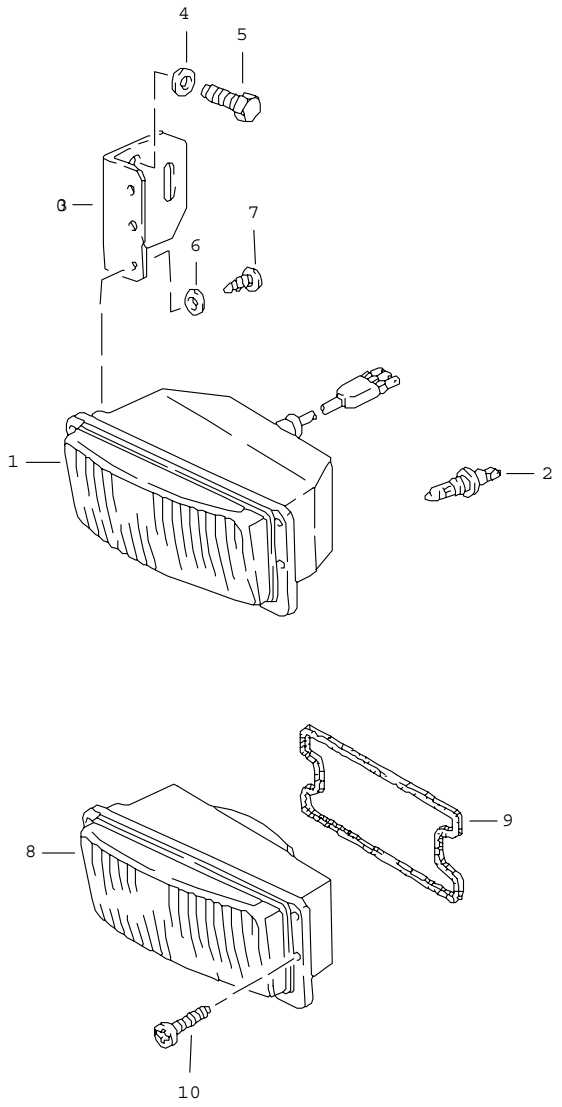

Pos	Part Number	Name	Remarks	Qty	Model
		fog headlamp			
1	944 631 201 01	fog headlamp white	/L	1	
1	944 631 203 01	fog headlamp yellow	/L	1	
(1)	944 631 202 01	fog headlamp white	/R	1	
(1)	944 631 204 01	fog headlamp yellow	/R	1	
2	900 631 126 90	bulb H 3		2	
3	944 501 375 00	support		2	
4	900 025 003 02	washer A 5,3		8	
5	N 013 971 3	tapping screw B 4,8 X 22		8	
6	N 011 524 7	washer A 6,4		4	
7	999 072 005 09	hexagon-head bolt M 6 X 12		4	
8	944 631 901 00	lens white	/L	1	
(8)	944 631 902 00	lens white	/R	1	
(8)	944 631 903 00	lens yellow	/L	1	
(8)	E 944 631 904 00	lens yellow	/R	1	
9	437 941 715	gasket		2	
10	N 010 707 2	oval-head screw		4	
-	944 612 177 00	wiring harness		1	(S)(N)(CH)
		- -- E N D -- -			

Model	Year	MG	SG	Illustration	Restrictions	Update				
944	85	9	05	905-10		187	10:54	07.04.2005	PORSCHE	PET	PORSCHE

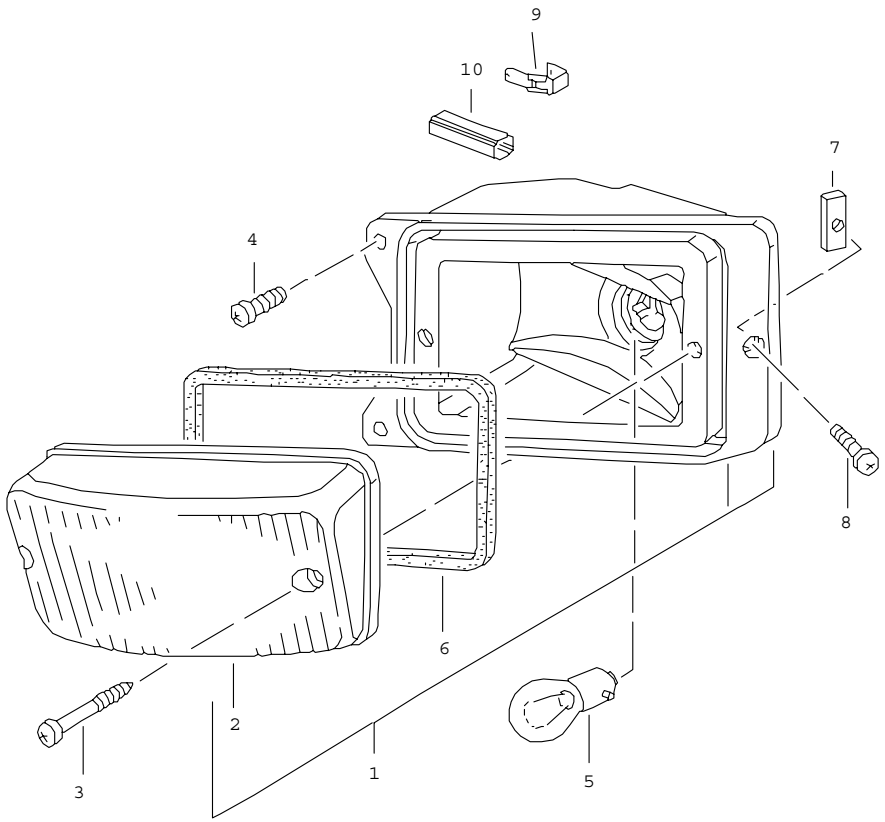

Pos	Part Number	Name	Remarks	Qty	Model
		direction indicator light front			
1	477 953 043	direction indicator light	/L	1	
(1)	477 953 044	direction indicator light	/R	1	
2	477 953 161	lens	/L	1	
(2)	477 953 162	lens	/R	1	
3	331 945 185	oval-head screw		4	
4	900 146 011 02	oval-head screw M 4 X 10		4	
5	900 631 127 90	bulb 12 V - 21 W		2	
6	477 953 165	gasket		2	
7	931 505 181 00	threaded plate		2	
8	N 014 119 1	oval-head screw M 4 X 20		2	
9	111 971 511	line distributor		1	
10	111 971 921	protection cap for flat connector		4	
		- -- E N D -- -			

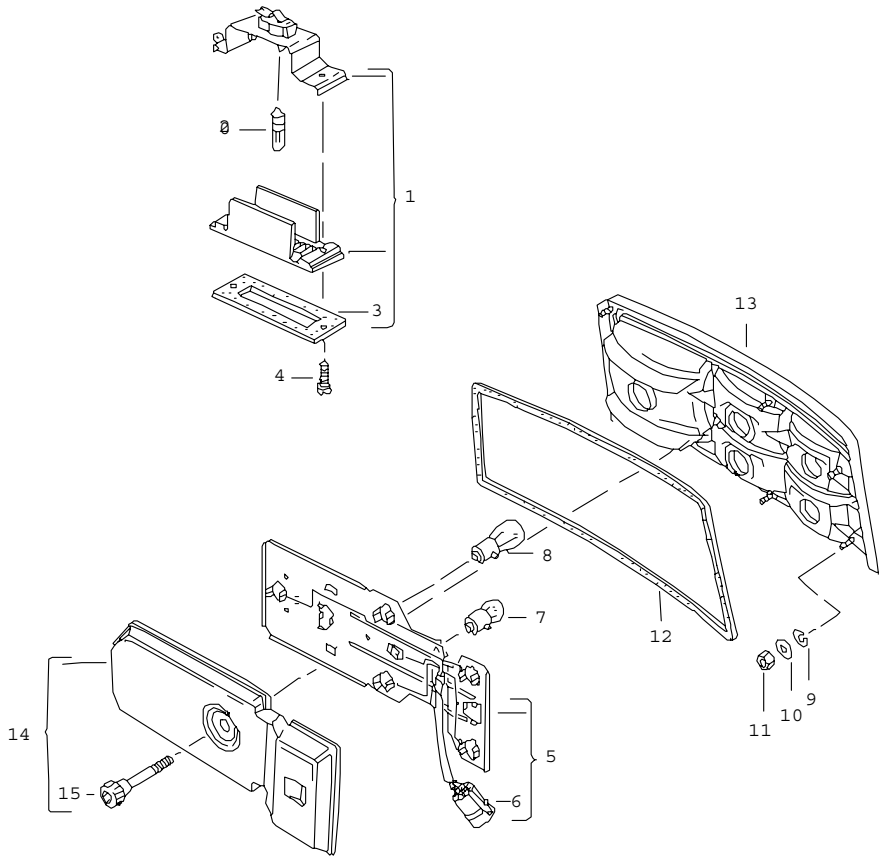

Pos	Part Number	Name	Remarks	Qty	Model
		license plate light rear light			
1	477 943 021 A	license plate light		2	
2	900 631 103 90	bulb 12 V - 4 W		2	
3	477 943 131	gasket		2	
4	N 013 961 2	tapping screw B 3,9 X 13		2	
5	477 945 113	bulb holder	/L	1	
(5)	477 945 114	bulb holder	/R	1	
6	803 971 980	connector 7-pole		2	
7	900 631 104 90	bulb 12 V - 5 W		2	
8	900 631 127 90	bulb 12 V - 21 W		7	
9	N 012 005 3	lock ring B 5		12	
10	N 012 222 4	spring washer A 5		12	
11	N 011 005 14	hexagon nut M 5		12	
-	000 043 172 00	sealing cord 9 MM $ roller 10 M		*	
12	-	1070 MM		2	
13	477 945 205	housing with lens	/L	1	
(13)	477 945 206	housing with lens	/R	1	
(13)	477 945 215	housing with lens for cars with rear fog light	/L	1	

Pos	Part Number	Name	Remarks	Qty	Model	Pos	Part Number	Name	Remarks	Qty	Model
(13)	477 945 216	housing with lens for cars with rear fog light	/R	1							
14	477 945 285	cap		2							
15	477 945 285	cap		2							
		- -- E N D -- -									

Model	Year	MG	SG	Illustration	Restrictions	Update				
944	85	9	05	905-20		187	10:54	07.04.2005	PORSCHE	PET	PORSCHE

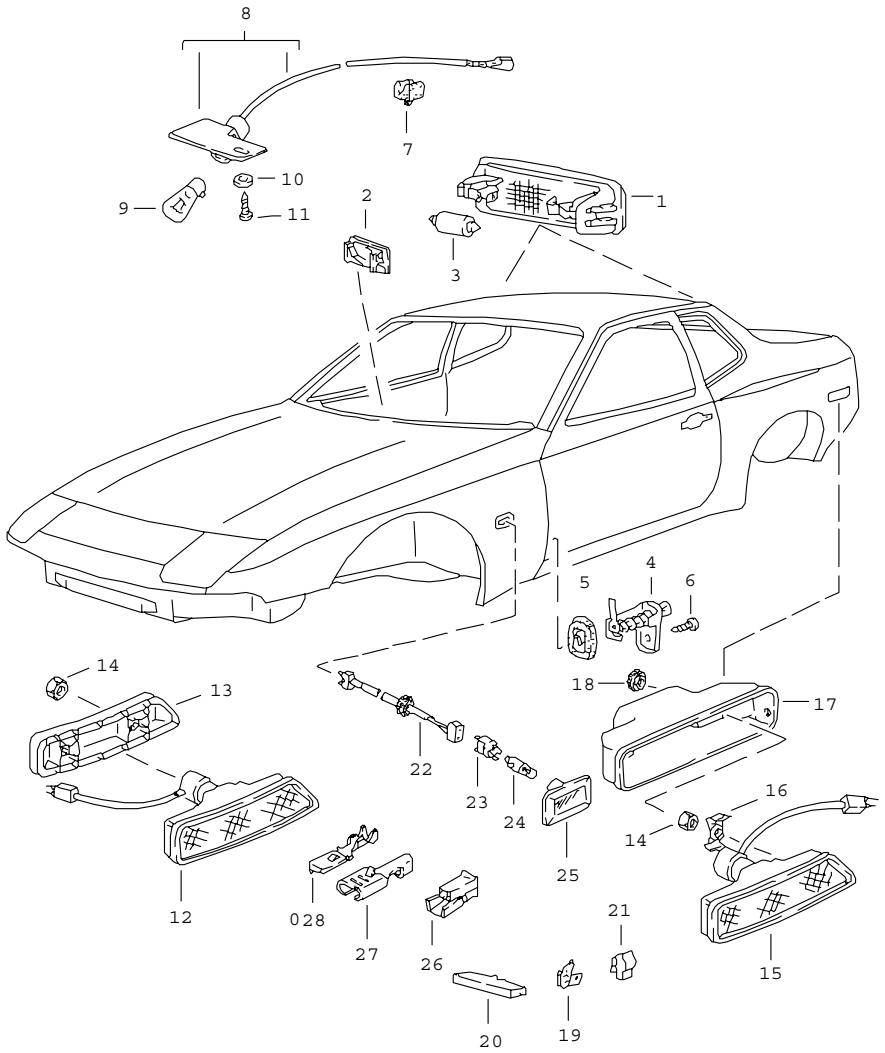

Pos	Part Number	Name	Remarks	Qty	Model
		interior light side turn signal			
1	823 947 105 B	interior light luggage boot lamp		2	
2	171 947 311	glove compartment light		1	
3	900 631 106 90	linolite lamp 12 V - 10 W		2	
(3)	999 631 018 90	bulb 12 V - 3W		1	
4	968 613 601 00	contact switch		2	
5	944 613 114 00	gasket		2	
6	N 013 957 5	tapping screw BZ 3,5 X 9,5		2	
7	477 947 633	clip		3	
8	477 947 601 A	engine compartment lamp		1	
9	900 631 115 90	bulb 12 V - 10 W		1	
10	900 151 028 02	washer 4,3		1	
11	900 143 031 02	oval-head sheetmetal screw B 4,2 X 9,5		1	
19	111 971 511	line distributor		2	
20	111 971 977	plug with guide simple		2	
22	477 971 193	harness side turn signal		2	
23	161 949 111	bulb holder		2	
24	999 631 032 90	bulb		2	
25	4A0 949 101	side turn signal		2	
		- -- E N D -- -			

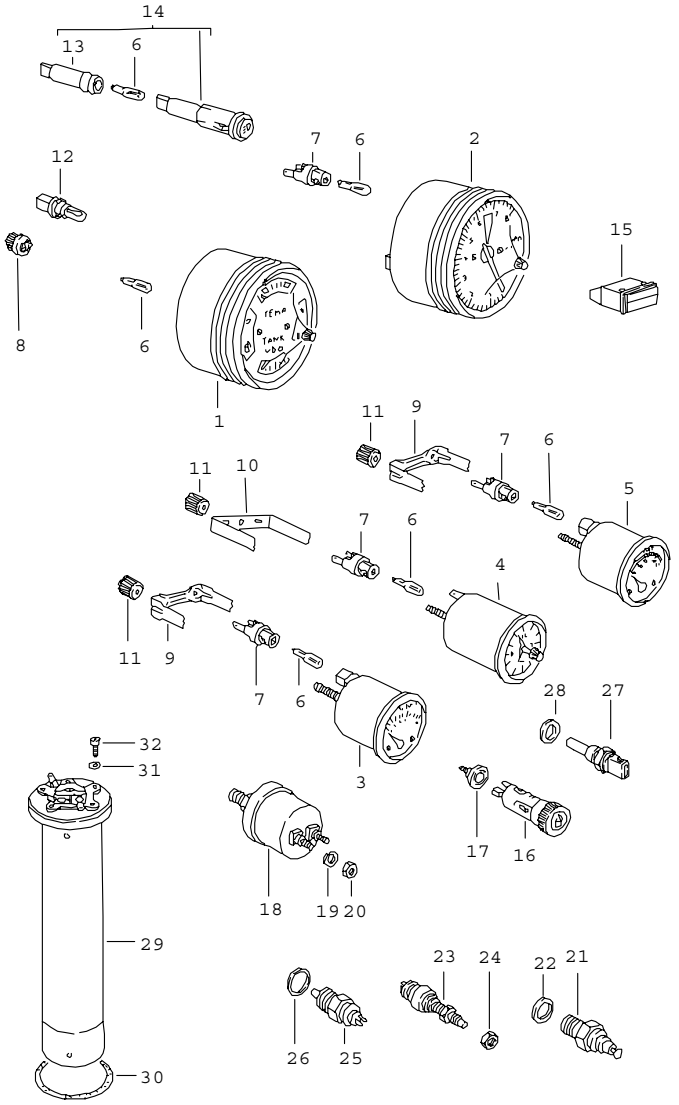

Pos	Part Number	Name	Remarks	Qty	Model
		instruments			
1	944 641 310 00	instrument cluster		1	
2	944 641 203 00	tachometer without consumption indicator	82	1	
(2)	944 641 205 01	tachometer with consumption indicator		1	
(2)	944 641 207 01	tachometer with consumption indicator		1	(GB)
3	944 641 117 01	oil pressure indicator		1	
4	944 641 115 00	clock		1	
5	944 641 119 00	voltmeter		1	
6	900 631 132 90	bulb 12 V - 1,2 W		X	
7	999 632 017 02	bulb holder single pole		X	
8	928 641 927 00	bulb holder indicator light generator		1	
9	321 919 115 C	holder		2	
10	E 477 919 115	holder		1	
11	411 957 117	knurled nut M 4		5	
12	999 631 301 90	bulb		7	
13	111 919 243	bulb holder		1	
14	477 919 210 A	indicator light high beam		1	(GB)
(14)	477 919 210 B	indicator light exhaust gas temperature monitoring		1	(J)
15	171 919 235	combination warning light	/LL -83	1	
(15)	944 632 211 00	combination warning light	84-	1	
(15)	171 919 235 Q	combination warning light	/RL -83	1	
(15)	945 632 212 00	combination warning light	84-	1	(AUS)

Pos	Part Number	Name	Remarks	Qty	Model	Pos	Part Number	Name	Remarks	Qty	Model
(15)	944 632 213 00	combination warning light		1	(SA)						
16	477 919 305	cigarette lighter	-84	1							
16	477 919 307	cigarette lighter	85-	1							
-	N 012 469 1	snap ring for cigarette lighter		1							
17	644 652 112 00	glower		1							
18	928 606 203 01	oil pressure sender		1							
19	N 012 224 3	spring washer A 4		2							
20	N 011 004 6	hexagon nut M 4		2							
21	047 919 501 A	temperature sensor		1							
22	N 013 806 2	sealing ring		1							
23	477 945 515	stop light switch		1							
24	481 945 529	nut M 12		1							
25	084 941 521	back-up light switch		1							
26	900 123 106 30	sealing ring		1							
27	944 606 125 00	temperature sensor		1							
28	900 123 101 30	sealing ring		1							
29	477 919 051 B	tank gauge		1							
30	477 919 133	sealing ring		1							
31	N 013 802 1	sealing ring		5							
32	N 044 734 1	pan-head screw M 5		5							
		- -- E N D -- -									

Model	Year	MG	SG	Illustration	Restrictions	Update				
944	85	9	06	906-05		187	10:55	07.04.2005	PORSCHE	PET	PORSCHE

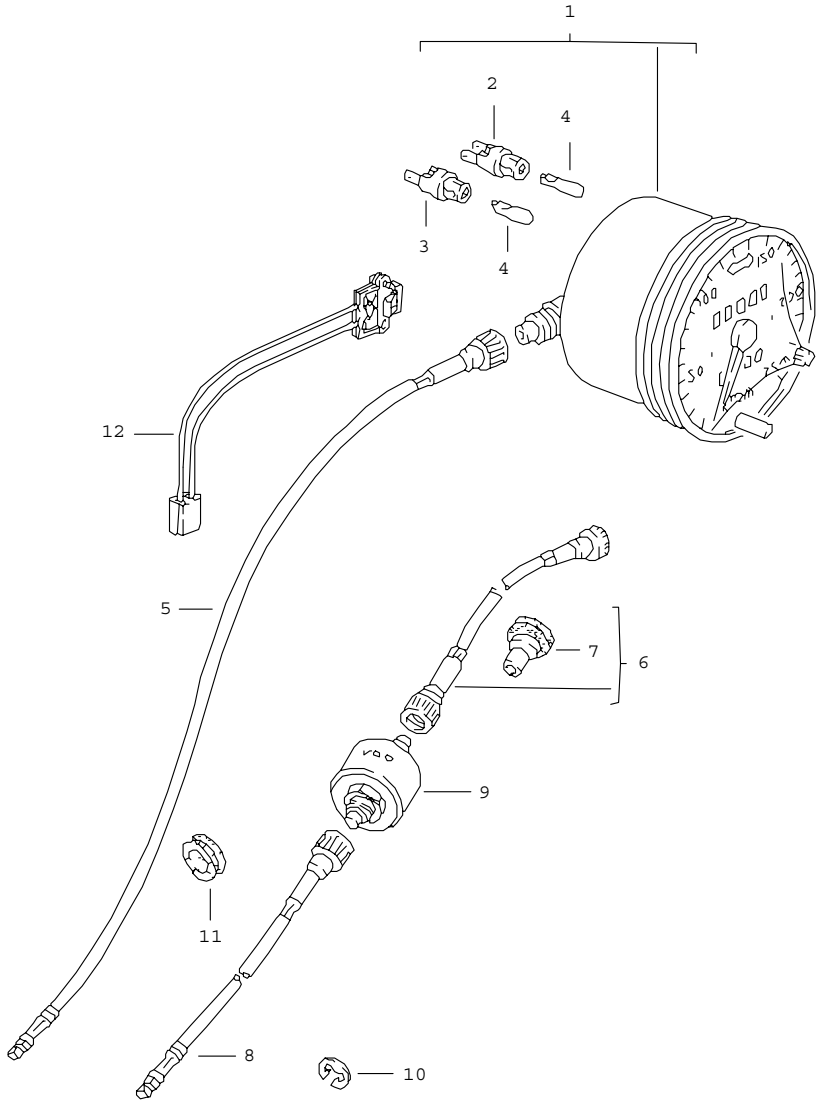

Pos	Part Number	Name	Remarks	Qty	Model
		speedometer			
1	944 641 030 00	speedometer 260 KM/H	/LL	1	
1	944 641 036 00	speedometer 260 KM/H - 170 MPH	/RL	1	(GB),(HK)
1	944 641 034 00	speedometer 260 KM/H		1	(J)
2	914 631 179 10	bulb holder 2-pole		1	
3	999 632 017 02	bulb holder single pole		2	
4	900 631 132 90	bulb 12 V - 1,2 W		3	
5	142 957 801 C	drive shaft	/LL	1	
(5)	211 957 801 E	drive shaft	/RL	1	
6	944 641 801 00	drive shaft		1	(J)(SA)
7	477 957 861	rubber sleeve	/LL	1	
(7)	311 611 743	grommet	/RL	1	
8	477 957 809 E	drive shaft		1	(J)(SA)
9	477 957 901 B	switch speed warning device		1	(J)
(9)	944 641 237 00	switch speed warning device		1	(SA)
10	900 116 003 02	lock washer		1	
-	321 951 307	buzzer		1	(J)(SA)
11	113 957 855	rubber sleeve		1	
12	944 641 251 00	hall sender		1	
		- -- E N D -- -			

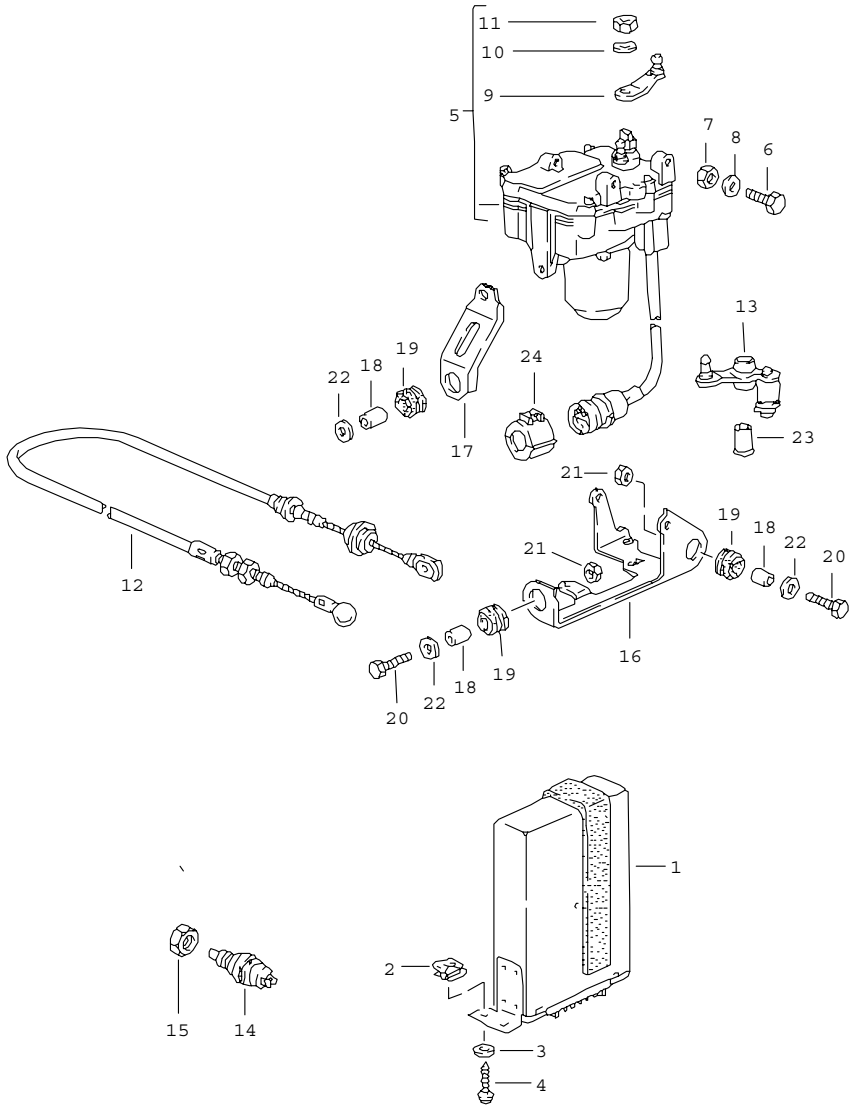

Pos	Part Number	Name	Remarks	Qty	Model
		cruise control			M 454
1	944 617 127 00	control unit		1	
2	N 015 422 2	speed nut B 4,2 X 17		2	
3	N 012 225 3	spring washer B 5		2	
4	N 013 964 4	tapping screw B 4,2 X 16		2	
5	944 617 021 00	drive link		1	
6	999 072 005 09	hexagon-head bolt M 6 X 12		2	
7	900 076 010 02	hexagon nut M 6		2	
8	N 011 524 7	washer A 6,4		2	
9	944 423 047 00	lever for drive link		1	
10	N 012 229 3	spring washer A 8		1	
11	N 011 018 4	hexagon nut M 8 X 1		1	
12	944 423 025 02	cable		1	
13	944 423 055 00	reverse lever		1	
14	944 613 413 00	switch		1	
15	481 945 529	nut M 12 X 1		1	
16	944 423 215 02	support		1	
17	944 423 115 02	strut		1	
18	999 531 014 02	bush		3	
19	999 702 133 40	rubber mounting		3	
20	900 075 017 02	hexagon-head bolt M 6 X 25		2	
21	900 076 010 02	hexagon nut M 6		2	

Pos	Part Number	Name	Remarks	Qty	Model	Pos	Part Number	Name	Remarks	Qty	Model
22	N 011 666 7	washer B 6,4		4							
23	999 924 001 40	bush		2							
		- -- E N D -- -									

Model	Year	MG	SG	Illustration	Restrictions	Update					
944	85	9	09	909-00		187	10:55	07.04.2005	PORSCHE	PET	PORSCHE

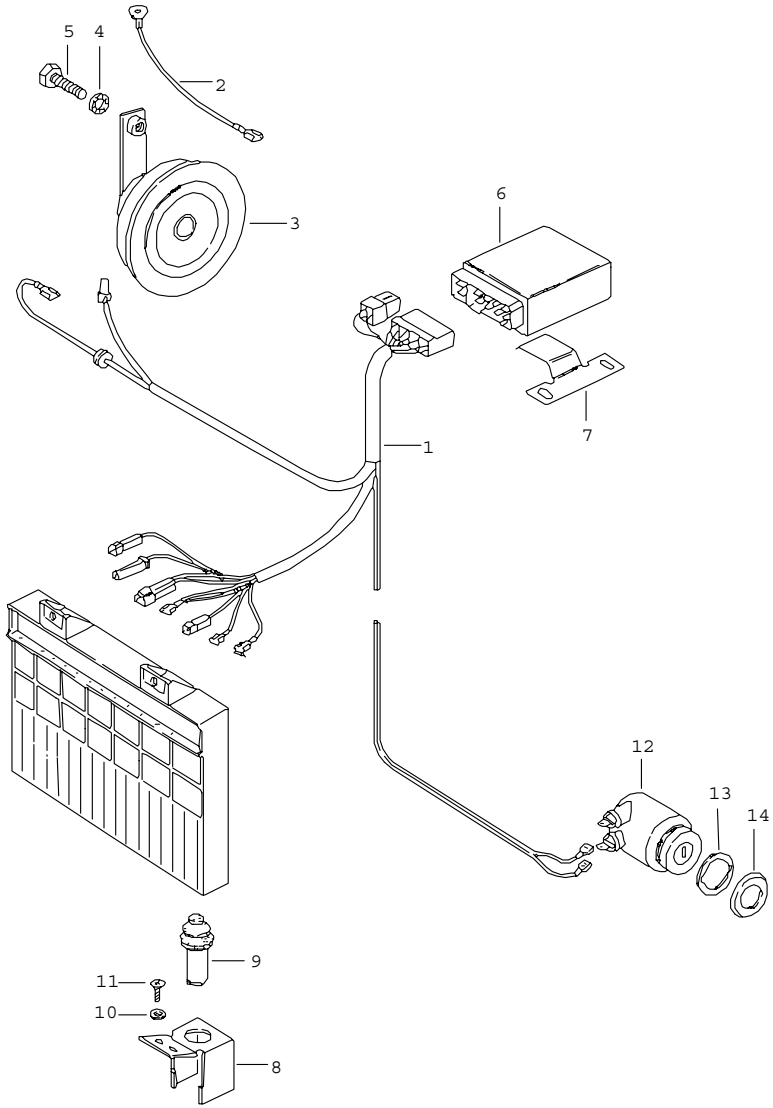

Pos	Part Number	Name	Remarks	Qty	Model
		alarm system			M 533
1	477 971 163	wiring harness		1	
2	E 477 971 325	single line		1	
3	944 637 103 01	high volume horn		1	
4	999 523 102 02	shake-proof washer J 8,4		1	
5	900 075 087 02	hexagon-head bolt M 8 X 16		1	
6	911 637 104 00	control unit		1	
6	911 637 104 01	control unit		1	(CH)
7	477 857 069	support		1	
8	477 805 713	support		1	
9	928 613 173 00	contact switch		1	
-	477 971 837	connector housing for contact switch		1	
10	N 011 521 3	washer A 3,7		2	
11	N 013 957 5	tapping screw 3,5 X 9,5		2	
12	911 637 101 00	alarm switch with keys		1	
13	477 951 255	washer		1	
14	477 951 251	rose		1	
	01C	black			
		- -- E N D -- -			

Model	Year	MG	SG	Illustration	Restrictions	Update				
944	85	9	10	910-00		187	10:56	07.04.2005	PORSCHE	PET	PORSCHE

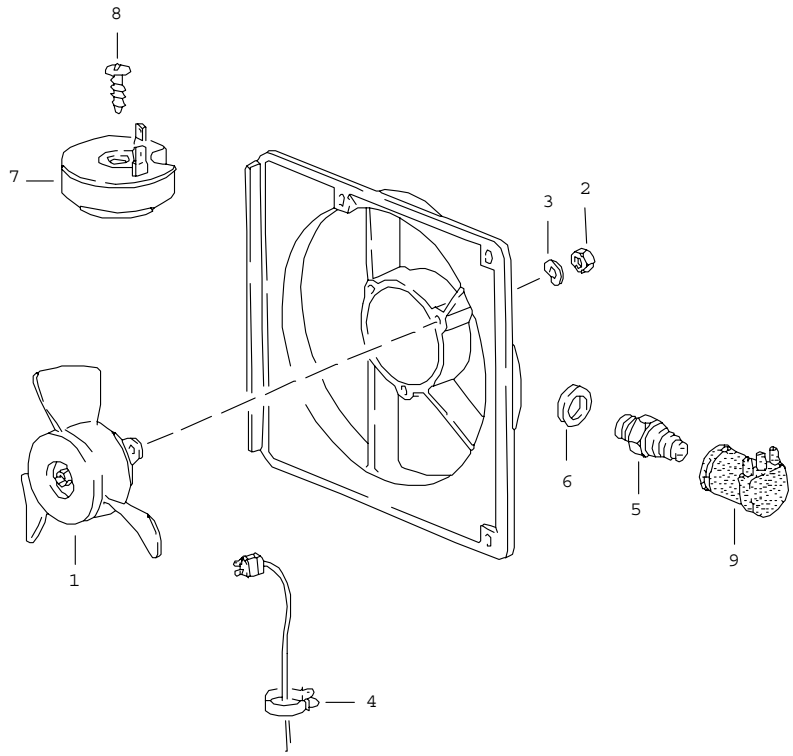

Pos	Part Number	Name	Remarks	Qty	Model
		electric fan			
1	944 624 021 01	electric fan F >>94DN4 01734		1	
(1)	944 624 021 03	electric fan F 94DN4 01735>>		1	
(1)	944 624 021 01	electric fan F >>94DN4 01734		2	M 573
(1)	944 624 021 03	electric fan F 94DN4 01735>>		2	M 573
2	900 910 012 02	lock nut M 6		3	
3	N 011 666 7	washer B 6,4		3	
4	999 651 168 40	cable holder		1	
5	823 959 481 F	switch		1	
6	900 123 118 30	sealing ring A 22 X 27		1	
7	477 905 053	series resistor		1	
8	N 013 964 4	tapping screw B 4,2 X 16		1	
9	477 971 934	protection cap		1	
		- -- E N D -- -			

Model	Year	MG	SG	Illustration	Restrictions	Update		
944	85	9	98	REP		187	9:45	13.04.2005

Pos	Part Number	Name	Remarks	Qty	Model
		repair kits			
>>	> 944 628 997 00	installation set headlight washer system comprising:		1	
-	191 955 681	pump		1	
-	431 955 465 A	gasket		1	
-	N 020 126 1	pipe 12,5 X 1,25		X	
-	-	410 MM		1	
-	-	890 MM		1	
-	-	100 MM		1	
-	113 955 975 B	t-piece		1	
-	477 955 183	pressure control valve		2	
-	928 528 071 02	jet carrier		2	
-	944 628 803 00	rubber washer		2	
-	944 628 801 00	torsion protection		2	
-	N 019 121 1	nut		2	
-	N 019 121 1	nut MPG 11		2	
-	928 618 111 00	relay		1	
-	135 937 501 A	terminal sleeve housing		1	
-	825 971 990	terminal sleeve housing		1	
-	111 937 077 E	line distributor		1	
-	477 971 827 B	cable connection		1	
-	477 971 205	wiring harness		1	
-	477 971 322 A	double line		1	
-	477 955 702	switch		1	
>>	> 477 955 995	installation set for rear window wiper comprising:		1	
-	477 955 713 A	wiper motor		1	
-	477 955 715 B	plate		1	
-	N 012 226 5	spring washer B 6		3	

Model	Year	MG	SG	Illustration	Restrictions	Update		
944	85	9	98	REP		187	9:45	13.04.2005

Pos	Part Number	Name	Remarks	Qty	Model
-	900 076 010 02	hexagon nut M 6		3	
-	477 955 737	cap		1	
-	477 955 439	grommet		2	
-	477 955 437	washer		1	
-	311 955 243 A	hexagon nut M 12 X 1		1	
-	211 955 275 A	cap		1	
-	477 955 409 A	wiper arm TRICO		1	
-	E 999 084 045 02	lock nut		1	
-	928 628 218 01	wiper blade		1	
-	477 971 345	harness		1	
-	477 971 346	harness		1	
-	477 955 701	rocker switch		1	
-	111 941 189	drain bush		1	
-	999 652 106 02	flat receptacle 6,3 X 1		3	
-	N 018 007 4	insulating hose 100 MM		1	
>>	> 000 043 095 00	installation set oil level warning system comprising:		1	
-	944 612 911 01	wiring harness		1	
-	944 612 923 01	wiring harness		1	
-	944 617 150 00	relay		1	
-	944 101 033 00	cover plate		1	
-	900 075 085 02	hexagon-head bolt M 8 X 20		2	
-	900 025 007 02	washer A 8,4		2	
-	477 971 881 A	retaining bracket		1	
-	999 651 162 40	cable holder		1	
-	999 513 002 40	tie-wrap		3	
-	N 017 490 6	flat connector		1	

Model	Year	MG	SG	Illustration	Restrictions	Update		
944	85	9	98	REP		187	9:45	13.04.2005

Pos	Part Number	Name	Remarks	Qty	Model
-	171 971 999	terminal sleeve housing		2	
-	000 043 095 01	installation instructions		1	
		- -- E N D -- -			

M000	! SUMMARY OF OPTIONAL EXTRAS "M"!
M020	SPEEDOMETER WITH TWO SCALES MPH-KM/H
M026	WITH ACTIVATED CHARCOAL CANISTER
M036	IMPACT ABSORBERS
M036	FRONT AND REAR
M058	IMPACT ABSORBERS FRONT AND REAR
M062	VERSION FOR SWEDEN
M124	VERSION FOR FRANCE
M157	THREE-BED CATALYST, OXYGEN SENSOR AND DIGITAL
M157	ELECTRICAL ENGINE EQUIPMENT
M190	INCREASED SIDE DOOR STRENGTH
M193	VERSION FOR JAPAN
M215	VERSION FOR SAUDI ARABIA
M220	LOCKING DIFFERENTIAL 40 %
M249	AUTOMATIC TRANSMISSION
M255	FUEL CONSUMTION INDICATOR
M288	HEADLAMP WASHER
M395	LIGHT-METAL RIMS, FORGED
M395	6J X 16 WITH TIRES 205/55 VR16
M404	STABILIZER, FRONT AND REAR
M409	SPORT SEATS, LEATHER
M410	SPORT SEATS, SEAT AND BACKREST SURFACE
M410	CLOTH/LEATHERETTE
M418	SIDE PROTECTION MOLDINGS
M423	BOX FOR CASSETTES AND COINS
M425	REAR WINDOW WIPER
M454	AUTOMATIC SPEED CONTROL
M463	SIDE GLASSES TINTED
M468	SIDE GLASSES GREEN AND WINDSHIELD GREEN -
M468	UPPER PART DARKER COLORED
M474	SHOCK ABSORBER (SPORTING) FRONT AND REAR
M475	BRAKE PADS WITHOUT ASBESTOS
M479	VERSION FOR AUSTRALIA
M484	VERSION FOR USA
M492	FOR LEFT-HAND TRAFFIC
M533	ANTI-THEFT DEVICE
M553	VERSION FOR USA, CANADA
M560	DETACHABLE ROOF
M568	TINTED SIDE GLASSES AND TINTED WINDSHIELD
M573	AIR CONDITIONER
M651	ELECTRIC WINDOW OPENER
M657	POWER ASSISTED STEERING

TR203

THIS PARTS CATALOGUE CONTAINS ALL ORDER INFORMATION OF
TYPE 944 FROM MODEL YEAR 1982 TO MODEL YEAR 1985

IT IS AVAILABLE IN TWO EDITIONS IN THE FOLLOWING LANGUAGES:

EDITION
USA, CANADA - *

EDITION
ALL OTHER COUNTRIES - GERMAN

* - ENGLISH

- FRENCH

- ITALIAN

- SPANISH

UPDATING IS BEING PERFORMED BY CHANGING OF UPDATE.

THE EDITION CAN BE RECOGNIZED BY THE CURRENT NO.
YEAR IN THE BOTTOM LINE OF SUBJECT UPDATE.

THE PREVIOUS UPDATE SHOULD NO LONGER BE USED.

ALL ILLUSTRATIONS ARE SUBJECT TO CHANGE WITHOUT OBLIGATION.

Model	Year	MG	SG	Illustration	VIN No.	Update		
944	85	9	10	910		187	10:56	07.04.2005

TR006

EXPLANATION OF THE ABRIDGED VERSION OF THE VEHICLE IDENT. NUMBERS (VIN)
USED IN THE CATALOGUE

```
 DIGIT:                1 2 3  4 5 6  7 8  9  10  11  12  13 14 15 16 17

 EXAMPLE:              W P O  Z Z Z  9 4  Z   F   N   4   0  0  1  2  5
                                     ===      =   =   =   =============
                                      !       !   !   !         !
VEHICLE TYPE 1ST+2ND DIGIT----------------+   !   !   !         !
                                              !   !   !         !
MODEL YEAR----------------------------------------+   !         !
                                                  !   !         !
MANUFACTURING LOCATION--------------------------------+         !
                                                      !         !
VEHICLE TYPE 3RD DIGIT------------------------------------+     !
                                                                !
SERIAL NUMBER-------------------------------------------------------+
```

Model	Year	MG	SG	Illustration	VIN No.	Update		
944	85	9	10	910		187	10:56	07.04.2005

FR203

FAHRZEUGTYP	MJ	FAHRZEUG-IDENT.NR	MOTORTYP
944	82	C 94 CN40 0051>>	M44.01/03 120KW
944	83	C 94 DN40 0051>>	M44.01/03 120KW
944 (USA)(CDN)	83	C 94 DN45 0051>>	M44.02/04 110KW
944 (J)	83	C 94 DN40 0051>>	M44.02/04 110KW
944	84	D 94 EN40 0051>>	M44.01/03 120KW
944 (USA)(CDN)	84	D 94 EN45 0051>>	M44.02/04 110KW
944 (J)	84	D 94 EN40 0051>>	M44.02/04 110KW
944	85	F 94 FN42 0051>>	M44.01/03 120KW
944 (USA)(CDN)	85	F 94 FN47 0051>>	M44.02/04 110KW
944 (J)	85	F 94 FN42 0051>>	M44.02/04 110KW

Model	Year	MG	SG	Illustration	VIN No.	Update		
944	85	9	10	910		187	10:56	07.04.2005

T

```
EXPLANATION OF THE MOTOR-NUMBERS USED IN THE CATALOGUE
======================================================

DIGIT:                                          1 2 3   4 5 6 7 8

EXAMPLE:                                        4 3 F   0 0 1 3 6
                                                = = =   =========
                                                ! ! !       !
ENGINE TYPE (4 = 4-CYL.-ENGINE)-----------------+ ! !       !
                                                  ! !       !
ENGINE VERSION-------------------------------------+ !       !
                                                     !       !
MODEL YEAR-----------------------------------------+        !
                                                            !
SERIAL NUMBER-----------------------------------------------+
```

Model	Year	MG	SG	Illustration	VIN No.	Update		
944	85	9	10	910		187	10:56	07.04.2005

MR203

ENGINE TYPE	ENGINE TYPE	MY	ENGINE-NUMBER	TECHNICAL DATA
944	M44.01	82 C	41C 0001>5000	4ZYL/2,5L/120KW
944 M249	M44.03	82 C	41C 5001>8000	4ZYL/2,5L/120KW
944	M44.01	83 D	41D 0001>E999	4ZYL/2,5L/120KW
944 M249	M44.03	83 D	41D 5001>9999	4ZYL/2,5L/120KW
944 (USA)(CDN)(J)	M44.02	83 D	43D 0001>J999	4ZYL/2,5L/110KW
944 M249 (USA)(CDN)(J)	M44.04	82 D	43D 5001>9999	4ZYL/2,5L/110KW
944	M44.01	84 E	41E 00001>20000	4ZYL/2,5L/120KW
944 M249	M44.03	84 E	41E 20001>30000	4ZYL/2,5L/120KW
944 (USA)(CDN)(J)	M44.02	84 E	43E 00001>20000	4ZYL/2,5L/110KW
944 M249 (USA)(CDN)(J)	M44.04	84 E	43E 20001>30000	4ZYL/2,5L/110KW
944	M44.01	85 F	41F 40001>50000	4ZYL/2,5L/120KW
944 M249	M44.03	85 F	41F 50001>60000	4ZYL/2,5L/120KW
944 (USA)(CDN)(J)	M44.02	85 F	43F 40001>50000	4ZYL/2,5L/110KW
944 M249 (USA)(CDN)(J)	M44.04	85 F	43F 50001>60000	4ZYL/2,5L/110KW

TR201

EXPLANATION OF THE TRANSMISSION-NUMBERS USED IN THE CATALOGUE

```
DIGIT:                                  1 2 3   4 5   6 7   8

EXAMPLE:                                R C D   0 7   1 0   2
                                        =====   ===   ===   =
                                          !       !     !   !
                                          !       !     !   !
IDENTIFICATION LETTER---------------------+       !     !   !
                                                  !     !   !
MANUFACTURING DAY-------------------------------+     !   !
                                                      !   !
MANUFACTURING MONTH-----------------------------------+   !
                                                          !
MANUFACTURING YEAR----------------------------------------+
```

Model	Year	MG	SG	Illustration	VIN No.	Update		
944	85	9	10	910		187	10:56	07.04.2005

GR203

VEHICLE TYPE	TRANSM. TYPE	MY	TRANSMISSION NO.	TECHNICAL DATA
944	016 J	82 C	QK.....	5-SPEED
944 M220	016 J	82 C	7Q.....	5-SPEED
944 M249	087 M	82 C	RH.....	3-SPEED
944	016 J	83 D	QK.....	5-SPEED
944 M220	016 J	83 D	7Q.....	5-SPEED
944 M249	087 M	83 D	RH.....	3-SPEED
944 M249	087 M	83 D	RCA 07102>>	3-SPEED
944 (USA)(CDN)	016 J	83 D	QM.....	5-SPEED
944 M220 (USA)(CDN)	016 J	83 D	8Q.....	5-SPEED
944 M249 (USA)(CDN)(J)	087 N	83 D	RCB.....	3-SPEED
944 (J)	016 K	83 D	QL.....	5-SPEED
944 M220 (J)	016 K	83 D	4M.....	5-SPEED
944	016 J	84 E	QK.....	5-SPEED
944 M220	016 J	84 E	7Q.....	5-SPEED
944 M249	087 M	84 E	RCA.....	3-SPEED
944 M249	087 M	84 E	RCD 21123>>	3-SPEED
944 (USA)(CDN)	016 K	84 E	QM.....	5-SPEED
944 M220 (USA)(CDN)	016 K	84 E	8Q.....	5-SPEED
944 M249 (USA)(CDN)(J)	087 N	84 E	RCB.....	3-SPEED
944 (J)	016 K	84 E	QL.....	5-SPEED
944 M220 (J)	016 K	84 E	4M.....	5-SPEED
944	016 J	85 F	QK.....	5-SPEED
944 M220	016 J	85 F	7Q.....	5-SPEED
944 M249	087 M	85 F	RCD.....	3-SPEED
944 (USA)(CDN)	016 K	85 F	QM.....	5-SPEED
944 M220 (USA)(CDN)	016 K	85 F	8Q.....	5-SPEED
944 M249 (USA)(CDN)(J)	087 N	85 F	RCB.....	3-SPEED
944 (J)	016 K	85 F	QL.....	5-SPEED
944 M220	016 K	85 F	4M.....	5-SPEED

TR201

LEGENDS AND NOTICES

IN COLUMN -S- STATUS

N	NEW ADDITION
P	PART ALREADY IN PROGRAMME, BUT NEW AT THIS APPLICATION
W	DELETED AT THIS APPLICATION, BUT CONTINUED TO BE CARRIED
A	STOCK TO BE USED UP
U	DELETED WITHOUT REPLACEMENT
*	PART ALSO OR ONLY AVAILABLE IN REPAIR KIT
>	ALSO AVAILABLE IN EXCHANGE

IN COLUMN - ILL. -

1	IDENTIFICATION NO. IN ILLUSTRATION
(1)	PART ONLY SIMILAR AS ILLUSTRATED
-	PART IS NOT ILLUSTRATED

FIG.-NUMBERS FOR WHICH THERE IS SHOWN NO TEXT ARE NOT VALID FOR THIS EDITION OF CATALOGUE

IN COLUMN -PART NUMBER/CODE-

000 000 000 00	PART NUMBER EQUALS ORDERING NO., IF A CODE IS SHOWN, IT WILL HAVE TO BE PART OF ORDERING NUMBER
AC3	COLOUR CODE

IN COLUMN -TEXT

INSTALLATION WIRH ENGINE OR CHASSIS NUMBER-RANGE

		EXAMPLE:
M 44F 01291 >>		FROM ENGINE NO.
F >> 94 FN40 01291		UP TO VIN

TR201

```
                    IN COLUMN  - A -
                    ----------------

                    IDENTIFICATION LETTER FOR PERIOD OF INSTALLATION
                    THAT IS REPEATED SEVERAL TIMES IN THE CATALOG GROUP.

                    EXPLANATION PLEASE FIND IN TEXT COLUMN OF THE CATALOG GROUP


                    IN COLUMN   - QU -   = NO. OF PIECES
                    ------------------------------------

          1         NUMBER PER APPLICATION

          X         NUMBER AS NEEDED

          *         AVAILABLE ONLY IN RUNNING LENGTHS   1 = 1 METRE


                    IN COLUMN   - MODEL/SYMBOL -
                    ----------------------------

        M650        OPTIONAL EQUIPMENT  -  SEE M-NO. LIST

         -85        LIMITATION OF MODEL YEAR FOR INSTANCE: VALID UP TO
                    END OF MODEL YEAR 1985

        /LL         LHD

        /RL         RHD
                    ---------+
        /V          FRONT    I
                             I
        /H          REAR     I
                             I---> APPLIES TO
        /L          LEFT     I     DIRECTION OF TRAVEL
                             I
        /R          RIGHT    I
                    ---------+

       AUT.         AUTOMATIC

        WW          THE PART CAN BE USED INSTEAD OF THE
                    PRECEDING ONE
```

TR203

EQUIPMENT BY COUNTRY REGULATIONS
==========

(A)	AUSTRIA
(AG)	THE GULF STATES
(AUS)	AUSTRALIA
(B)	BELGIUM
(CDN)	CANADA
(CH)	SWITZERLAND
(D)	FEDERAL REPUBLIC OF GERMANY
(DK)	DENMARK
(E)	SPAIN
(F)	FRANCE
(GB)	GREAT BRITAIN
(GR)	GREECE
(HK)	HONGKONG
(I)	ITALY
(J)	JAPAN
(L)	LUXEMBURG
(N)	NORWAY
(NL)	NETHERLANDS
(NS)	NEW ZEALAND
(P)	PORTUGAL
(RC)	TAIWAN
(S)	SWEDEN
(SA)	SAUDI ARABIA
(SF)	FINLAND
(USA)	UNITED STATES OF AMERICA